REV.	LERA LESLIE E. ROBERTSON ASSOCIATES, RLLP CONSULTING STRUCTURAL ENGINEERS	P	DRAWING NO.
		DRAFT	
		DESIGN	
		CHECK	

WTC
DRAWING
BOOK

12

CHAP. 1-2

Box 05A

Book 12

2 of 2

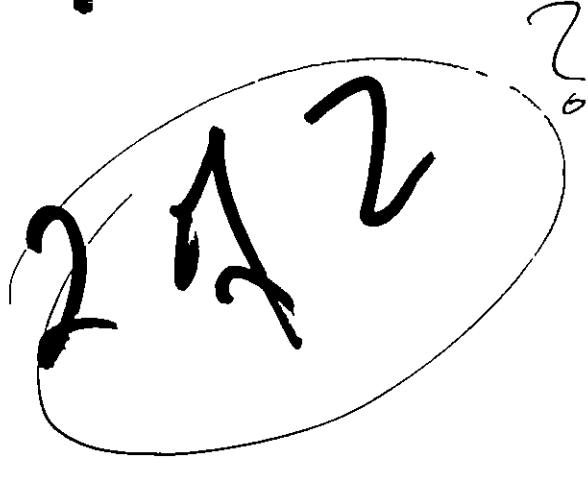

SKILLING, HELLE, CHRISTIANSEN, ROBERTSON — Structural & Civil Engineers

WTCI-34-LERA

PROJECT THE WORLD TRADE CENTER | TITLE DRAWING BOOK 12 | DATE 10/ 6/72

REVISIONS

TED
-/18/73

12-JO- 0.0	5/18/73	12-JK1- 74	3/21/69	12-JK1-171	10/15/68	12-JK2- 65	10/15/68	12-JK2-114	7/19/68
12-JK0- 0.1	5/18/73	12-JK1- 75	7/19/72	12-JK1-172	5/29/69	12-JK2- 66	7/19/68	12-JK2-115	7/19/68
12-JK1- 0	6/ 2/69	12-JK1- 75A	4/18/69	12-JK2- 2	7/19/68	12-JK2- 67	1/ 3/69	12-JK2-116	8/30/68
12-JK1-0.1	5/ 1/69	12-JK1- 75B	11/ 5/68	12-JK2- 3	7/19/68	12-JK2- 68	7/19/68	12-JK2-117	7/19/68
12-JK1- 2	7/19/68	12-JK1- 75C	3/21/69	12-JK2- 4	5/15/67	12-JK2- 69	5/ 1/68	12-JK2-118	7/19/68
12-JK1- 3	7/19/68	12-JK1- 76	7/19/68	12-JK2- 5	7/19/68	12-JK2- 70	7/19/68	12-JK2-118A	1/ 8/69
12-JK1- 4	7/19/68	12-JK1- 77	7/19/68	12-JK2- 8	7/19/68	12-JK2- 71	6/ 7/68	12-JK2-119	9/ 4/68
12-JK1- 30	7/19/68	12-JK1- 78	6/ 7/68	12-JK2- 9	7/19/68	12-JK2- 72	6/ 7/68	12-JK2-119A	6/ 7/68
12-JK1- 31	7/19/68	12-JK1- 79	6/ 7/68	12-JK2- 10	7/19/68	12-JK2- 73	1/ 3/69	12-JK2-120	1/ 3/69
12-JK1- 32	1/ 5/68	12-JK1- 80	9/ 4/68	12-JK2- 11	7/19/68	12-JK2- 74	5/ 1/68	12-JK2-121	11/ 5/68
12-JK1- 33	7/19/68	12-JK1- 81	6/11/68	12-JK2- 12	7/19/68	12-JK2- 75	1/ 3/69	12-JK2-121A	4/18/69
12-JK1- 34	7/19/68	12-JK1- 82	6/28/68	12-JK2- 13	11/ 5/68	12-JK2- 76	7/19/68	12-JK2-122	12/ 3/68
12-JK1- 35	6/28/68	12-JK1- 83	8/15/68	12-JK2- 14	11/ 5/68	12-JK2- 76A	5/ 1/68	12-JK2-123	7/19/68
12-JK1- 36	4/18/69	12-JK1- 84	5/29/69	12-JK2- 15	11/ 5/68	12-JK2- 77	1/ 6/69	12-JK2-124	7/19/68
12-JK1- 37	4/18/69	12-JK1- 85	3/21/69	12-JK2- 16	11/ 5/68	12-JK2- 78	5/ 1/68	12-JK2-125	5/ 1/68
12-JK1- 47	6/13/69	12-JK1- 99	10/15/68	12-JK2- 17	11/ 5/68	12-JK2- 78A	5/ 1/68	12-JK2-126	5/ 1/68
12-JK1- 48	6/13/69	12-JK1- 99A	10/15/68	12-JK2- 17A	11/ 5/68	12-JK2- 79	1/ 6/69	12-JK2-126A	1/20/69
12-JK1- 49	12/ 3/68	12-JK1-101	5/ 1/68	12-JK2- 17B	4/14/70	12-JK2- 80	5/ 1/68	12-JK2-126B	1/20/69
12-JK1- 50	1/ 5/68	12-JK1-102	5/ 1/68	12-JK2- 18	9/20/68	12-JK2- 81	1/ 6/69	12-JK2-127	7/19/68
12-JK1- 51	10/20/67	12-JK1-103	11/24/67	12-JK2- 19	9/20/68	12-JK2- 82	7/19/68	12-JK2-128	7/19/68
12-JK1- 52	10/20/67	12-JK1-104	1/ 5/68	12-JK2- 19A	4/18/69	12-JK2- 83	4/ 4/69	12-JK2-128A	1/20/69
12-JK1- 53	6/ 7/68	12-JK1-105	12/ 3/68	12-JK2- 20	9/20/68	12-JK2- 84	10/15/68	12-JK2-129	7/19/68
12-JK1- 54	11/24/67	12-JK1-106	1/ 5/68	12-JK2- 21	7/19/68	12-JK2- 85	1/ 6/69	12-JK2-130	6/28/68
12-JK1- 55	11/27/68	12-JK1-107	12/ 3/68	12-JK2- 22	7/19/68	12-JK2- 86	2/11/70	12-JK2-131	7/19/68
12-JK1- 56	11/27/68	12-JK1-108	5/ 1/68	12-JK2- 23	7/19/68	12-JK2- 87	7/19/68	12-JK2-132	1/ 8/69
12-JK1- 56A	10/15/68	12-JK1-109	12/ 3/68	12-JK2- 24	7/19/68	12-JK2- 88	7/19/68	12-JK2-133	1/ 8/69
12-JK1- 57	1/10/68	12-JK1-110	1/ 5/68	12-JK2- 25	7/19/68	12-JK2- 89	1/ 6/69	12-JK2-134	5/ 1/68
12-JK1- 58	2/16/68	12-JK1-111	6/28/68	12-JK2- 26	7/19/68	12-JK2- 90	7/19/68	12-JK2-135	7/19/68
12-JK1- 59	4/18/69	12-JK1-112	1/ 5/68	12-JK2- 27	7/19/68	12-JK2- 91	1/ 6/69	12-JK2-136	1/ 8/69
12-JK1- 60	3/21/69	12-JK1-113	1/10/68	12-JK2- 28	7/19/68	12-JK2- 92	2/19/69	12-JK2-137	1/ 8/69
12-JK1- 62	7/19/68	12-JK1-114	1/ 5/68	12-JK2- 29	7/19/68	12-JK2- 93	9/ 4/68	12-JK2-138	1/ 8/69
12-JK1- 63	7/19/68	12-JK1-115	1/10/68	12-JK2- 30	7/19/68	12-JK2- 94	7/19/68	12-JK2-139	6/28/68
12-JK1- 64	3/21/69	12-JK1-116	1/10/68	12-JK2- 31	7/19/68	12-JK2- 95	1/ 6/69	12-JK2-140	6/28/68
12-JK1- 65	1/ 5/68	12-JK1-117	6/28/68	12-JK2- 49	6/ 7/68	12-JK2- 96	1/ 6/69	12-JK2-141	6/ 7/68
12-JK1- 66	1/ 5/68	12-JK1-118	6/28/68	12-JK2- 50	1/ 3/69	12-JK2- 97	7/19/68	12-JK2-142	1/ 8/69
12-JK1- 67	5/29/69	12-JK1-119	10/15/68	12-JK2- 51	7/19/68	12-JK2- 98	7/19/68	12-JK2-143	6/ 7/68
12-JK1- 68	5/29/69	12-JK1-120	11/ 5/68	12-JK2- 52	1/ 3/69	12-JK2- 99	4/18/69	12-JK2-144	6/ 7/68
12-JK1- 69	2/19/69	12-JK1-121	11/27/68	12-JK2- 53	6/28/68	12-JK2-100	1/ 8/69	12-JK2-145	1/ 8/69
12-JK1- 69A	5/18/70	12-JK1-122	11/27/68	12-JK2- 53A	6/28/68	12-JK2-101	10/15/68	12-JK2-146	1/ 8/69
12-JK1- 70	5/26/69	12-JK1-130	1/ 3/69	12-JK2- 54	1/ 3/69	12-JK2-102	1/20/69	12-JK2-147	10/15/68
12-JK1- 70A	5/26/69	12-JK1-130A	3/21/69	12-JK2- 55	6/28/68	12-JK2-103	3/17/69	12-JK2-148	9/ 4/68
12-JK1- 70B	5/26/69	12-JK1-131	6/ 7/68	12-JK2- 56	1/ 3/69	12-JK2-104	1/ 8/69	12-JK2-149	10/15/68
12-JK1- 70L	10/13/69	12-JK1-132	12/17/68	12-JK2- 57	2/29/68	12-JK2-105	1/20/69	12-JK2-150	5/12/71
12-JK1- 70D	10/13/69	12-JK1-133	6/11/68	12-JK2- 58	1/ 3/69	12-JK2-106	7/19/68	12-JK2-151	6/ 6/69
12-JK1- 70F	5/26/70	12-JK1-135	2/19/69	12-JK2- 59	6/28/68	12-JK2-107	4/30/69	12-JK2-152	1/ 8/69
12-JK1- 70G	1/15/72	12-JK1-136	3/21/69	12-JK2- 60	1/ 3/69	12-JK2-108	4/30/69	12-JK2-153	2/11/70
12-JK1- 70H	3/10/72	12-JK1-137	2/19/69	12-JK2- 61	6/28/68	12-JK2-109	4/30/69	12-JK2-154	9/13/68
12-JK1- 71	3/21/69	12-JK1-138	9/13/68	12-JK2- 62	1/ 3/69	12-JK2-111	7/19/68	12-JK2-155	1/ 8/69
12-JK1- 72	3/21/69	12-JK1-139	12/ 3/68	12-JK2- 63	7/19/68	12-JK2-112	7/19/68		
12-JK1- 73	4/ 5/68	12-JK1-170	10/15/68	12-JK2- 64	1/ 3/69	12-JK2-113	7/19/68		

LICENSED PROFESSIONAL ENGINEER
LESLIE E. ROBERTSON
44360
STATE OF NEW YORK

12-JK0- 0

SKILLING, HELLE, CHRISTIANSEN, ROBERTSON — Structural & Civil Engineers

PROJECT	THE WORLD TRADE CENTER	TITLE	DRAWING BOOK 12	DATE	5/16/73

REVISIONS

12-JK2-156	11/ 5/69	12-JK3- 2	12/ 3/68	12-JK4- 2	9/16/69	12-JK5- 1	3/19/69	12-JK6- 1	1/ 6/70
12-JK2-157	12/ 3/68	12-JK3- 3	1/ 3/69	12-JK4- 3	9/16/69	12-JK5- 2	5/29/69		
12-JK2-158	1/ 8/69	12-JK3- 4	1/ 3/69	12-JK4- 4	9/16/69	12-JK5- 3	12/11/69		
12-JK2-159	10/15/68	12-JK3- 5	1/ 3/69	12-JK4- 5	4/ 7/72	12-JK5- 4	5/29/69	12-JK7- 3	5/26/72
12-JK2-159A	12/ 3/68	12-JK3- 6	12/ 3/68	12-JK4- 6	12/ 8/69	12-JK5- 5	3/19/69	12-JK7- 4	5/26/72
12-JK2-160	11/ 5/68	12-JK3- 7	1/ 3/69	12-JK4- 7	12/ 8/69	12-JK5- 6	3/19/69	12-JK7- 5	6/ 5/72
12-JK2-161	12/ 3/68	12-JK3- 8	12/ 3/68	12-JK4- 8	7/19/72	12-JK5- 7	3/19/69	12-JK7- 6	1/24/73
12-JK2-162	6/19/69	12-JK3- 9	1/ 3/69	12-JK4- 9	1/13/69	12-JK5- 8	3/19/69	12-JK7- 7	6/16/72
12-JK2-162A	6/19/69	12-JK3- 10	1/ 3/69	12-JK4- 10	1/13/69	12-JK5- 9	3/31/69	12-JK7- 8	1/24/73
12-JK2-162B	6/19/69	12-JK3- 11	1/ 3/69	12-JK4- 14	4/ 8/70	12-JK5- 10	3/19/69	12-JK7- 9	6/16/72
12-JK2-163	1/20/69	12-JK3- 12	1/ 3/69	12-JK4- 15	1/13/69	12-JK5- 11	5/29/69	12-JK7- 10	6/16/72
12-JK2-164	11/27/68	12-JK3- 13	1/ 3/69	12-JK4- 16	1/13/69			12-JK7- 11	6/16/72
12-JK2-165	2/19/69	12-JK3- 30	12/16/69	12-JK4- 17	10/23/69			12-JK7- 12	6/16/72
12-JK2-166	4/30/69	12-JK3- 50	12/17/68	12-JK4- 18	10/23/69			12-JK7- 13	6/16/72
12-JK2-167	12/17/68	12-JK3- 51	12/17/68	12-JK4- 18A	10/23/69			12-JK7- 14	1/24/73
12-JK2-168	2/19/69	12-JK3- 52	4/18/69	12-JK4- 19	10/23/69				
12-JK2-169	2/19/69	12-JK3- 53	4/18/69	12-JK4- 20	10/23/69			12-JK7- 20.1	5/26/72
12-JK2-170	5/29/69	12-JK3- 54	5/29/69	12-JK4- 21	10/23/69			12-JK7- 20.2	5/26/72
12-JK2-171	3/21/69	12-JK3- 55	12/17/68	12-JK4- 22	10/23/69			12-JK7- 21	5/26/72
12-JK2-172	3/21/69	12-JK3- 56	12/17/68						
12-JK2-173	3/12/69	12-JK3- 57	12/17/68						
12-JK2-174	3/12/69	12-JK3- 58	12/17/68						
12-JK2-175	4/18/69	12-JK3- 59	5/29/69						
12-JK2-176	4/ 8/70								
12-JK2-180.1	9/15/71								
12-JK2-180.2	9/15/71								
12-JK2-180.3	9/15/71								
12-JK2-180.4	9/15/71								
12-JK2-180.5	9/15/71								
12-JK2-180.6	1/15/72								
12-JK2-181	2/25/72								
12-JK2-182	4/ 7/72								
12-JK2-183	4/ 7/72								
12-JK2-184	6/ 9/72								
12-JK2-199	1/23/69								

LICENSED PROFESSIONAL ENGINEER
LESLIE E. ROBERTSON
1960
STATE OF NEW YORK

12-JK0- 0.1

SKILLING - HELLE - CHRISTIANSEN - ROBERTSON — Structural & Civil Engineers

PROJECT	TITLE	DATE
THE WORLD TRADE CENTER	DRAWING INDEX	5/15/67

REVISIONS

5-26-67
10-20-67
1- 5-68
1-29-68
2- 9-68
2-29-68
4- 5-68
5- 1-68
6- 7-68
6-11-68
6-28-68
7-19-68
8-15-68
9-13-68
9-20-68
10-15-68
11- 5-68
11-27-68
12- 3-68
12-17-68
1- 3-69
2- 3-69
3- 3-69
3-21-69
4- 1-69
5- 1-69
6- 2-69

LICENSED PROFESSIONAL ENGINEER — LESLIE E. ROBERTSON — No. 34360 — UNIVERSITY OF THE STATE

DRAWING NO. BOOK 12	TITLE
12-JK1-0	Drawing Index
12-JK1-2 thru 4	Typical Beam to Column Connection
12-JK1-30 thru 34	Typical Beam to Girder Connection
12-JK1-35	Typical Detail of Beam Support Over Top of Perimeter Wall
12-JK1-36 & 37	Beam Support over Top of Perimeter Wall
12-JK1-49 thru 52	Beam Connection Details
12-JK1-53 thru 56 & 56A	Beam to Column Connection for Columns Within Refrigeration Room Area
12-JK1-57	Connection Detail at Column K31-9 & K31-10
12-JK1-58	Connection Detail at Column J-15-5
12-JK1-59, 60, 62 thru 66	Beam Connection Details
12-JK1-67 & 68	Beam to Column Connection Where Column Splice 3" Above Floor
12-JK1-69, 69A, 70, 70A thru 70F	Detail of Elevator Separator Beams and Bumper Beams
12-JK1-71 & 72	Beam Detail Under Existing Telephone Manhole
12-JK1-73 thru 77 & 83	Detail of Posts, Hangers & Beam Connection Details
12-JK1-78	Floor Beam Diaphragm Details
12-JK1-79 thru 82, 84, 85, 99 & 99A	Beam Connection Details
12-JK1-101	Beam Connection Detail to North of Tower A, A-101 thru A-108
12-JK1-102	Beam Connection Detail to East of Tower A, A-201 thru A-205
12-JK1-103	Beam Connection Detail to South of Tower A, A-301 thru A-310
12-JK1-104	Beam Connection Detail to West of Tower A, A-401 thru A-408
12-JK1-105	Beam Connection Detail to Tower - Type A & A1
12-JK1-106	Beam Connection Detail to Tower - Type B & C
12-JK1-107 & 108	Schedule for Beam Connection to Tower A
12-JK1-109	Beam Connection to Tower A, A-104
12-JK1-110	Beam Connection to Tower A, A-310
12-JK1-111 thru 122	Beam Connection to Tower A
12-JK1-130 & 139	Beam Connection Detail to Tower B
12-JK1-130A	Beam Connection Detail to West of Tower B - B-101 thru B-116
12-JK1-131	Beam Connection Detail to North of Tower B - B-201 thru B-207
12-JK1-132	Beam Connection Detail to East of Tower B - B-301 thru B-309
12-JK1-133	Beam Connection Detail to South of Tower B - B-401 thru B-409
12-JK1-135	Beam Connection Detail to Tower - Type D
12-JK1-136	Schedule for Beam Connection to Tower B
12-JK1-137	Schedule for Beam Connection to Tower B
12-JK1-138	Bracket Support at Exterior Face of Tower
12-JK1-170 thru 172	Bracket Detail

9- 4-68
9-13-68
9-20-68
10-15-68
11- 5-68
11-11-68
11-27-68
12- 3-68
12-17-68
12-19-68
1- 3-69
1- 8-69
1-13-69
2- 3-69
3- 3-69
-12-69
3-18-69
3-21-69
4- 1-69
5-1-69

DRAWING NO. BOOK 12	TITLE
12-JK2-2 thru 5	Typical Beam Details
12-JK2-8 thru 19A	Schedule for Shear Connectors
12-JK2-20	Shear Stud Connector Table Format
12-JK2-21 thru 31	Shear Stud Connector Tables
12-JK2-49	Beam & Girder Details - Sprinkler Pipe Holes
12-JK2-50 thru 109, 111 thru 149	Girder Details
12-JK2-104	Plate Girder Welding Schedule
12-JK2-150	North Projection Exhaust Housing Details
12-JK2-152	Detail of Plate Girder
12-JK2-153 & 154	Detail of Beams Adjacent to Stairway
12-JK2-155 & 156	Detail of Plate Girder
12-JK2-157 thru 159A	Temporary Structure
12-JK2-160	Girder Detail
12-JK2-161 thru 164	Beam Details
12-JK2-165 thru 175	Detail of Plate Girder
12-JK2-199	Detail for Notching Beam already in Place
12-JK3-2 thru 13	Construction Joint Details
12-JK3-50 thru 59	Utility Supports Along East Perimeter Wall
12-JK4-2 & 3	Moment Connection Schedule at El. 332
12-JK4-4	Girder to Col. Flange & Web Moment Conn. Detail
12-JK4-5 & 6	Beam Connection Detail to Tower (El. 332)
12-JK4-9 & 10	Beam to Column Connection
12-JK4-15 & 16	Connection Detail for Col. J14-7 (El. 332)
12-JK5-1 thru 11	Beam Connections to Slurry Wall

LICENSED PROFESSIONAL ENGINEER
LESLIE E. ROBERTSON
No. 34360
STATE OF NEW YORK

SKILLING - HELLE - CHRISTIANSEN - ROBERTSON — Structural & Civil Engineers

PROJECT THE WORLD TRADE CENTER | TITLE TYPICAL BEAM TO COLUMN CONNECTION | DATE 10-29-67

REVISIONS
11-24-67
1-5-68
7-19-68

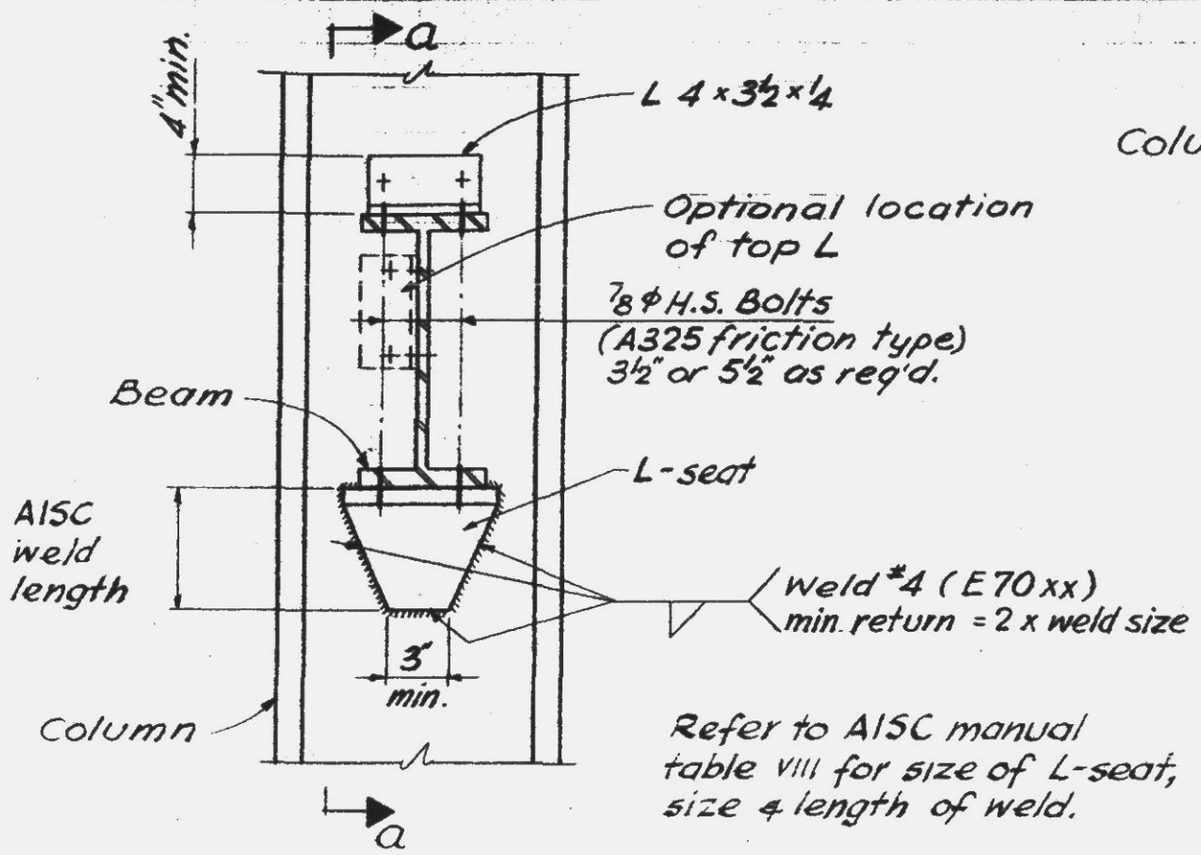

Refer to AISC manual table VIII for size of L-seat, size & length of weld.

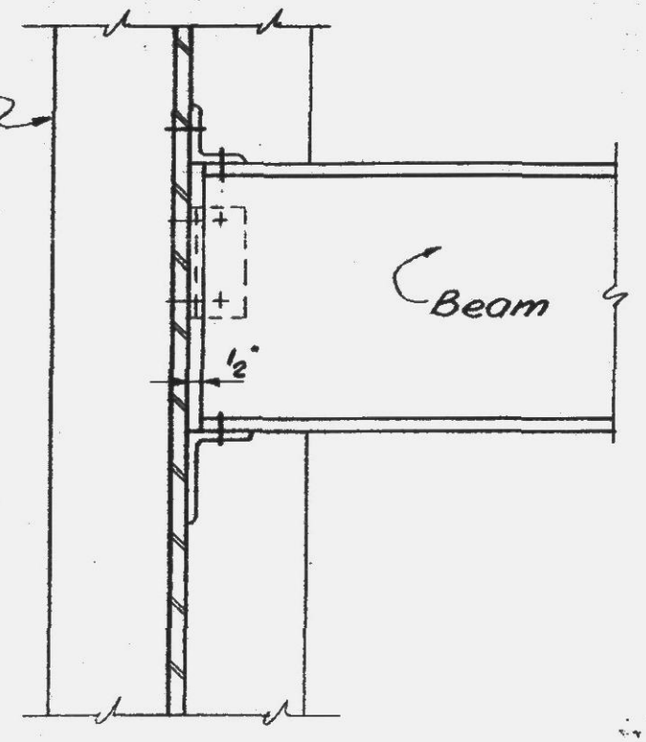

SECTION a-a

ANGLE - SEAT CONNECTION TO COLUMN - WEB

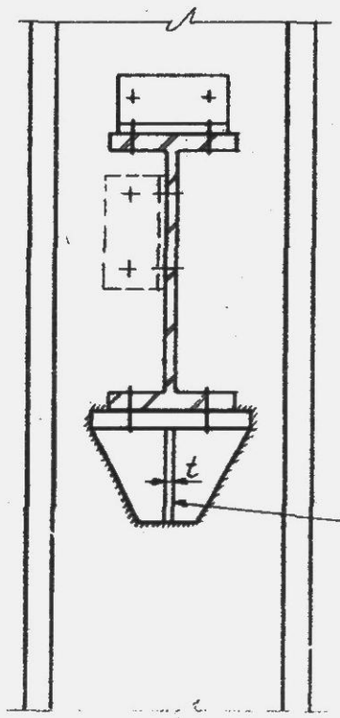

Stiffener
$t \geq$ beam web thickness (A-36)
$\geq 1.4 \times$ beam web thickness ($F_y \geq 42$ KSI ≤ 50 KSI)
$\geq 1.66 \times$ beam web thickness ($F_y = 60$ KSI)

OPTION

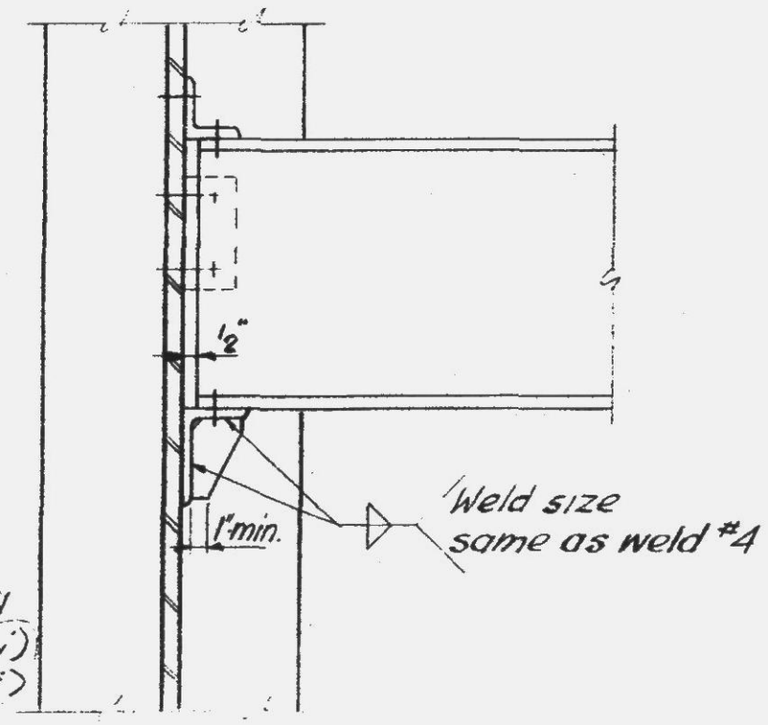

LICENSED PROFESSIONAL ENGINEER
LESLIE E. ROBERTSON
No. 34360
STATE OF NEW YORK

12-JK1-2

SKILLING, HELLE, CHRISTIANSEN, ROBERTSON — Structural & Civil

PROJECT THE WORLD TRADE CENTER — TYPICAL BEAM TO COLUMN CONNECTION — OCT. 10, 20, 67

REVISIONS
11-24-67
1-5-68
6-28-68
7-19-68

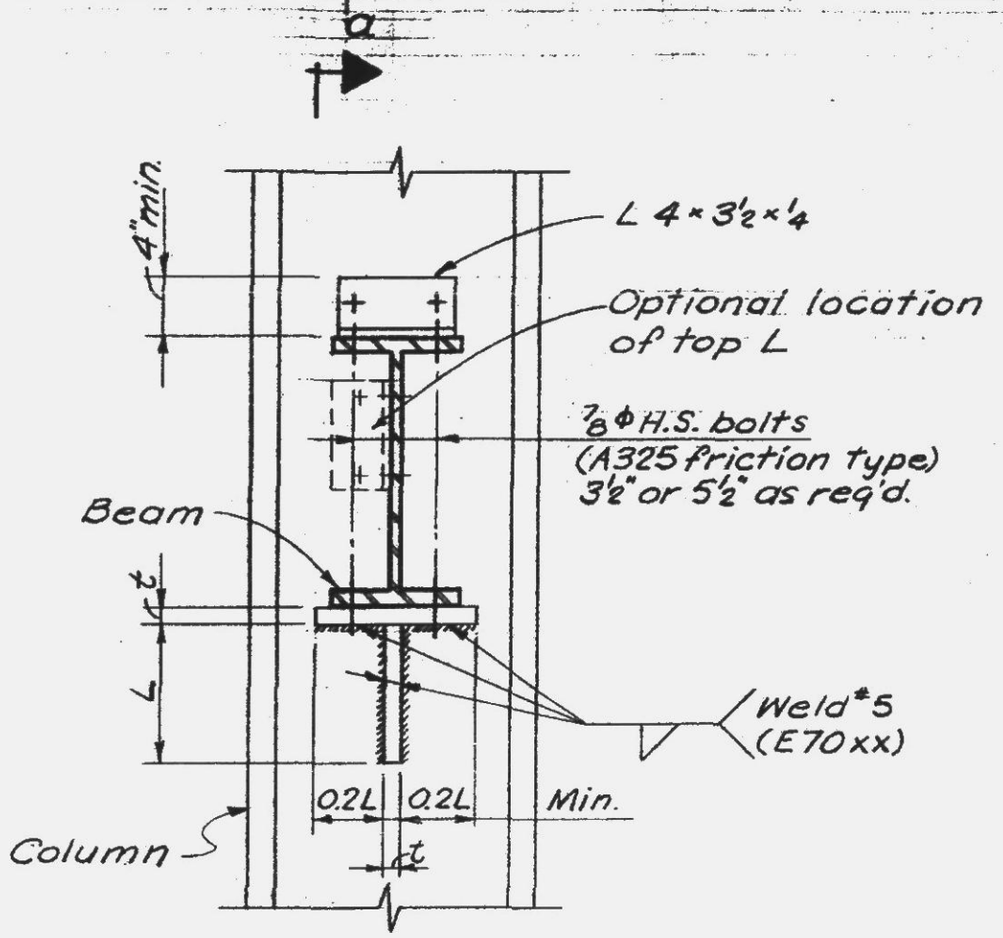

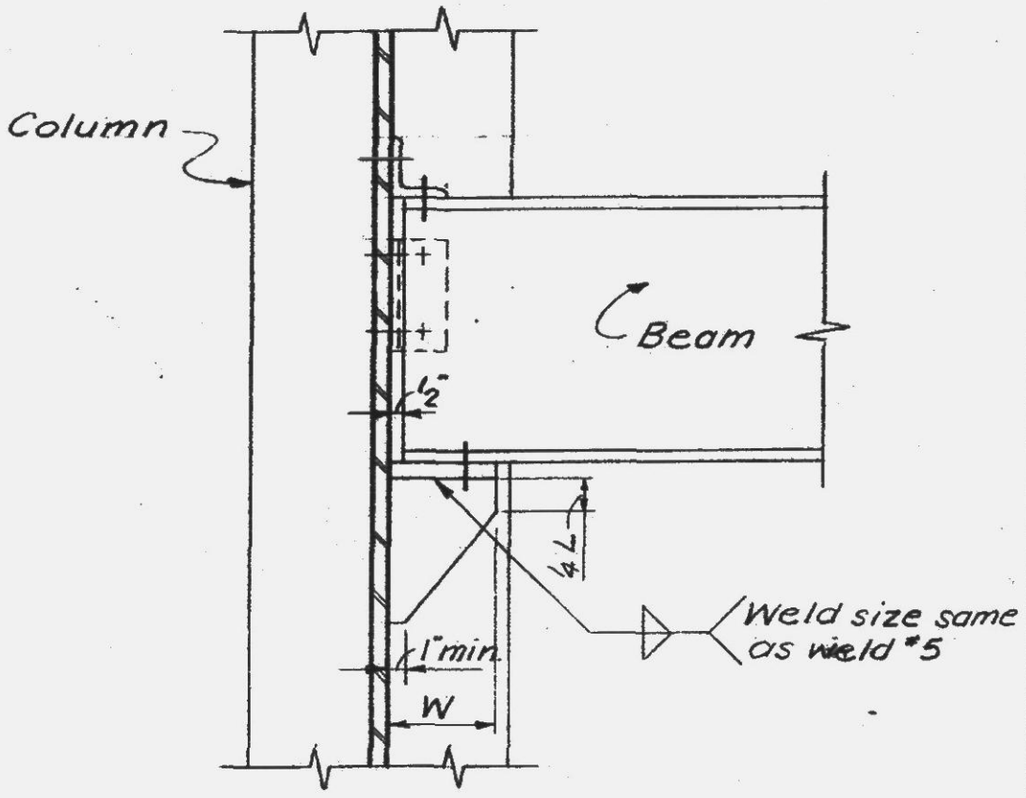

SECTION a-a

Refer to AISC manual Table X for size of seat, size & length of welds.

Min. t ≥ beam web thickness (A-36)
≥ 1.4 × beam web thickness (Fy ≥ 42 KSI ≤ 50 KSI)
≥ 1.66 × beam web thickness (Fy = 60 KSI)

Struct. tees cut from WF may be used in place of a two-plate seat. But the thickness of flange and web of such WF should be equal or greater than the min. t stated above.

STIFFENED SEATED CONNECTION TO COLUMN-WEB

LESLIE E. ROBERTSON — LICENSED PROFESSIONAL ENGINEER — No. 34960 — STATE OF NEW YORK

12-JK1-3

SKILLING · HELLE · CHRISTIANSEN · ROBERTSON

PROJECT THE WORLD TRADE CENTER — STEEL BEAM TO COLUMN CONNECTION — DATE 10-20-67

REVISIONS

7-19-68

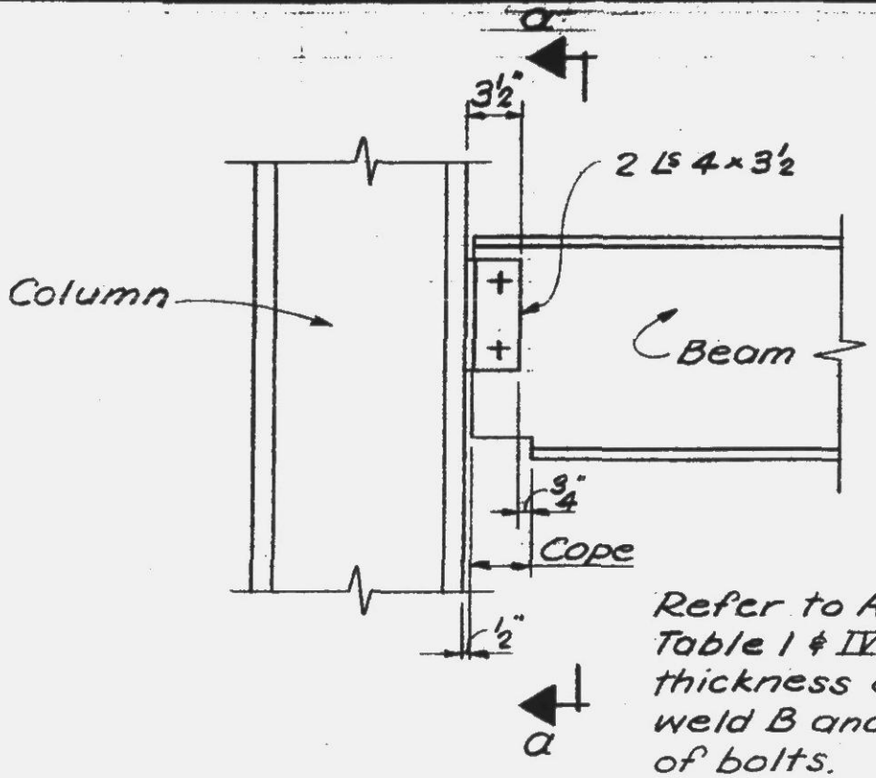

Refer to AISC manual Table I & IV for length & thickness of Ls, size of weld B and number of bolts.

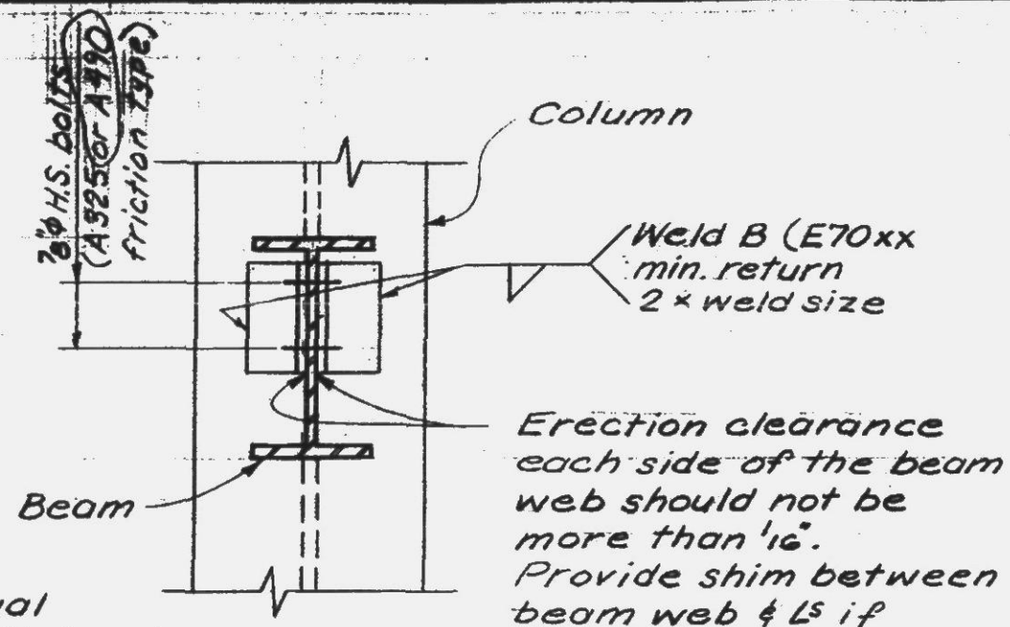

SECTION a-a

Erection clearance each side of the beam web should not be more than 1/16". Provide shim between beam web & Ls if necessary to insure surface contact for H.S. bolts.

CONNECTION TO COLUMN-FLANGE

LESLIE E. ROBERTSON — No. 34360 — LICENSED PROFESSIONAL ENGINEER — STATE OF NEW YORK

12-JK1-4

SKILLING, HELLE, CHRISTIANSEN, ROBERTSON — STRUCTURAL CIVIL Engineers

PROJECT [illegible] | TYPICAL BEAM-TO-GIRDER CONNECTION | DATE 10-20-67

REVISIONS
2-16-68
7-19-68

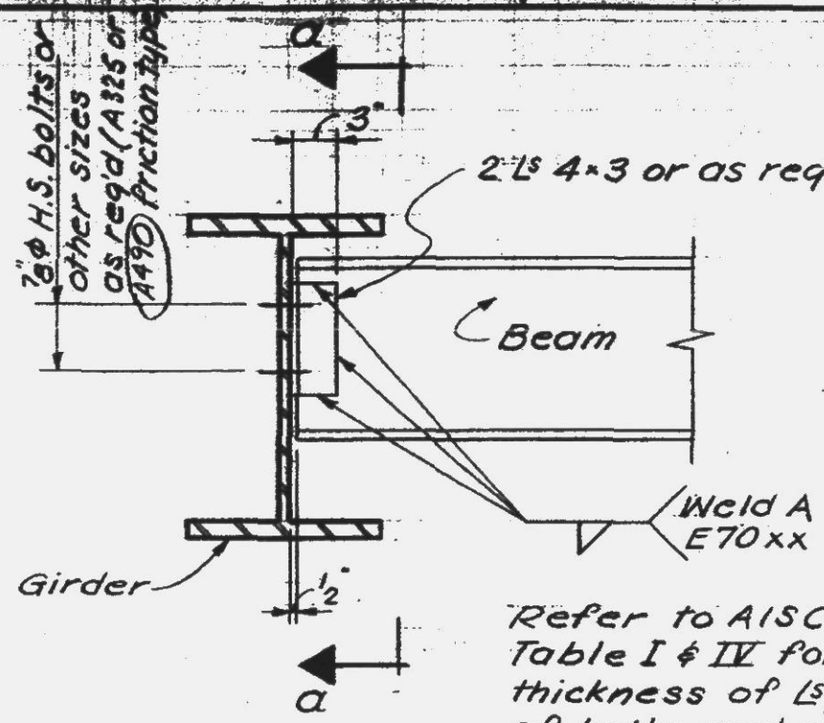

Refer to AISC manual Table I & IV for length & thickness of Ls, number of bolts and size of weld A.

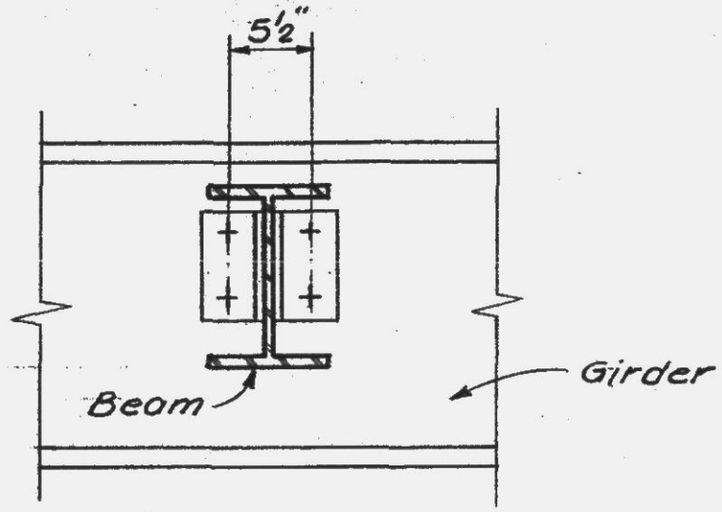

SECTION a-a

WHERE TOP OF BEAM IS LOWER THAN TOP OF GIRDER

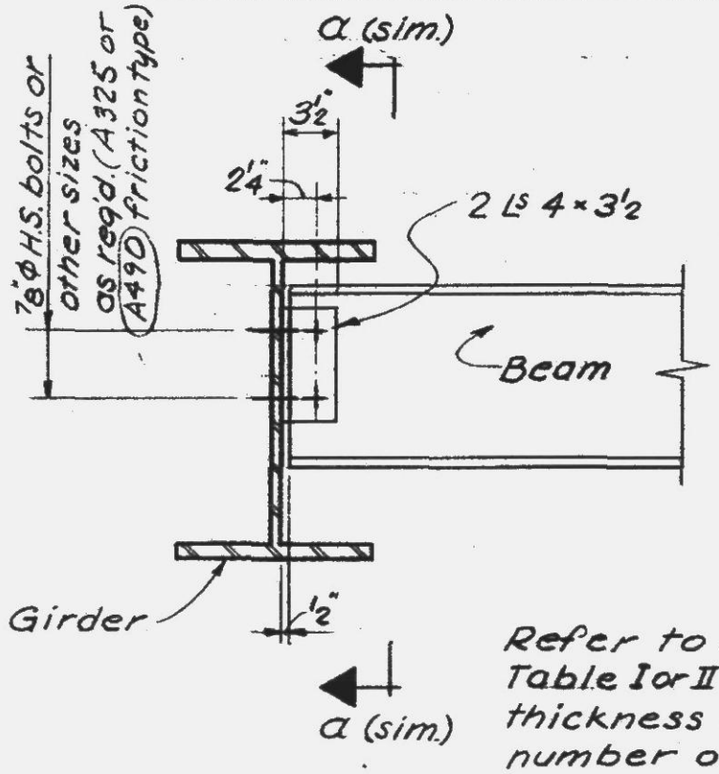

Refer to AISC manual Table I or II for length & thickness of Ls and number of bolts.

OPTION

LICENSED PROFESSIONAL ENGINEER — LESLIE E. ROBERTSON — No. 34360 — UNIVERSITY OF THE STATE OF NEW YORK

12-JK1-30

Skilling, Helle, Christiansen, Robertson — Structural & Civil Engineers

PROJECT: THE JACKSON [illegible]

TYPICAL BEAM TO GIRDER CONNECTION

DATE: 10-20-67

REVISIONS
2-16-68
7-19-68

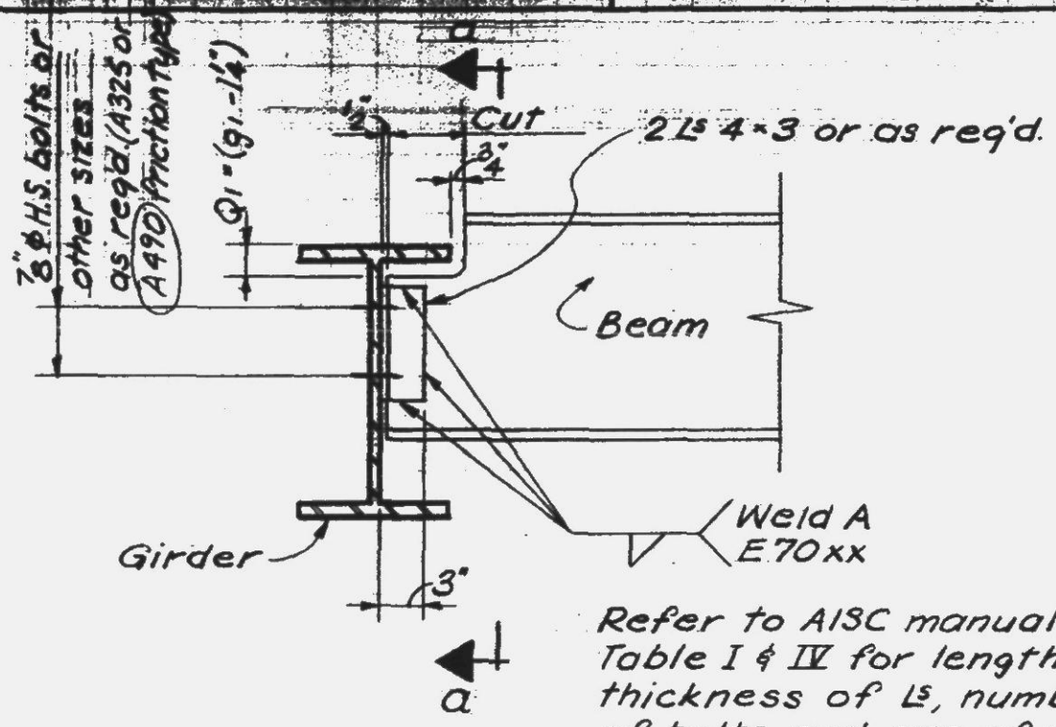

Refer to AISC manual Table I & IV for length & thickness of Ls, number of bolts and size of weld A.

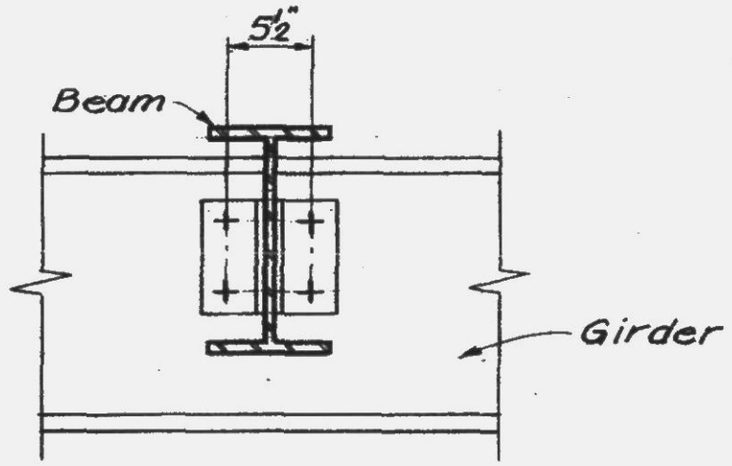

SECTION a-a

WHERE TOP OF BEAM IS SAME OR LESS THAN 6" HIGHER THAN TOP OF GIRDER

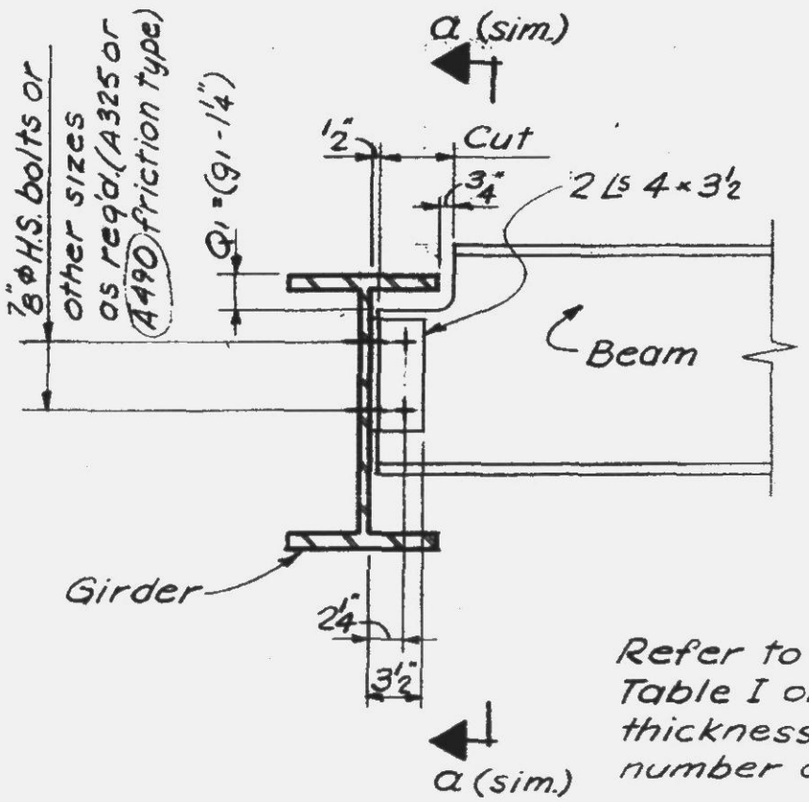

Refer to AISC manual Table I or II for length & thickness of Ls and number of bolts.

OPTION

LICENSED PROFESSIONAL ENGINEER
LESLIE E. ROBERTSON
No. 34360
STATE OF NEW YORK

12-JK1-31

SKILLING - HELLE - CHRISTIANSEN - ROBERTSON Structural & Civil Engineers

PROJECT: THE WORLD TRADE CENTER | TITLE: TYPICAL BEAM TO GIRDER CONNECTION | DATE: 10-20-67

REVISIONS

1-5-68

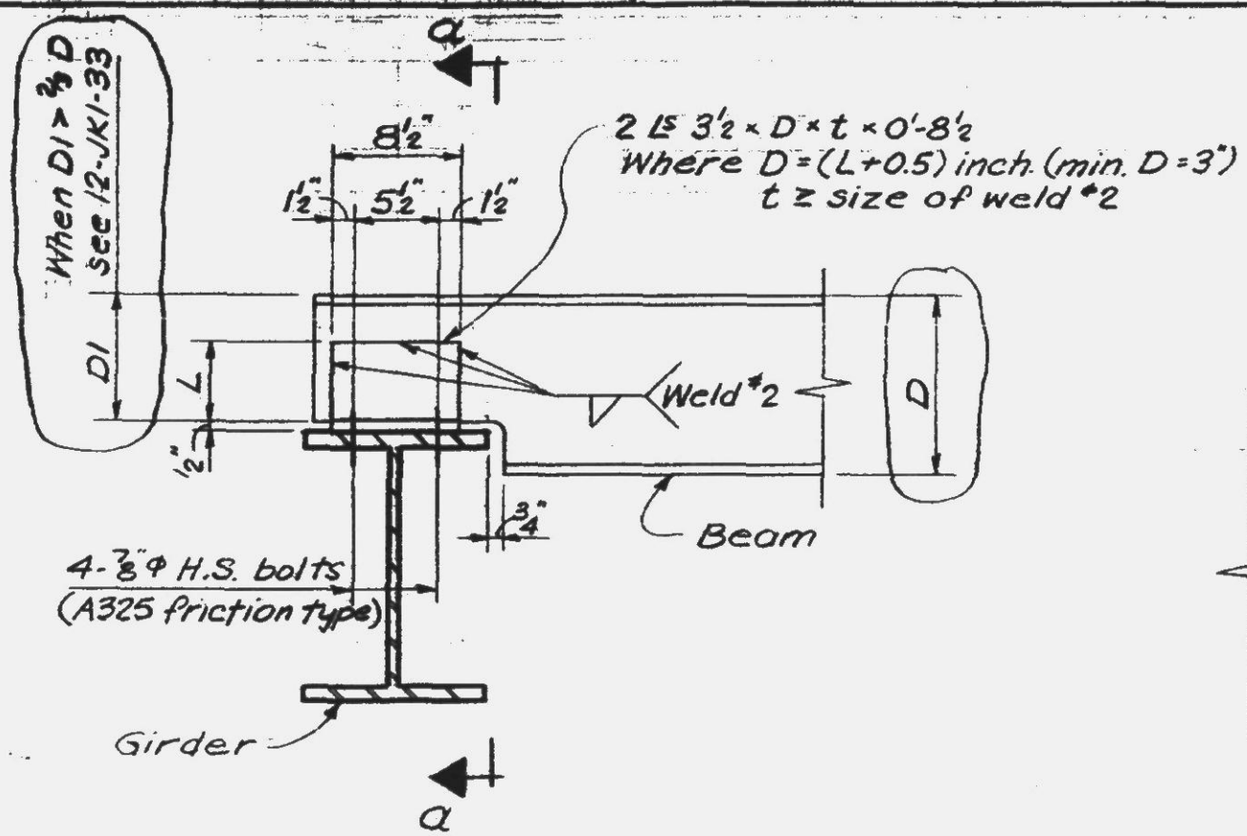

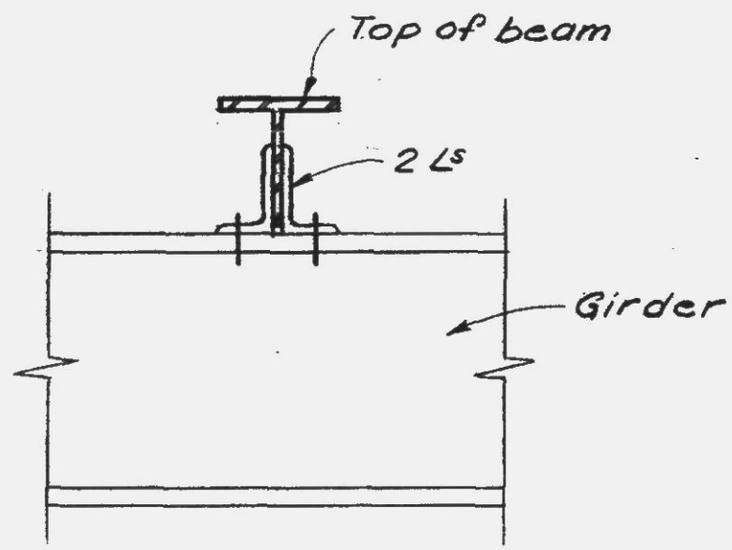

SECTION a-a

$$L\ (\text{inch.}) = \tfrac{1}{2}\left(\frac{\text{Reaction}}{1.4B} - 8.5\right)$$

Min. L = 2½"

Where B = is the number of sixteenths in the weld size

WHERE TOP OF BEAM IS MUCH HIGHER THAN TOP OF GIRDER

LESLIE E. ROBERTSON No. 34360 STATE OF NEW YORK

12-JKI-32

SKILLING - HELLE - CHRISTIANSEN - ROBERTSON — Structural & Civil Engineers

PROJECT: THE WORLD TRADE CENTER | TITLE: TYPICAL BEAM TO GIRDER CONNECTION | DATE: 1-4-68

REVISIONS

7-19-68

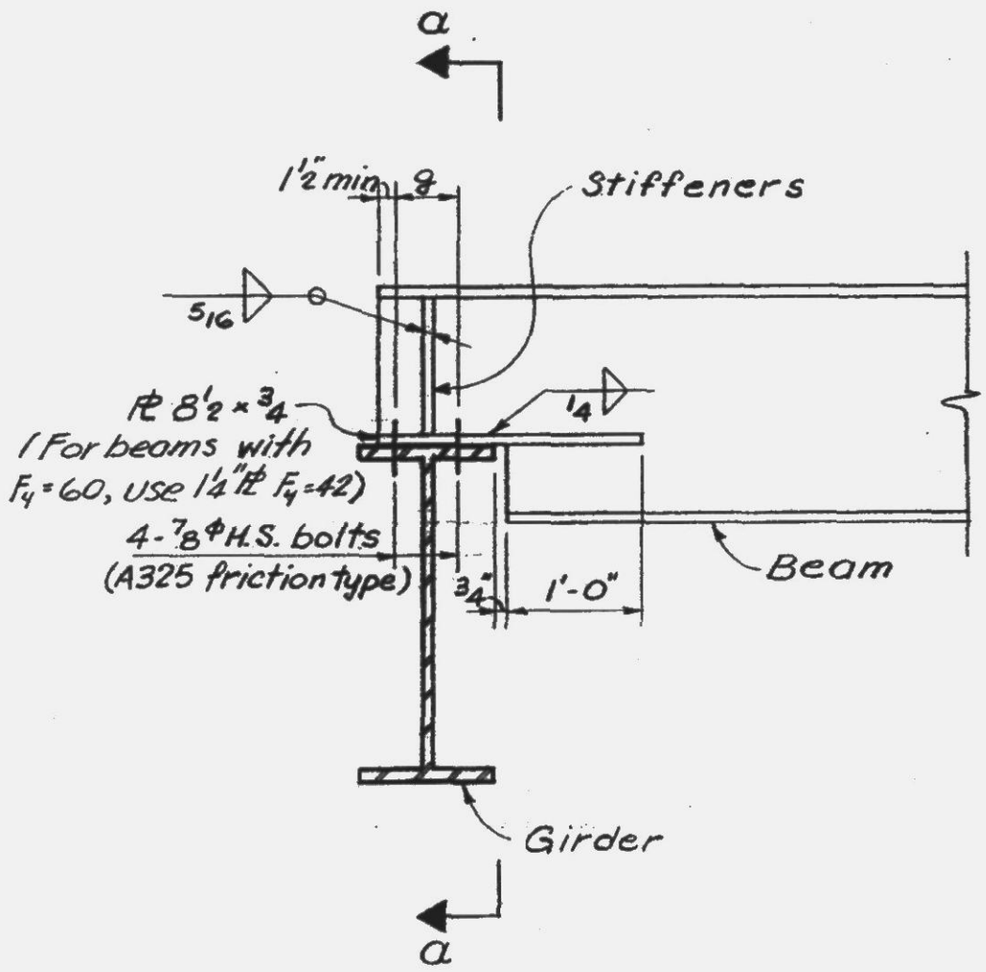

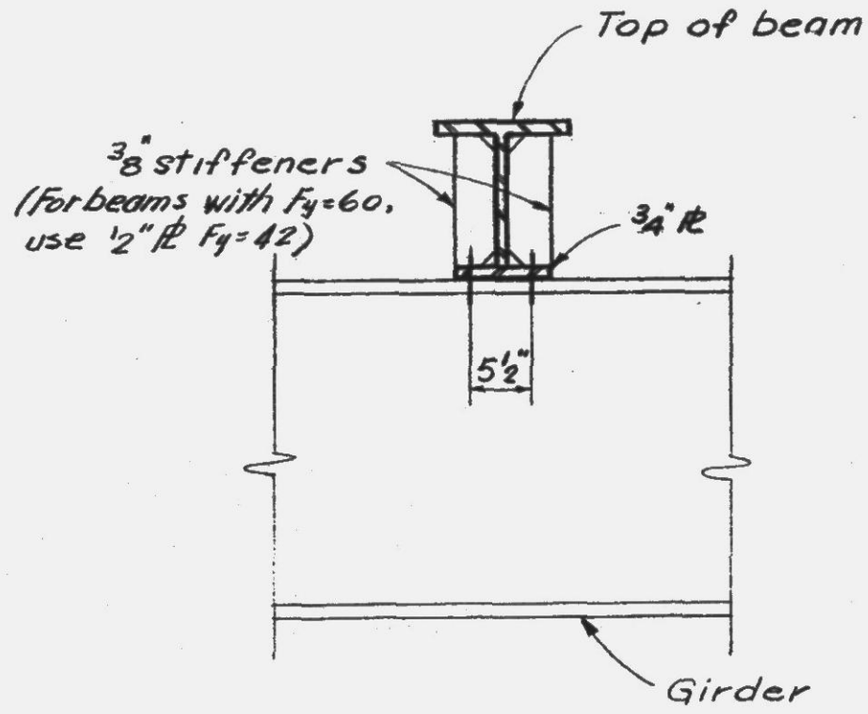

Section a-a

LICENSED PROFESSIONAL ENGINEER
LESLIE E. ROBERTSON
No. 34350
STATE OF NEW YORK

12-JK1-33

SKILLING - HELLE - CHRISTIANSEN - ROBERTSON — Structural & Civil Engineers

PROJECT THE WORLD TRADE CENTER — SHEET TYPICAL BEAM TO GIRDER CONNECTION — JOB

REVISIONS

7-19-68

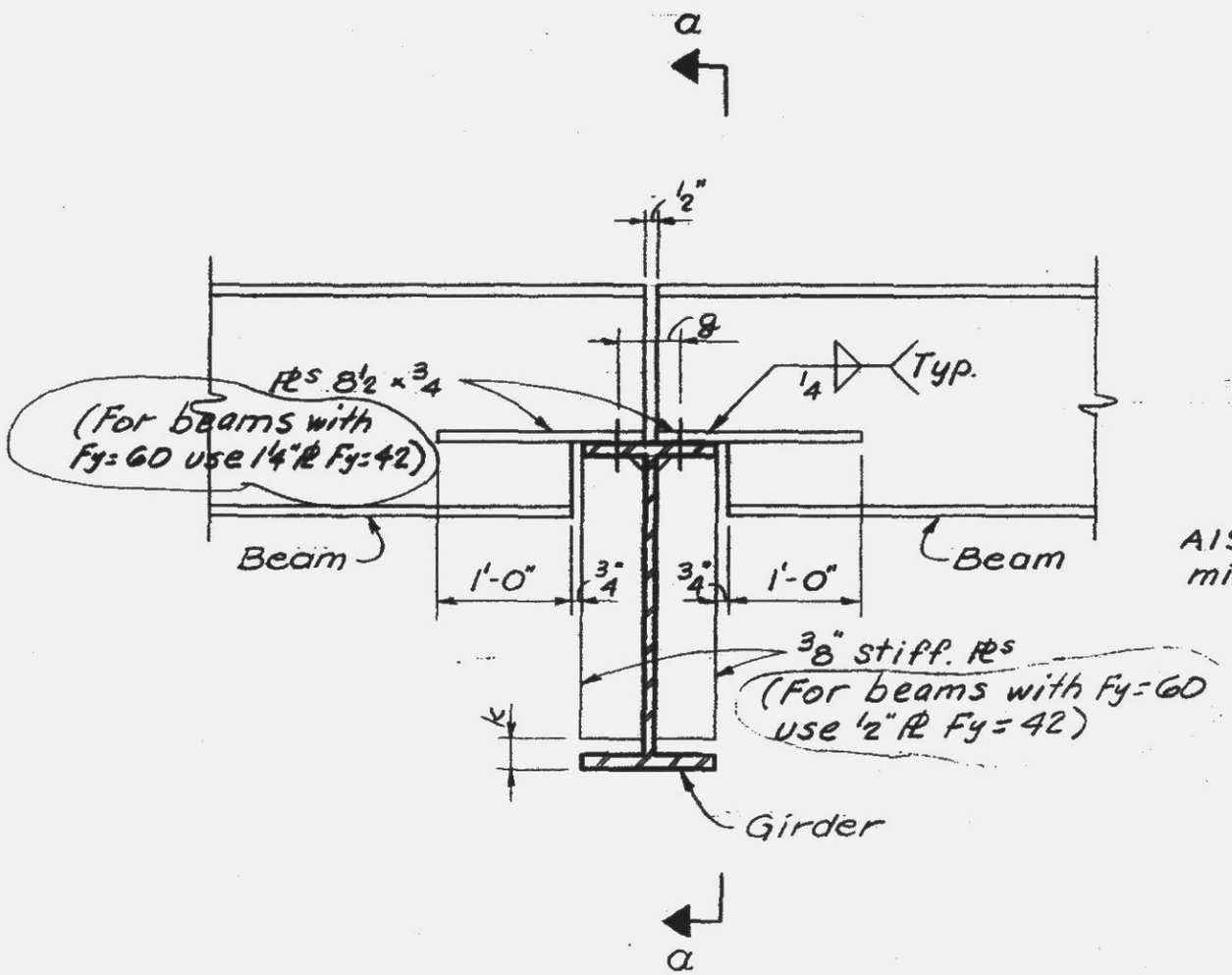

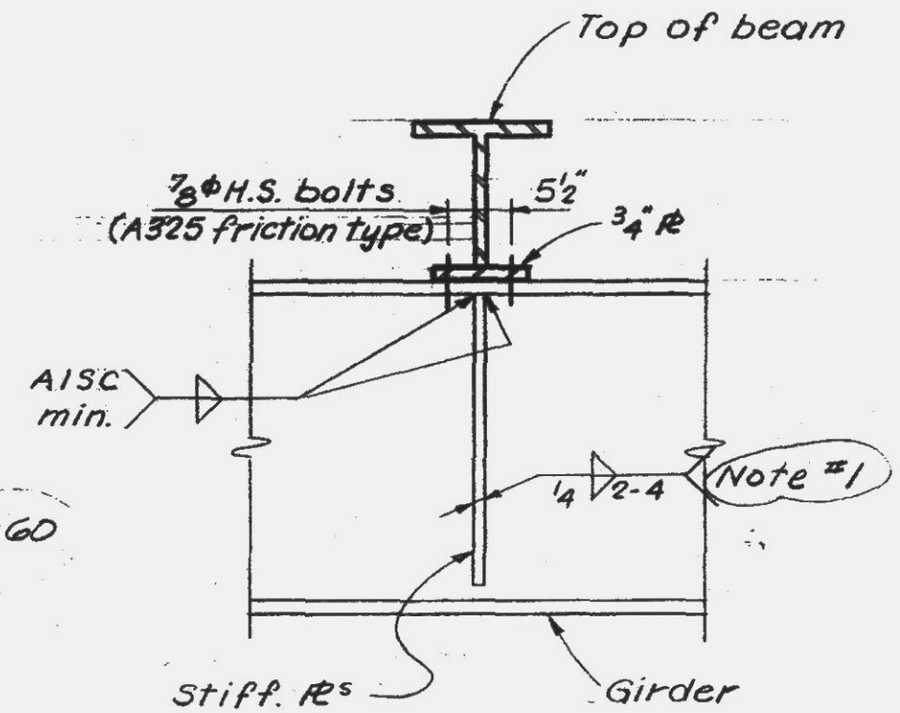

Section a-a

Note:
1. For beams with Fy=60 use 5/16 weld.

LICENSED PROFESSIONAL ENGINEER
LESLIE E. ROBERTSON
No. 34360
UNIVERSITY OF THE STATE OF NEW YORK

12-JK1-34

REVISIONS

5-1-68

6-7-68

6-28-68

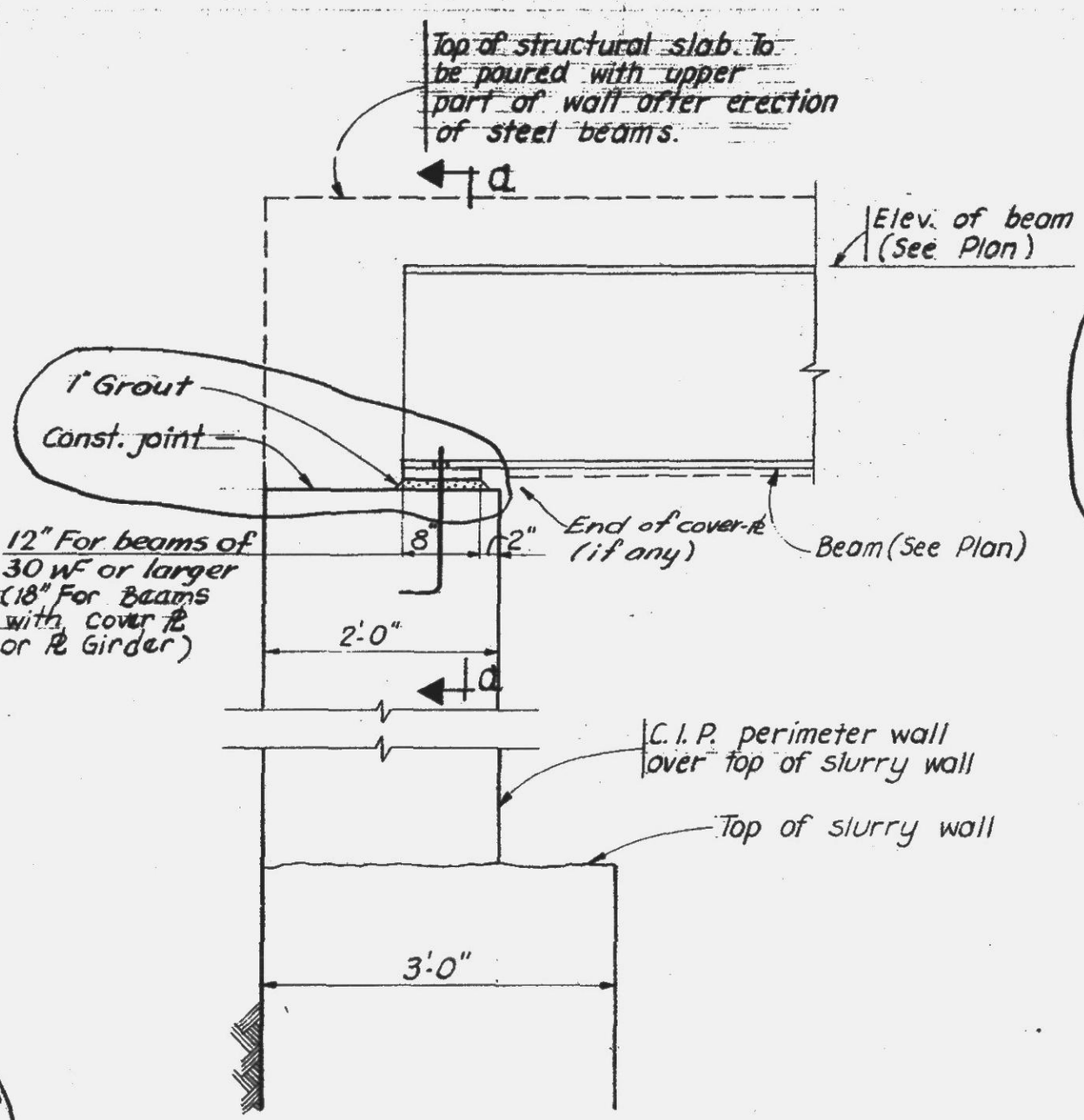

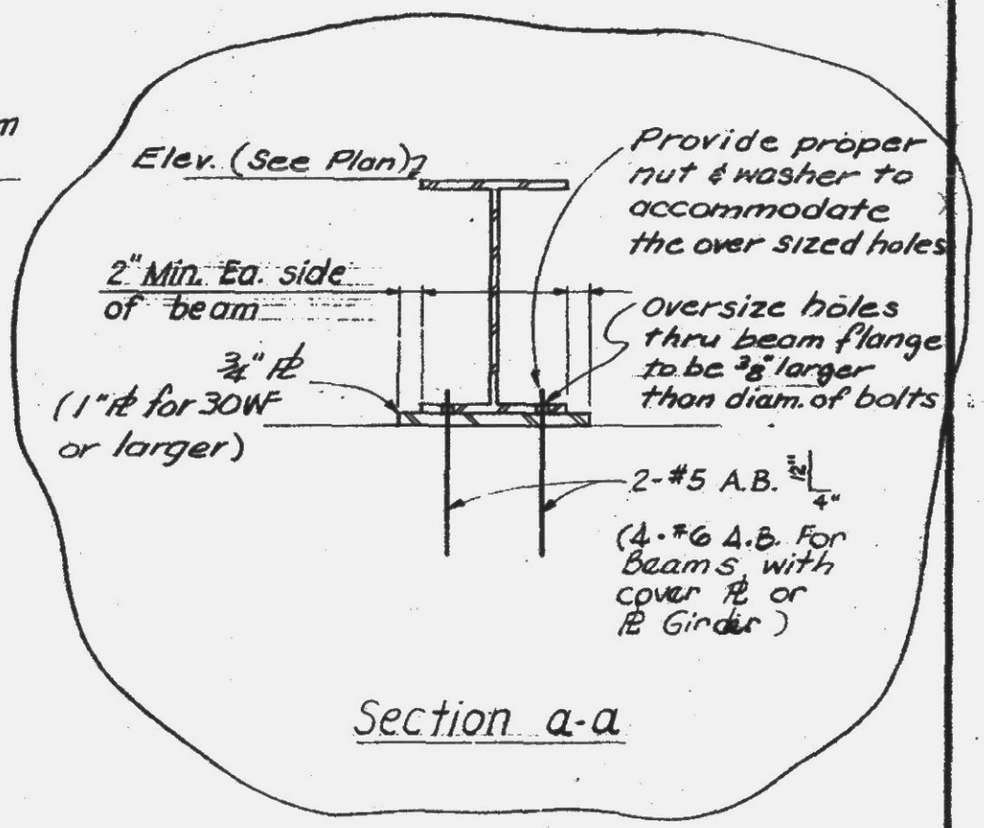

Section a-a

LICENSED PROFESSIONAL ENGINEER
LESLIE E. ROBERTSON
No. 34360
UNIVERSITY OF THE STATE OF NEW YORK

12-JK1-35

SKILLING, HELLE, CHRISTIANSEN, ROBERTSON — Structural & Civil Engineers

PROJECT: THE WORLD TRADE CENTER | TITLE: BEAM SUPPORT OVER TOP OF PERIMETER WALL | DATE: 4-18-69

REVISIONS

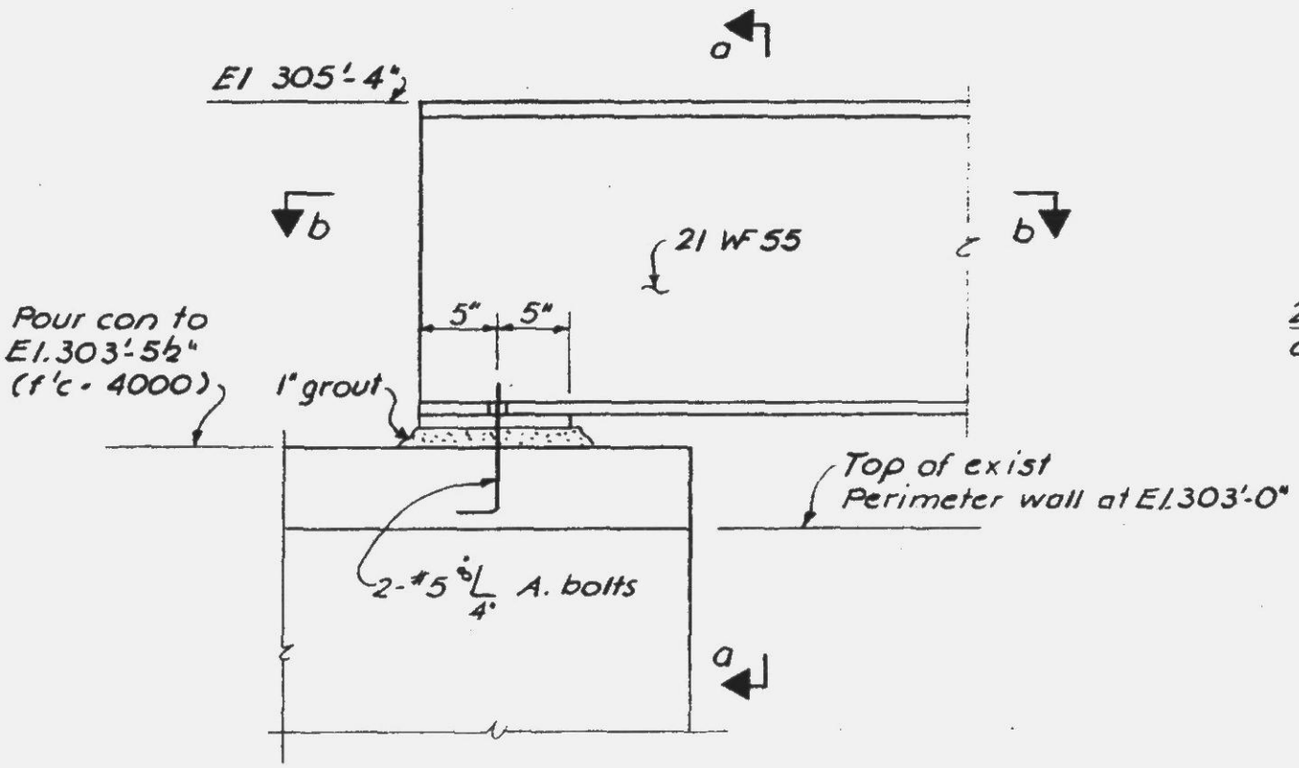

ELEVATION

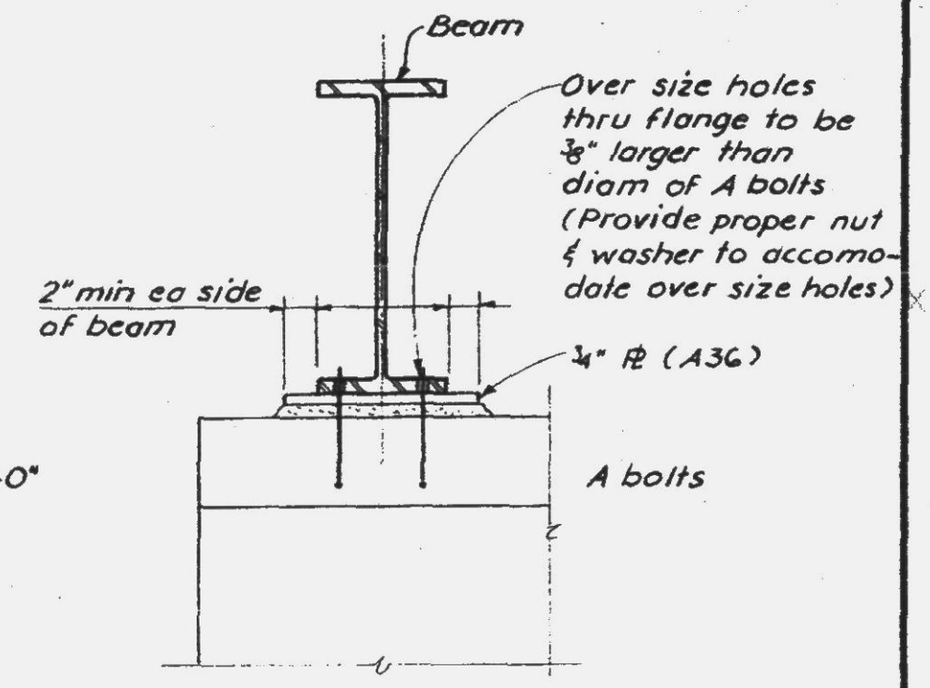

Section a-a

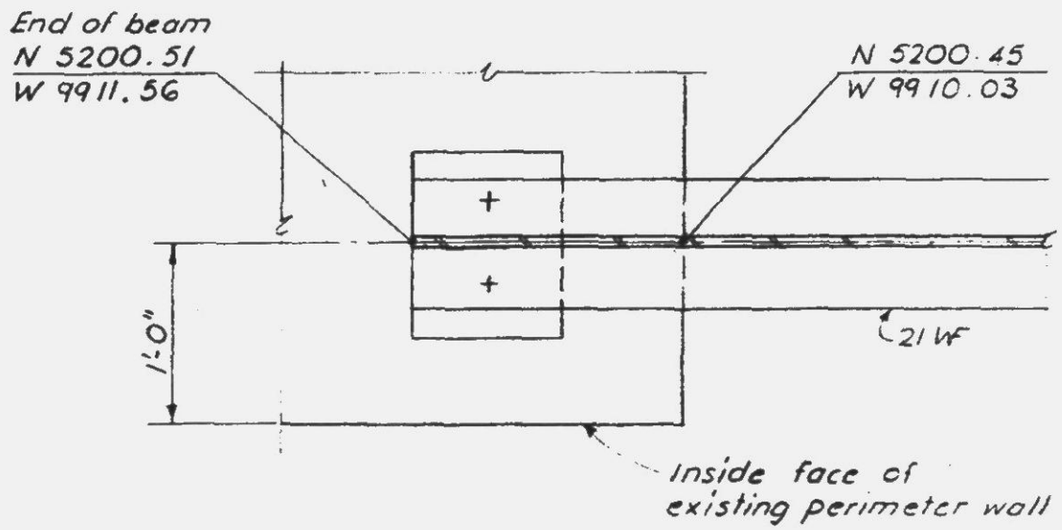

Section b-b

LICENSED PROFESSIONAL ENGINEER
LESLIE E. ROBERTSON
No. 34360
UNIVERSITY OF THE STATE OF NEW YORK

DESIGNED

DRAWN
F. Smith

REVIEWED
E.L.

12-JK1-36

SKILLING, HELLE, CHRISTIANSEN, ROBERTSON — Structural & Civil Engineers

PROJECT: THE WORLD TRADE CENTER | TITLE: BEAM SUPPORT OVER TOP OF PERIMETER WALL | DATE: 4-18-69

REVISIONS

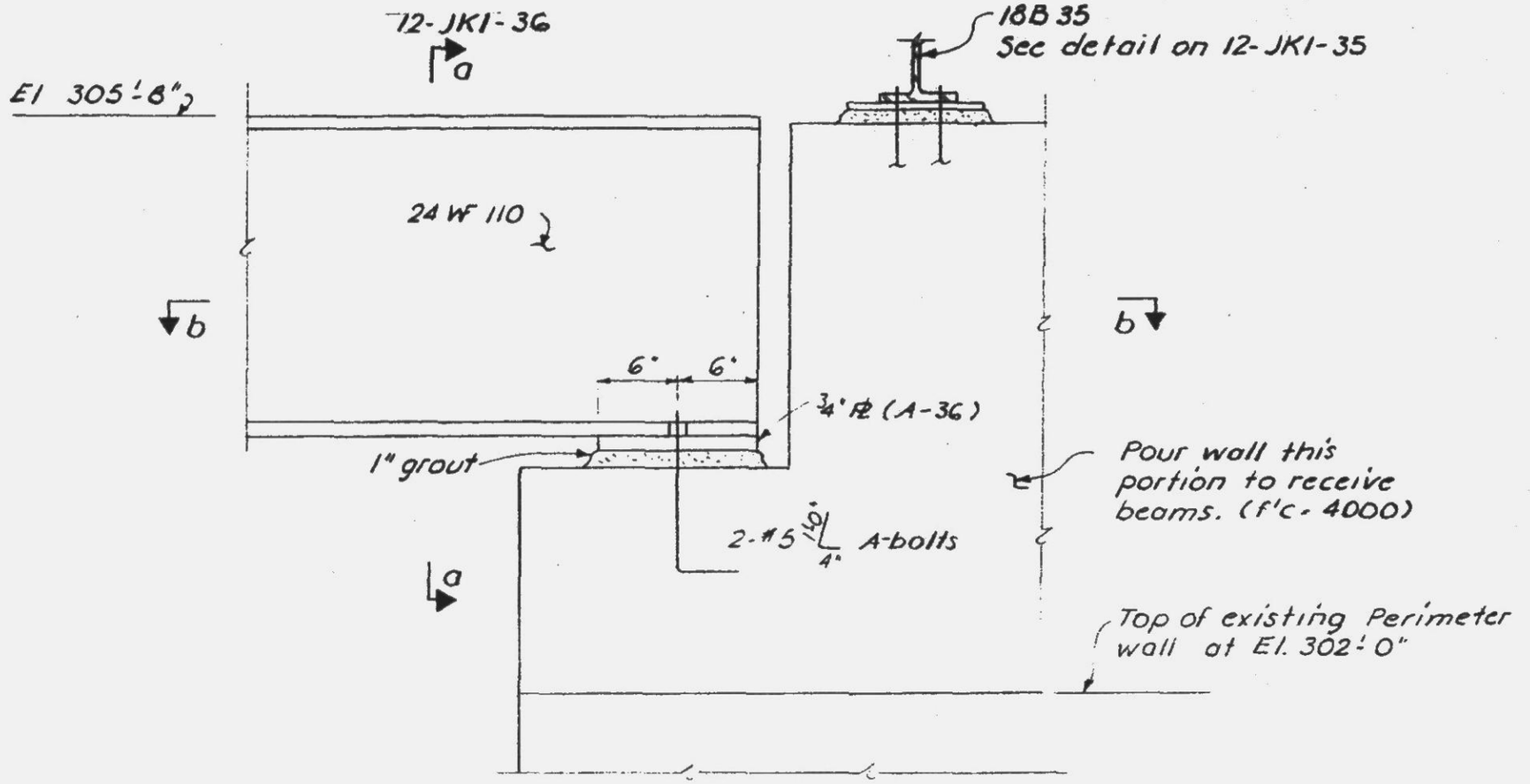

ELEVATION

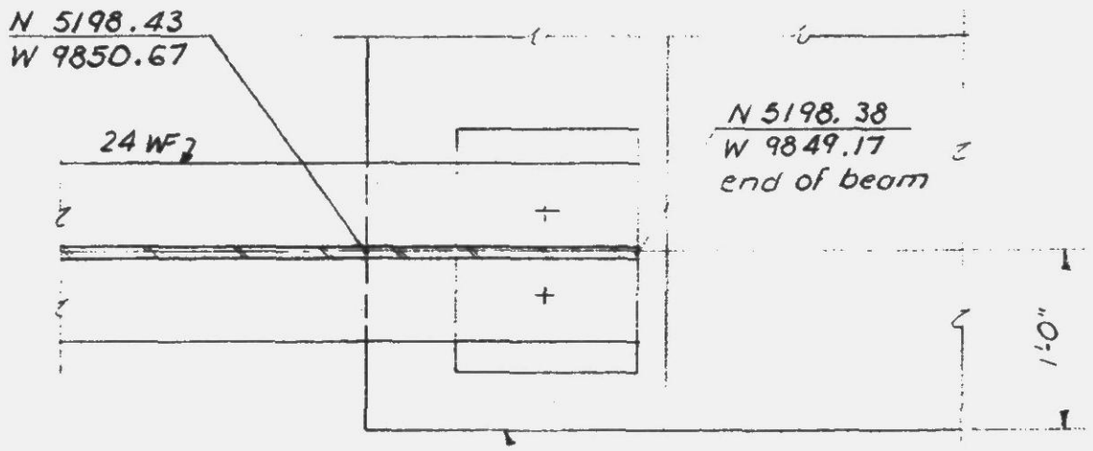

Section b-b

LICENSED PROFESSIONAL ENGINEER — LESLIE E. ROBERTSON — No. 34360 — UNIVERSITY OF THE STATE OF NEW YORK

DESIGNED

DRAWN: F. Smith

REVIEWED: E.L.

12-JK1-37

SKILLING, HELLE, CHRISTIANSEN, ROBERTSON — Structural & Civil Engineers

PROJECT: THE WORLD TRADE CENTER | TITLE: CONNECTION DETAILS | DATE: 6-13-69

REVISIONS

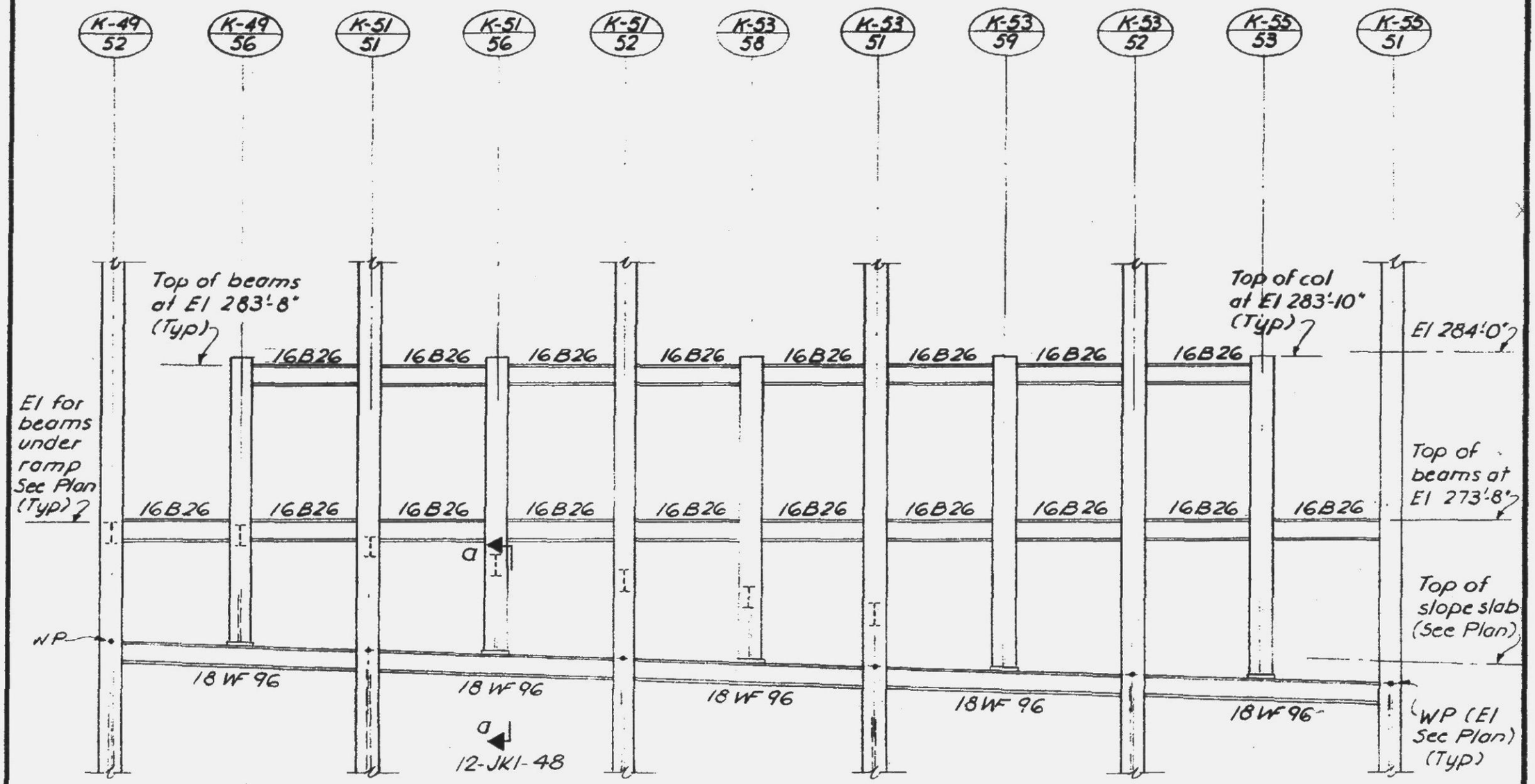

Elevation
(Looking East)

LICENSED PROFESSIONAL ENGINEER
LESLIE E. ROBERTSON
No. 34360
UNIVERSITY OF THE STATE OF NEW YORK

DESIGNED

DRAWN
F. Smith

REVIEWED
E.L.

12-JK1-47

SKILLING, HELLE, CHRISTIANSEN, ROBERTSON — Structural & Civil Engineers

PROJECT: THE WORLD TRADE CENTER | TITLE: CONNECTION DETAILS | DATE: 6-13-69

REVISIONS

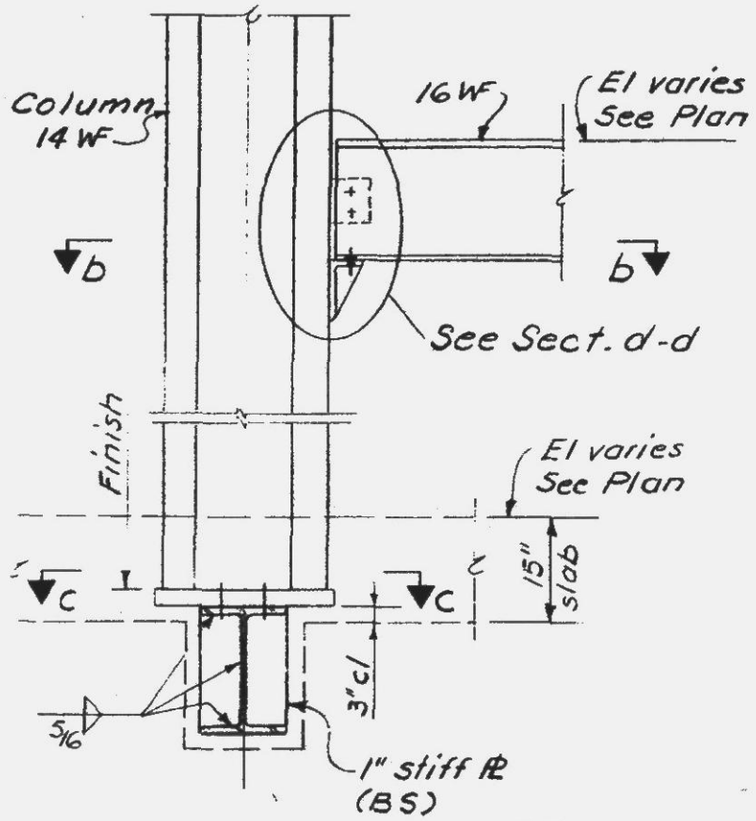

Section a-a
(see 12-JK1-47)

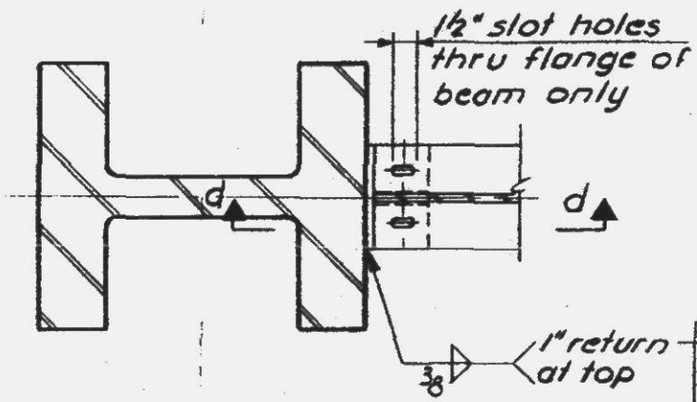

Section b-b

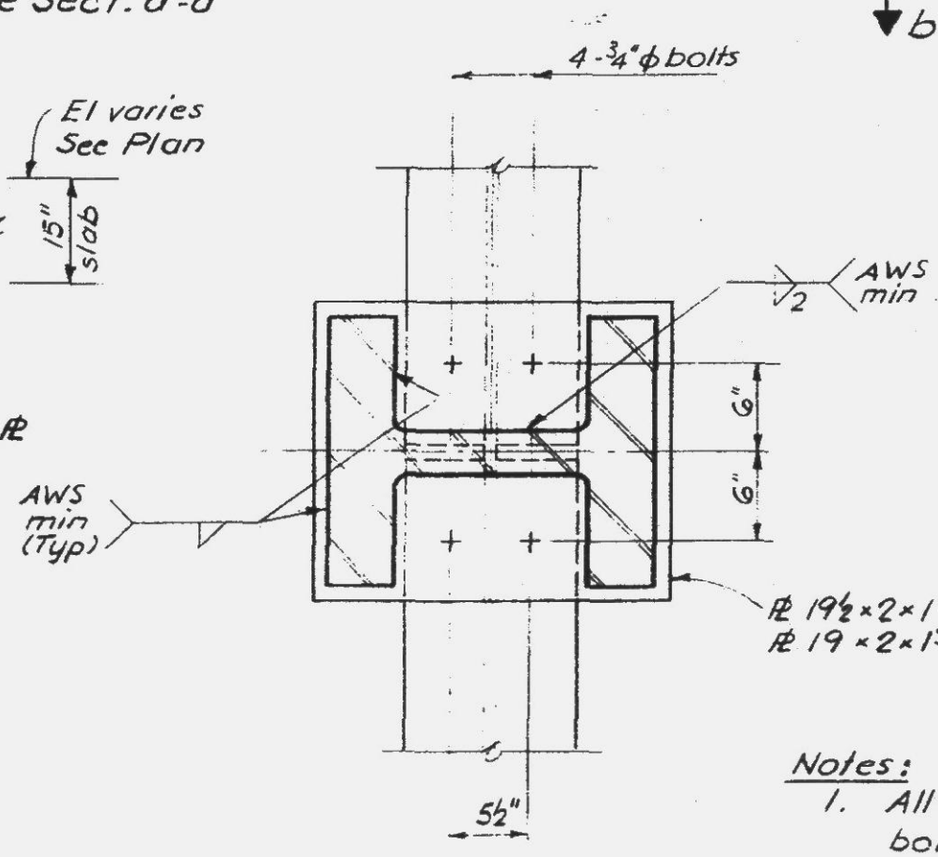

Section c-c

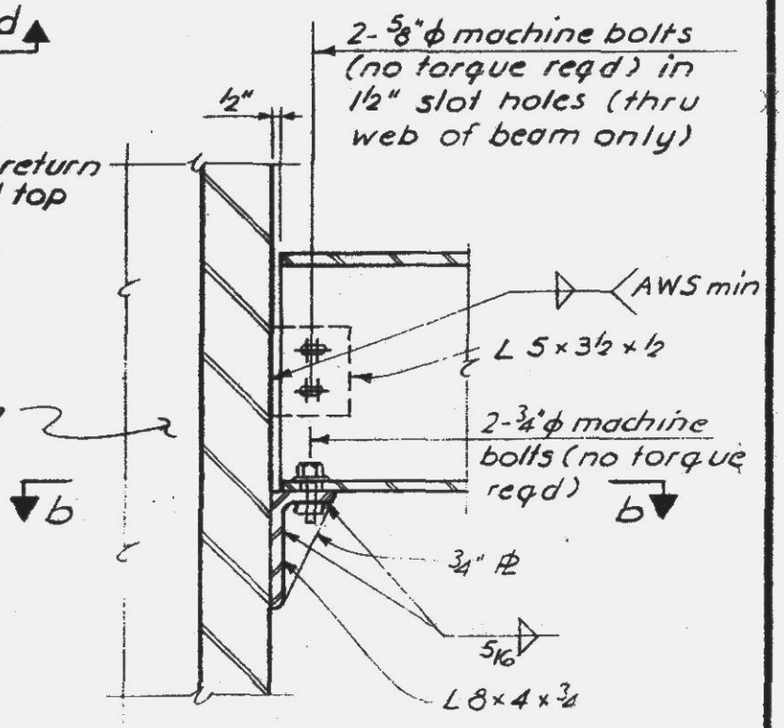

Section d-d

Notes:
1. All bolts shown to be A325 HS bolts (friction type) except as noted.

LICENSED PROFESSIONAL ENGINEER — LESLIE E. ROBERTSON — No. 34360 — UNIVERSITY OF THE STATE OF NEW YORK

DESIGNED

DRAWN: F. Smith

REVIEWED: E.L.

12-JK1-48

SKILLING, HELLE, CHRISTIANSEN, ROBERTSON — Structural & Civil Engineers

PROJECT: THE WORLD TRADE CENTER | TITLE: BEAM CONNECTION DETAILS | DATE: 12-3-68

REVISIONS

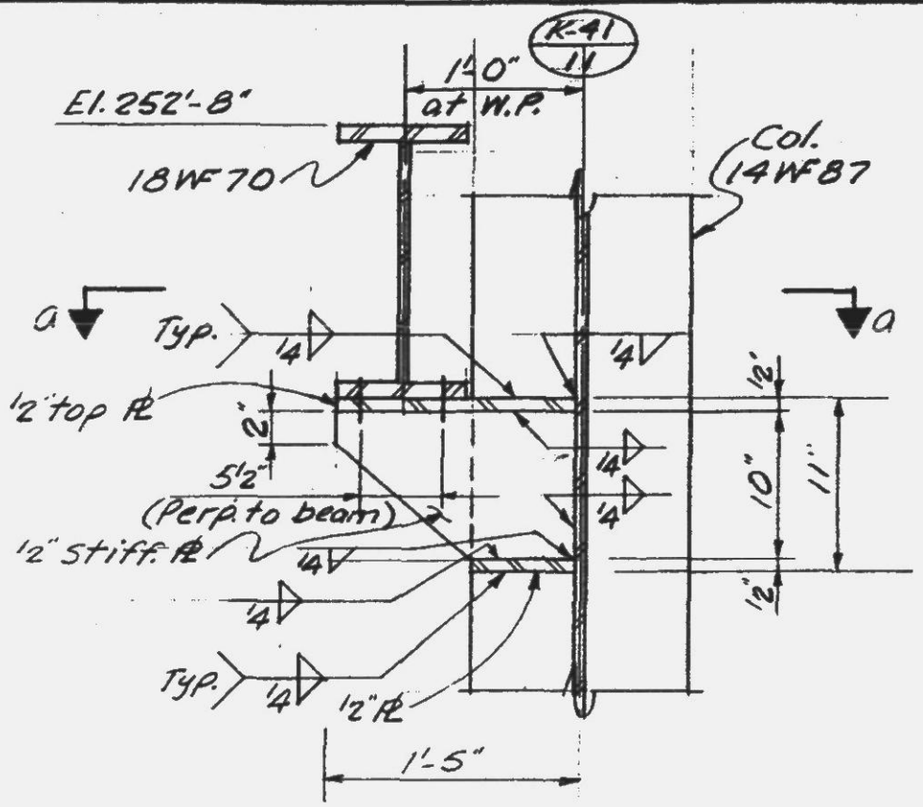

ELEVATION

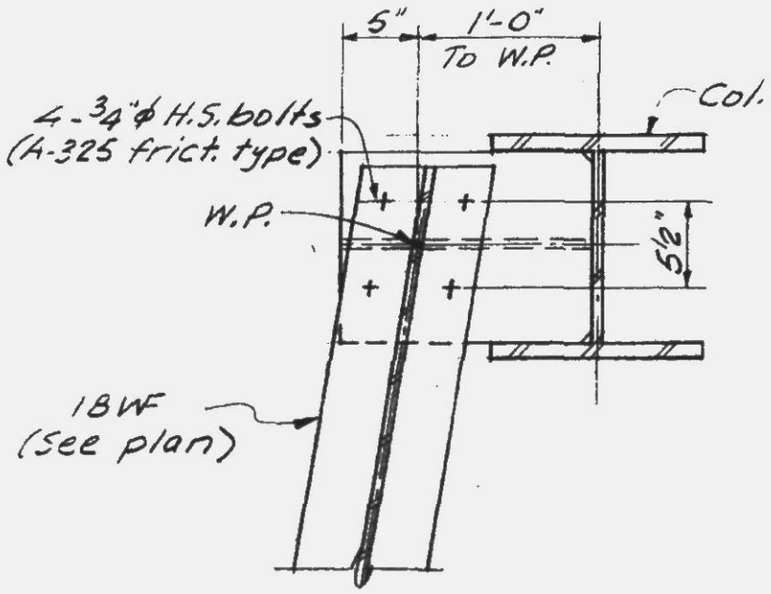

Section a-a

LICENSED PROFESSIONAL ENGINEER
LESLIE E. ROBERTSON
No. 34360
UNIVERSITY OF THE STATE OF NEW YORK

DESIGNED

DRAWN

REVIEWED

12-JK1-49

SKILLING - HELLE - CHRISTIANSEN - ROBERTSON — Structural & Civil Engineers

PROJECT THE WORLD TRADE CENTER | TITLE BEAM CONNECTION DETAILS | DATE 10-20-67

REVISIONS
1-5-68

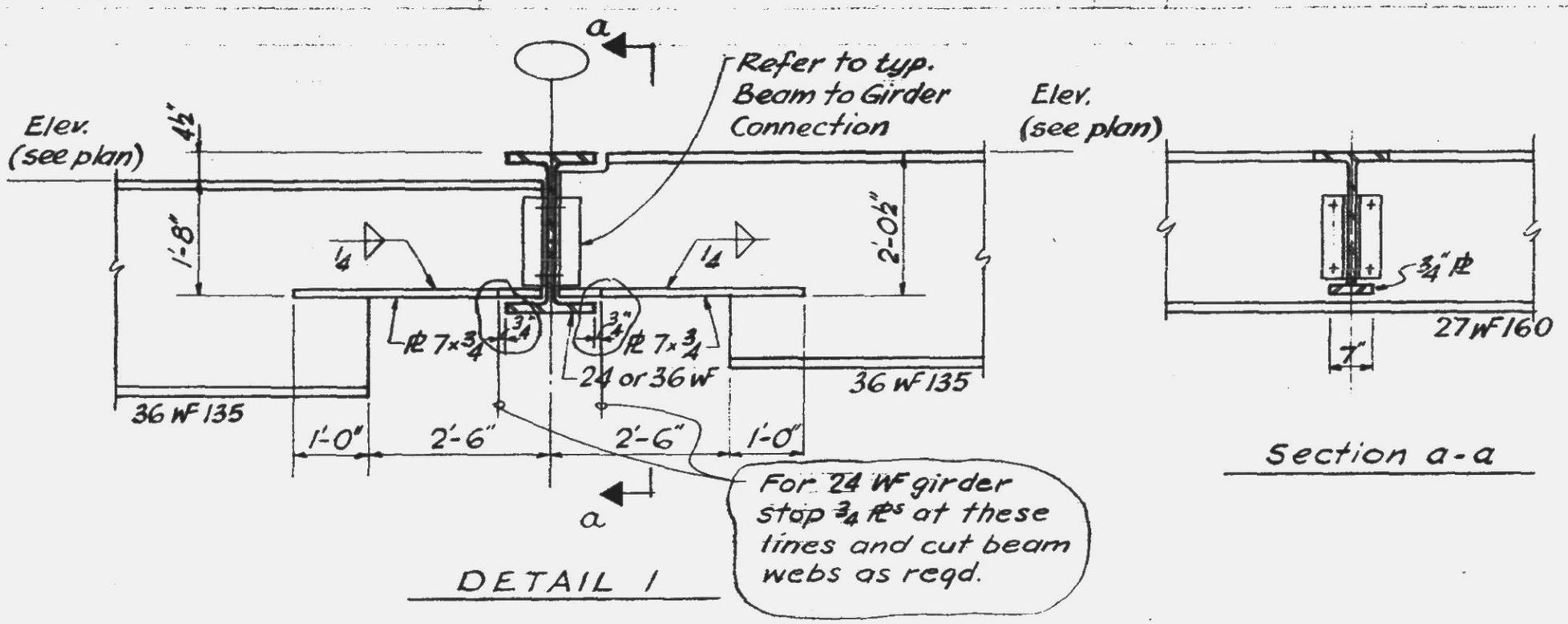

DETAIL 1

Section a-a

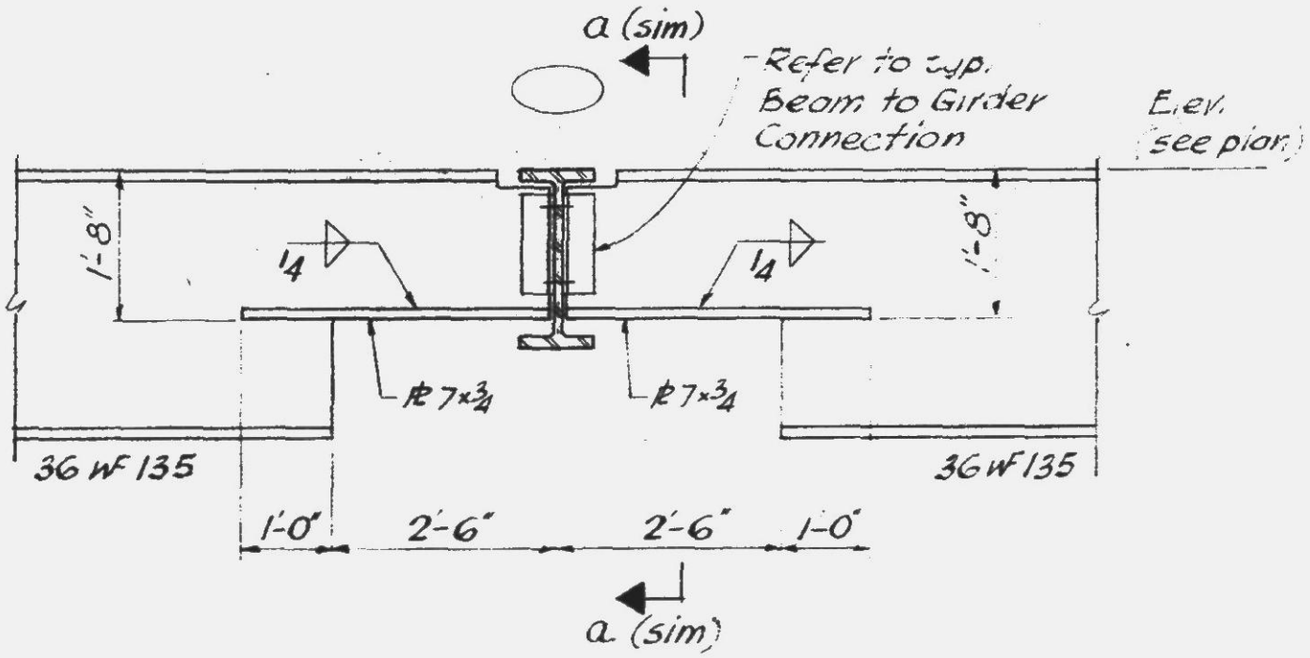

DETAIL 2

LICENSED PROFESSIONAL ENGINEER
LESLIE E. ROBERTSON
No. 34960
UNIVERSITY OF THE STATE OF NEW YORK

12-JK1-50

SKILLING - HELLE - CHRISTIANSEN - ROBERTSON — Structural & Civil Engineers

PROJECT THE WORLD TRADE CENTER | TITLE BEAM CONNECTION DETAILS | DATE 10-20-67

REVISIONS

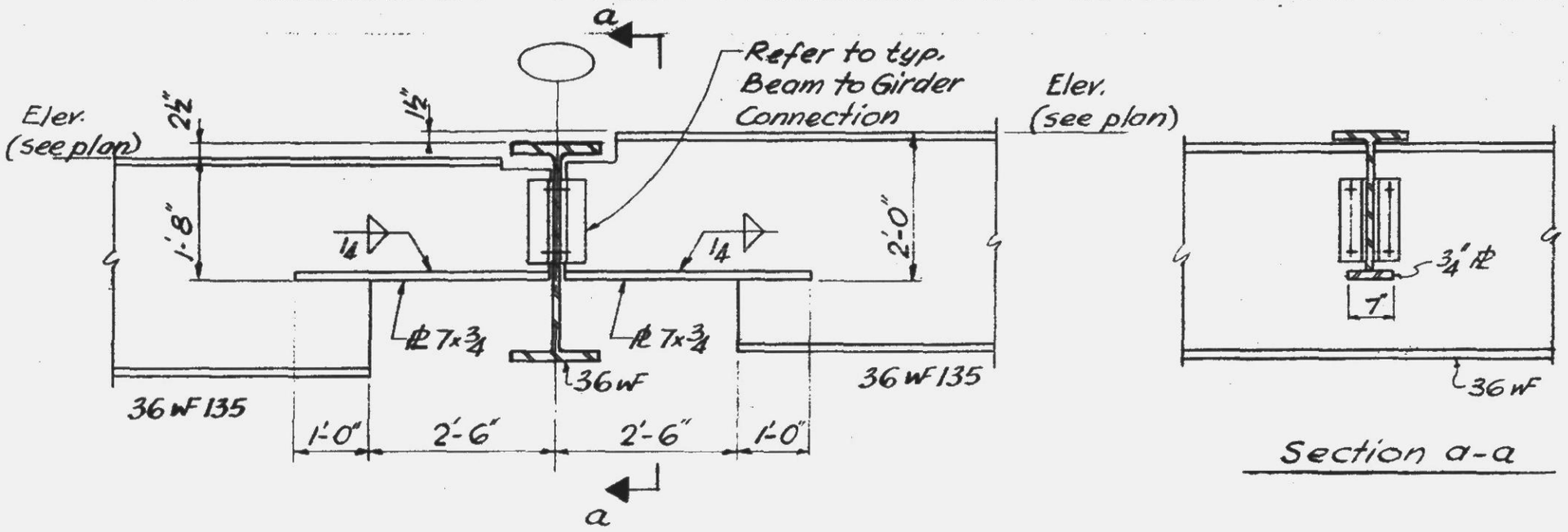

DETAIL 3

Section a-a

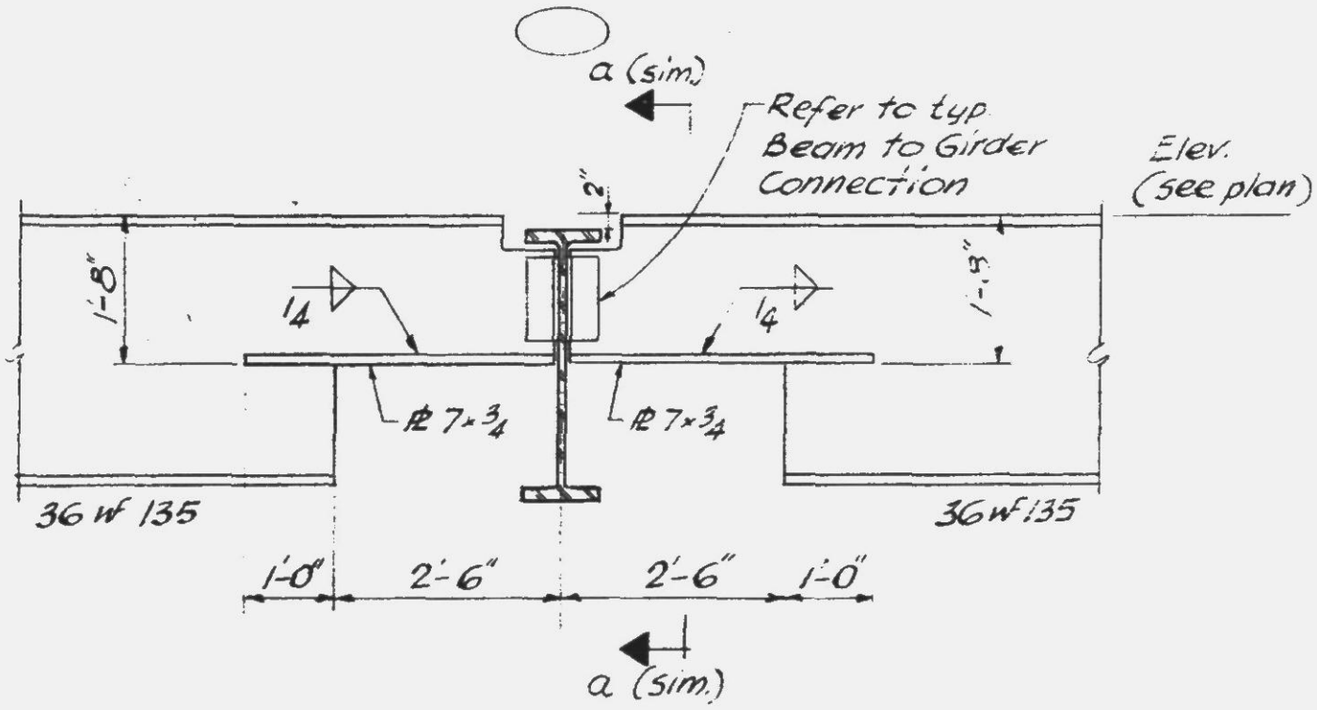

DETAIL 4

LICENSED PROFESSIONAL ENGINEER LESLIE E. ROBERTSON No. 34360 UNIVERSITY OF THE STATE OF NEW YORK

12-JK-51

SKILLING - HELLE - CHRISTIANSEN - ROBERTSON

PROJECT: THE WORLD TRADE CENTER | BEAM CONNECTION DETAIL | DATE: 10-20-67

REVISIONS

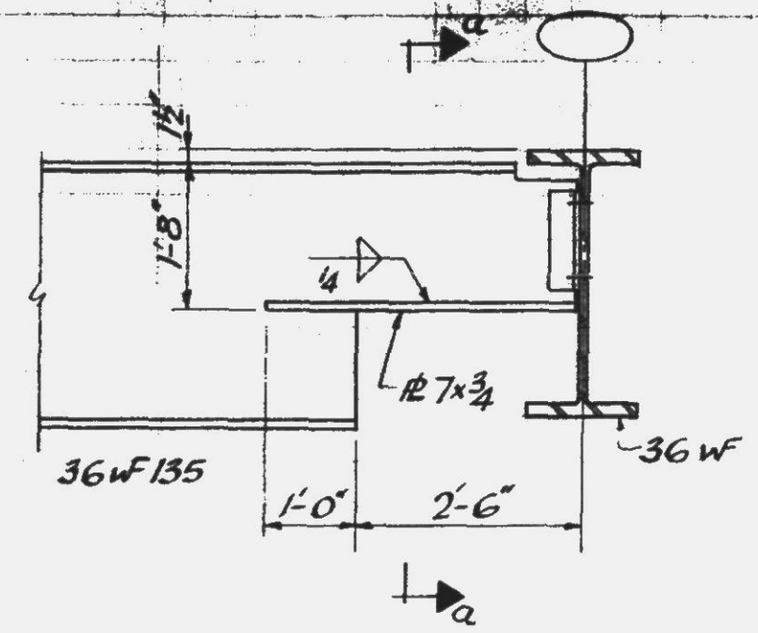

DETAIL 5

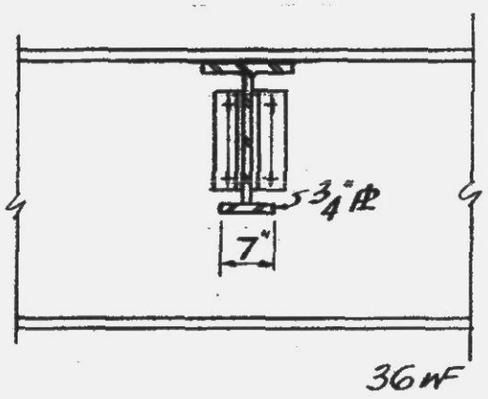

Section a-a

LICENSED PROFESSIONAL ENGINEER
LESLIE E. ROBERTSON
No. 34360
UNIVERSITY OF THE STATE OF NEW YORK

12-JK1-52

SKILLING [illegible] ROBERTSON

PROJECT: THE WORLD TRADE CENTER | TITLE: BEAM TO COL. CONN. FOR COLS. [illegible] | DATE: [illegible]

REVISIONS

6-7-68

TYPE OF CONNECTIONS

COLUMN No.	FLOOR AT EL. 257'				BELOW FLOOR EL. 284'			
	N	S	E	W	N	S	E	W
K31-3							II	
K31-4	III	III	I-A					
K31-5	III	III	I	I-A	III	III	II	II
K31-6	III	III	I	I	III	III	II	II
K31-7	III	III	I	I	III	III	II	II
K31-8	III	III	I	I	III	III	II	II
K31-9	III	III	I	I	III	III	II	II
K31-10	III	III	I	I			II	II
K31-11	I	I	III	III				
K31-12	I	I	III	III				
K29-4		I						

TYPE OF CONNECTIONS

COLUMN No.	FLOOR AT EL. 257'				BELOW FLOOR EL. 284'			
	N	S	E	W	N	S	E	W
K35-2							II	
K35-3	III	III	I-A					
K35-4	III	III	I	I-A	III	III	II	II
K35-5	III	III	I	I	III	III	II	II
K35-6	III	III	I	I	III	III	II	II
K35-7	III	III	I	I	III	III	II	II
K35-8	III	III	I	I	III	III	II	II
K35-9	III	III	I	I	III	III	II	II
K35-10	III	III	I	I		III		II
K35-11	I	I	III	III				
K35-12	I	I	III	III				
K70-4				III				
K70-5				III				
K70-6				III				

NOTES:

1. Provide the connections called out in the schedule to all columns shown. Some or a portion of these connections may have to be removed after the determination of exact beam sizes and locations within this area — (subject to the final machine layout in refrigeration room)
2. Refer to the following drawings for detail of connections:-
   - Type I & I-A —— 12-JK1-54
   - Type II —— 12-JK1-55
   - Type III —— 12-JK1-56

LICENSED PROFESSIONAL ENGINEER
LESLIE E. ROBERTSON
No. 34360
UNIVERSITY OF THE STATE OF NEW YORK

12-JK1-53

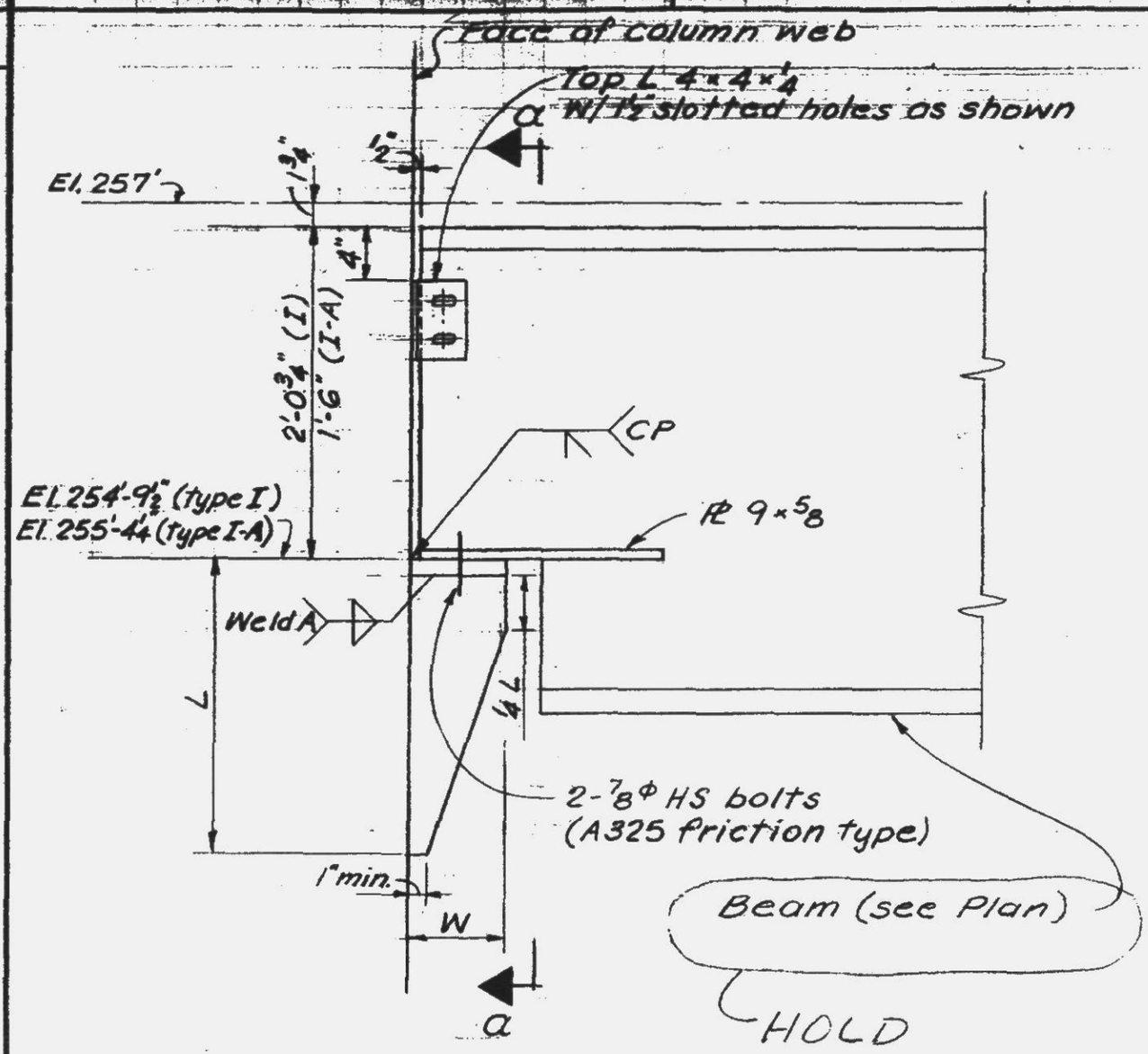

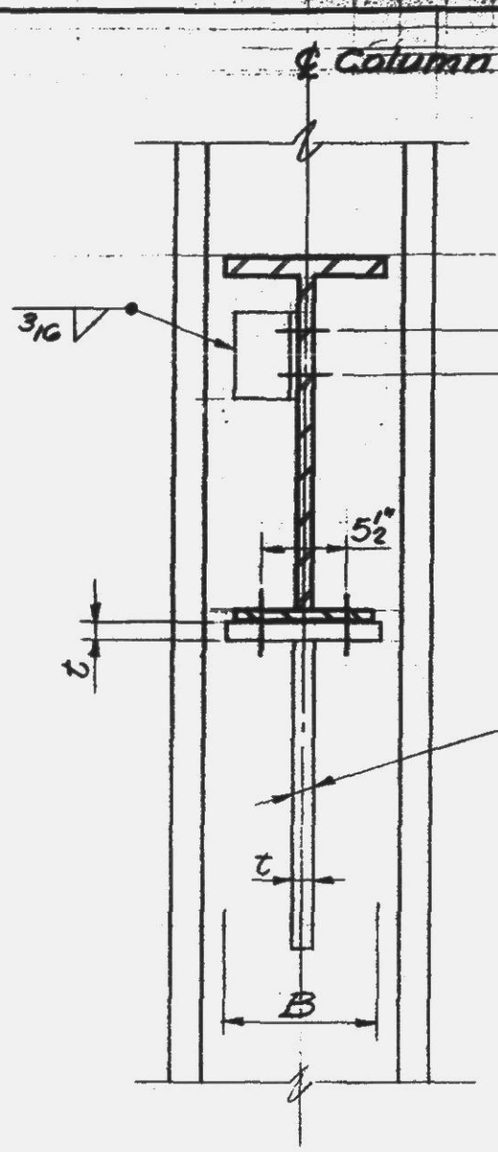

Section a-a

	TYPE I	TYPE I-A
L	1'-10"	1'-3"
W	7"	4"
B	10"	8½"
t	1⅜"	½"
WELD A	7/16"	⅜"
WELD B	7/16" *	⅜"

* Use ½" weld for column @ web thickness greater than 2¼".
All welds to be E70 xx.

TYPE I & TYPE I-A

Provide this type of connection to columns within refrigeration room area.
(See schedule on 12-JKI-53 for locations)

LICENSED PROFESSIONAL ENGINEER · LESLIE E. ROBERTSON · No. 34360 · UNIVERSITY OF THE STATE OF NEW YORK

REVISIONS
11-27-68

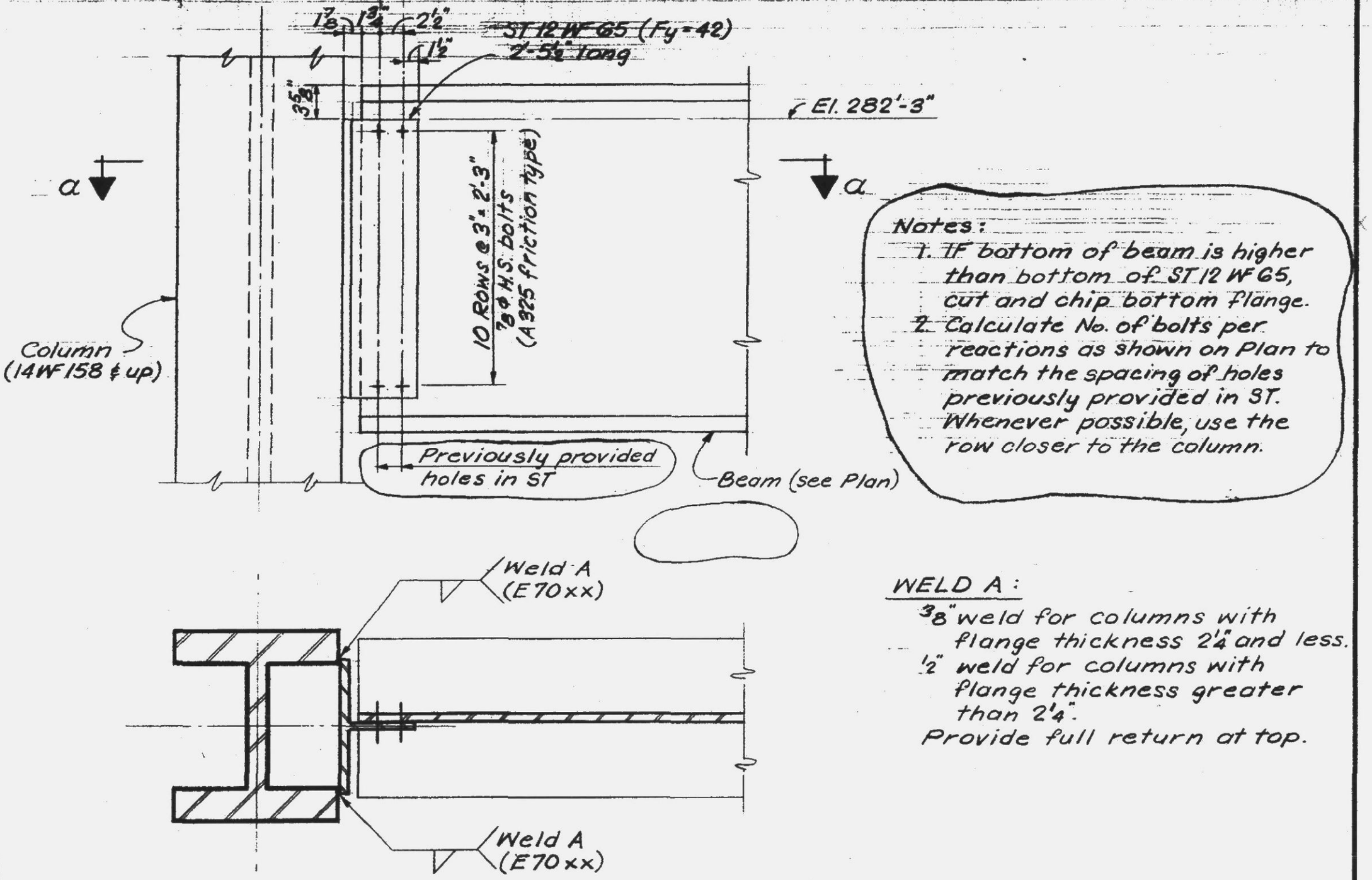

Notes:
1. If bottom of beam is higher than bottom of ST 12 WF 65, cut and chip bottom flange.
2. Calculate No. of bolts per reactions as shown on Plan to match the spacing of holes previously provided in ST. Whenever possible, use the row closer to the column.

WELD A:
⅜" weld for columns with flange thickness 2¼" and less.
½" weld for columns with flange thickness greater than 2¼".
Provide full return at top.

Section a-a

TYPE II

Provide this type of connection to columns within refrigeration room area.
(See schedule on 12-JK1-53 for location)

LICENSED PROFESSIONAL ENGINEER
LESLIE E. ROBERTSON
No. 34360
UNIVERSITY OF THE STATE OF NEW YORK

SKILLING · HELLE · CHRISTIANSEN · ROBERTSON — Structural Engineers

PROJECT THE WORLD TRADE CENTER | TITLE TYP. COL. CONN. FOR COL'S WITHIN REFRIG. RM. AREA | DATE 11-24-67

REVISIONS
11-27-68

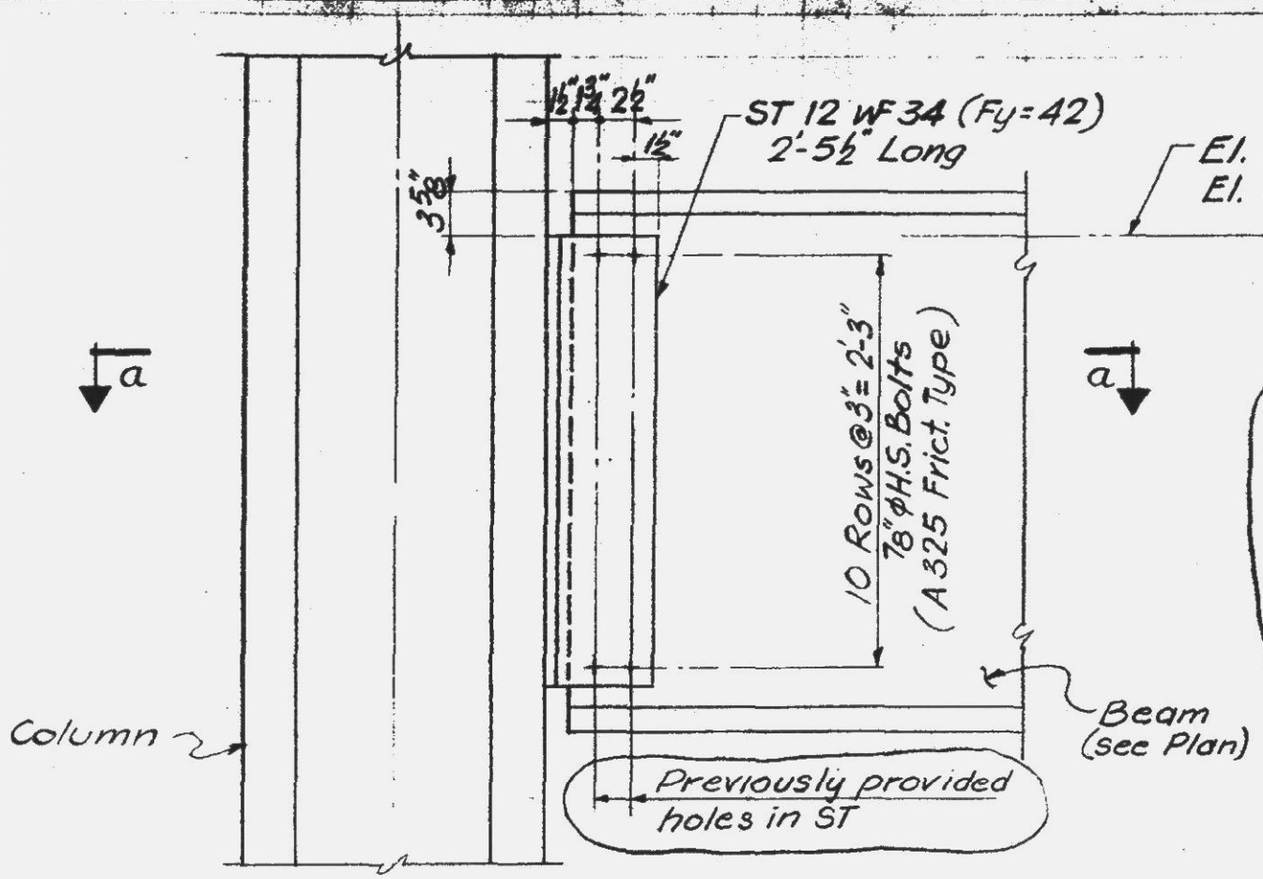

Notes:
1. IF bottom of beam is higher than bottom of ST 12 WF 34, cut and chip bottom flange.
2. Calculate No. of bolts per reactions as shown on Plan to match the spacing of holes previously provided in ST. Whenever possible, use the row closer to the column.

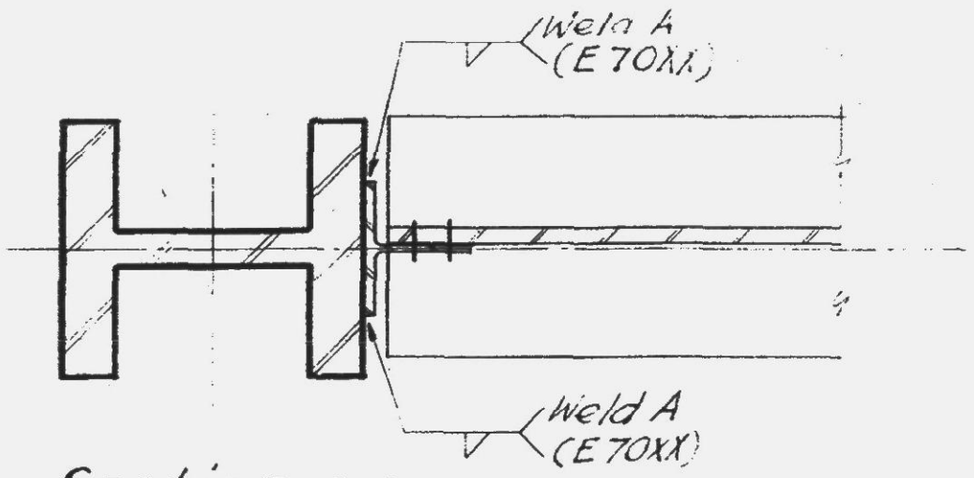

Section a-a

Provide this type of connection to columns within Refrigeration room area
(See Schedule on 12-JKI-53 for location)

TYPE III

WELD A:

3/8" weld for Col. with flange thickness 2 1/4" and less
1/2" weld for Col. with flange thickness greater than 2 1/4"
Provide 1" return at top.

LICENSED PROFESSIONAL ENGINEER
LESLIE E. ROBERTSON
No. 34360
UNIVERSITY OF THE STATE OF NEW YORK

12-JKI-56

SKILLING, HELLE, CHRISTIANSEN, ROBERTSON — Structural & Civil Engineers

PROJECT: THE WORLD TRADE CENTER | TITLE: BEAM TO COL. CONN. FOR COL'S WITHIN REFRIG. RM. AREA | DATE: 10-15-68

REVISIONS

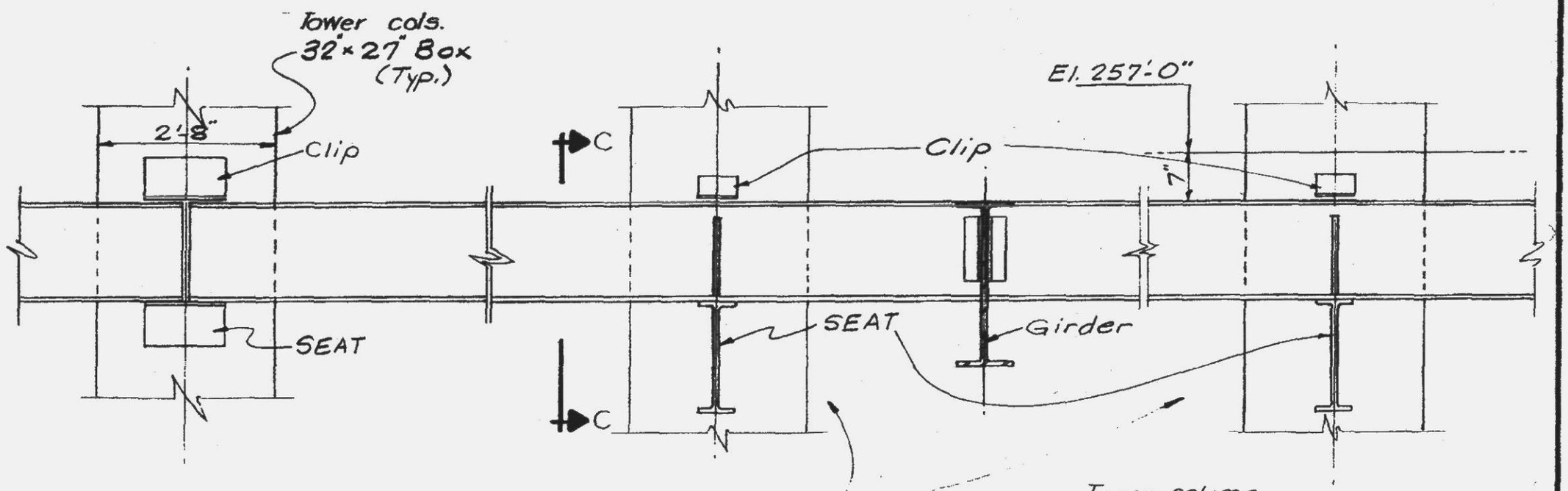

DETAIL 'B'

Use at cols. not adjacent to a girder.

DETAIL 'A'

Typ. at cols. adjacent to Girder.

Tower column ref. line

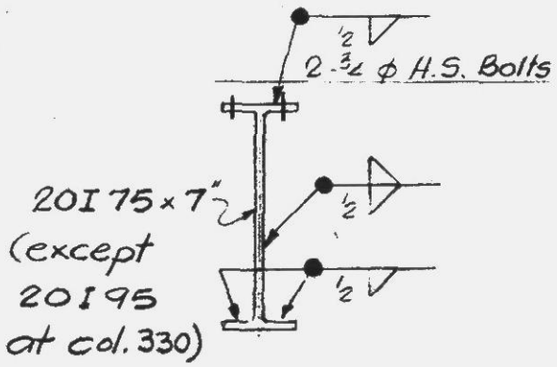

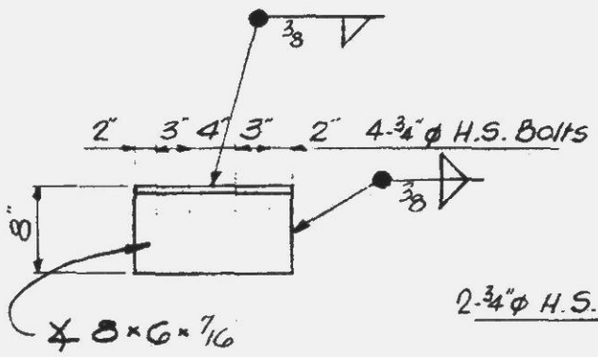

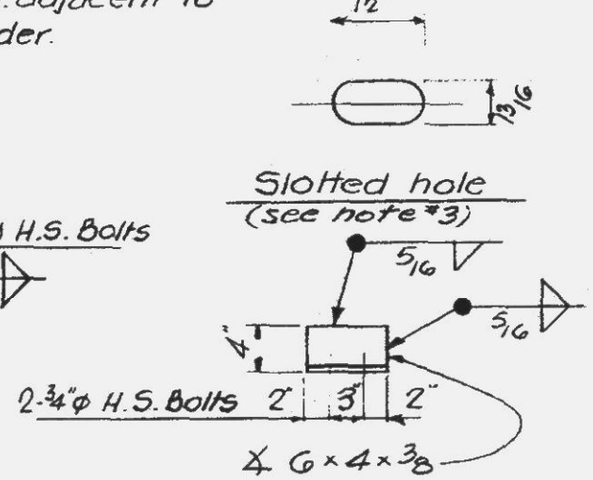

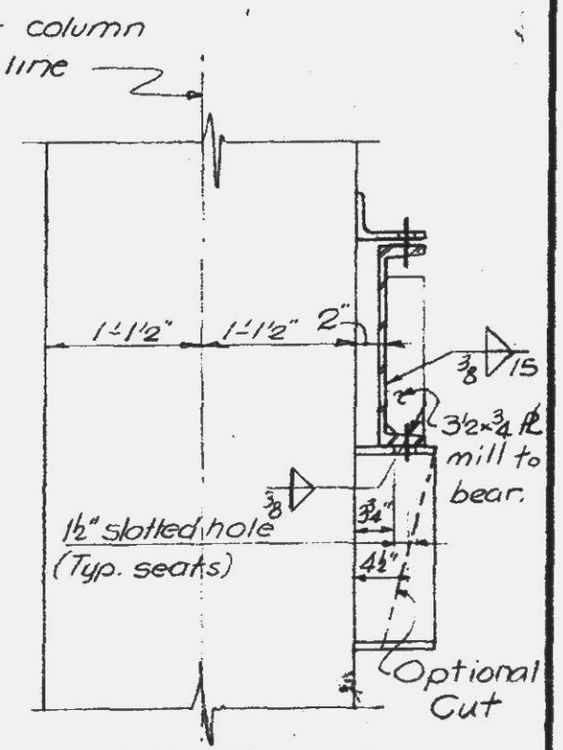

SEAT FOR DETAIL 'A'

SEAT FOR DETAIL 'B'
(Reverse = clip for Detail 'B')

CLIP FOR DETAIL 'A'

SECTION C-C

Notes:

1. All H.S. Bolts to be A-325 friction type, ¾" dia.
2. All welding to be E70xx
3. Holes in ext. flg. of L's to be slotted longitudinally; in seats & clips transversely.

LICENSED PROFESSIONAL ENGINEER — LESLIE E. ROBERTSON — No. 34360 — UNIVERSITY OF THE STATE OF NEW YORK

DESIGNED

DRAWN

REVIEWED

12-JK1-56A

SKILLING - HELLE - CHRISTIANSEN - ROBERTSON Structural & Civil Engineers

PROJECT THE WORLD TRADE CENTER | TITLE CONNECTION DETAIL AT COLUMN K31-9 & K31-10 | DATE 11-24-67

REVISIONS

1-10-68

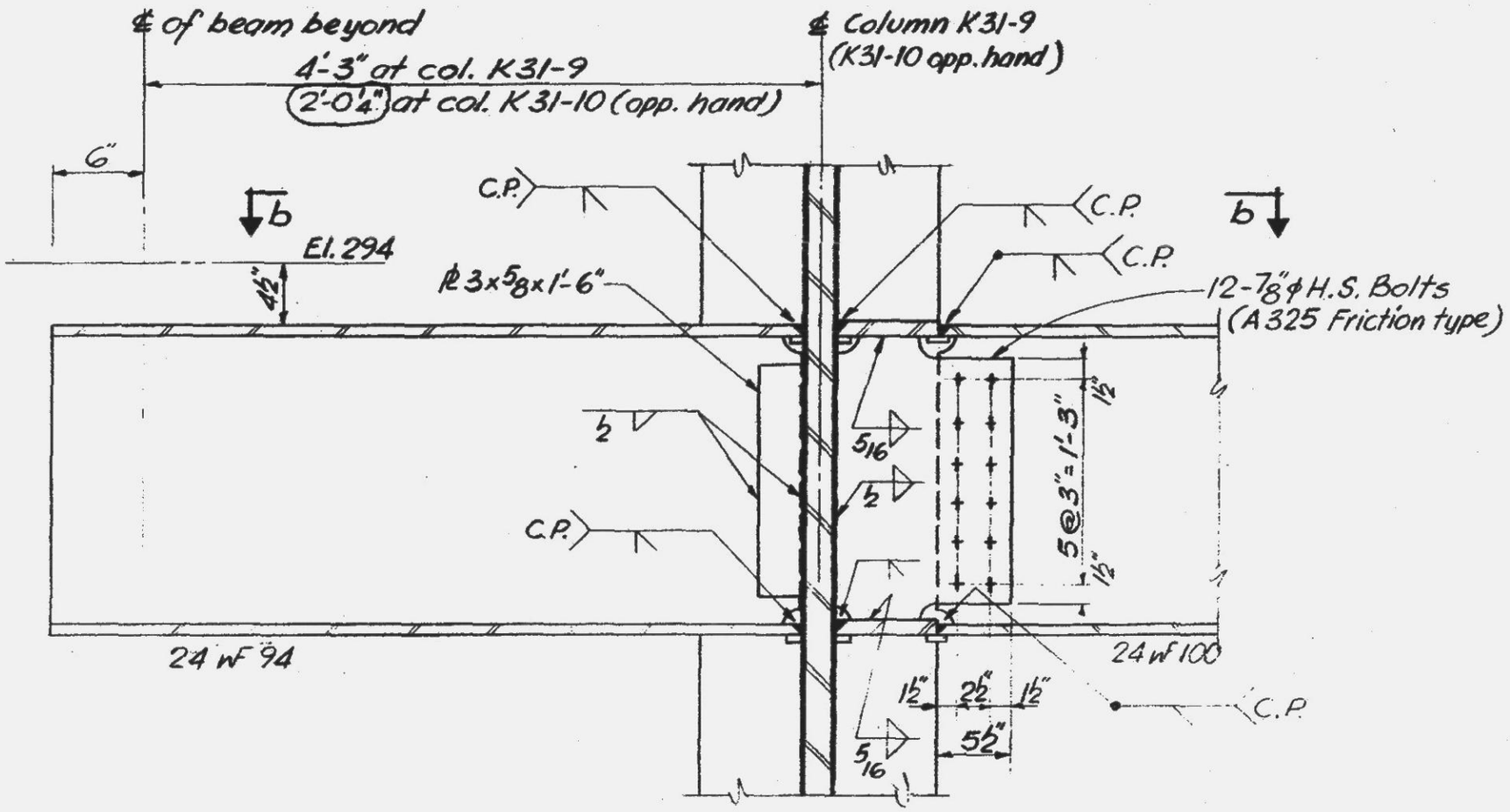

Section a-a

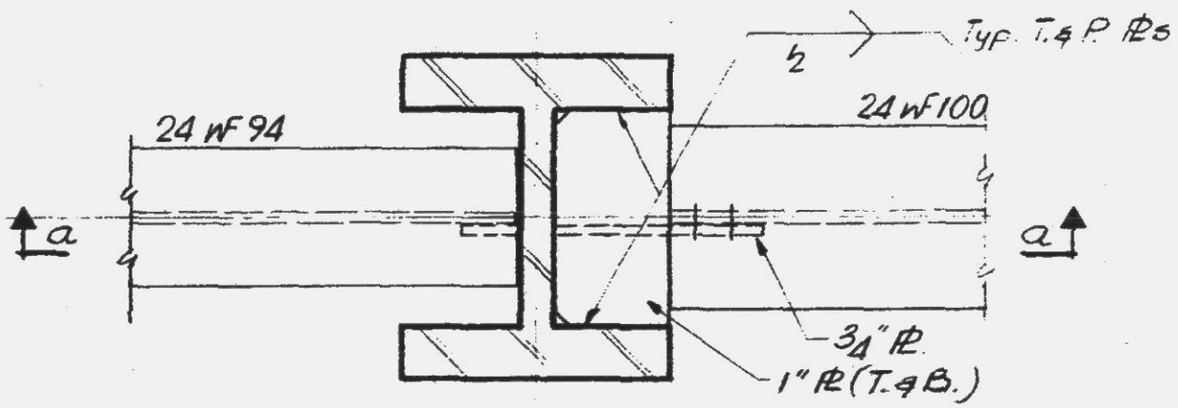

Section b-b

LICENSED PROFESSIONAL ENGINEER
LESLIE E. ROBERTSON
NO. 34360
UNIVERSITY OF THE STATE OF NEW YORK

12-JK1-57

SKILLING - HELLE - CHRISTIANSEN - ROBERTSON — Structural & Civil Engineers

PROJECT: THE WORLD TRADE CENTER | TITLE: CONNECTION DETAIL AT COLUMN 315-5 | DATE: 11-24-67

REVISIONS

2-16-68

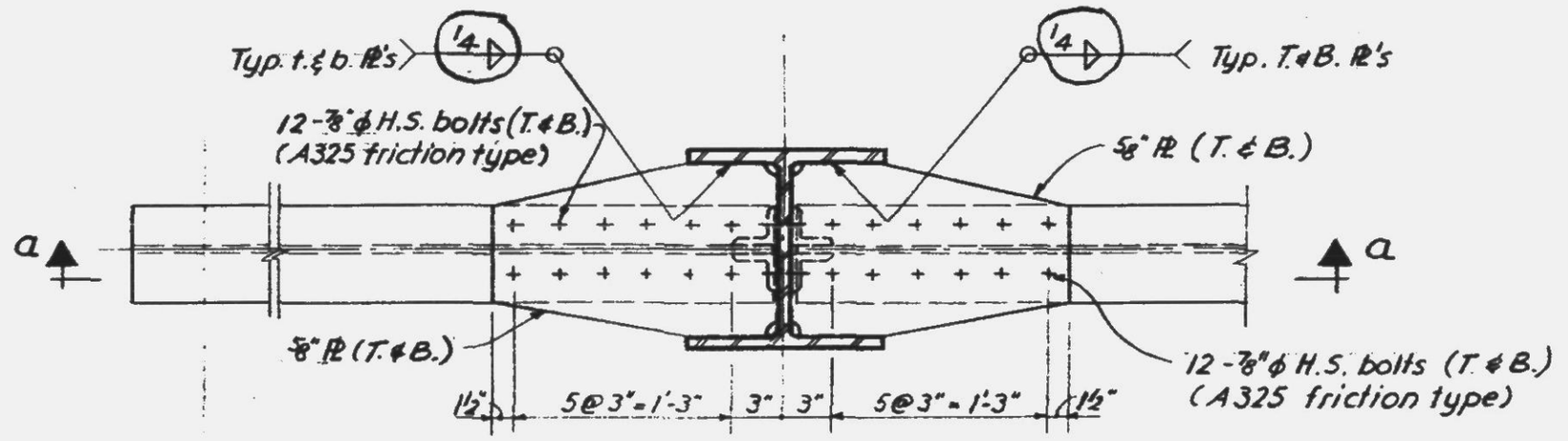

PLAN

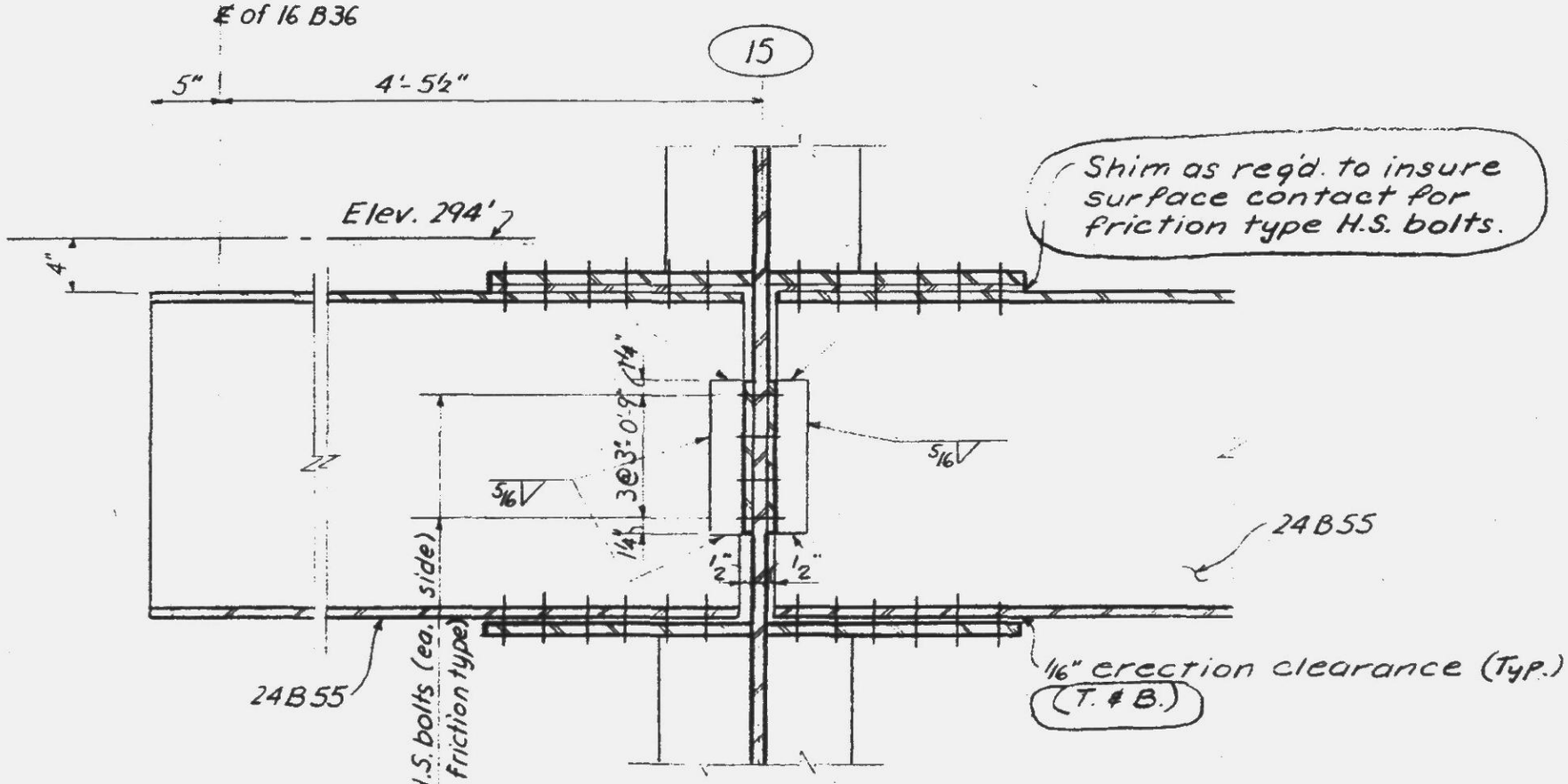

Section a-a

LICENSED PROFESSIONAL ENGINEER
LESLIE E. ROBERTSON
No. 34360
UNIVERSITY OF THE STATE OF NEW YORK

12-JK1-58

SKILLING, HELLE, CHRISTIANSEN, ROBERTSON

PROJECT: THE WORLD TRADE CENTER | TITLE: BEAM CONNECTION DETAILS

REVISIONS

2-9-68
4-5-68
9-4-68
12-3-68
4-18-69

DETAIL No.	ELEV. AT TOP OF BEAM		BEAM SIZES		SEAT		
	Upper beam	Lower beam	Upper beam	Lower beam	Size	Stiff. PL K	Weld b
A-1	309'-6"	307'-4"	18B40	36WF300	8WF35		
A-2	308'-5½"	307'-1"	14WF30	24WF76	Fill PL only		
A-3	309'-4"	305'-1"	24WF76	36WF150	27WF84	3/8"	1/4"
A-4	309'-4"	305'-1"	36WF194	36WF194	14WF119	1/2"	1/4"
A-5	309'-4"	306'-4"	18B40	36WF194	18B40		
A-6	309'-4"	305'-1"	21B44	36WF194	30WF99		
A-7	309'-6"	305'-3"	21WF49	33WF130	30WF99		
A-8	309'-2"	305'-10"	18B35	36WF245	21WF73		
A-9	309'-3"	307'-0"	18WF55	27WF94	8WF58		
B-1	309'-6¼"	306'-1"	18B35	30WF99	24B55		
B-2	309'-3"	305'-5"	24B55	36WF260	21WF55		
B-3	309'-3"	305'-8"	24B55	36WF170	18WF55		

NOTE:
See 12-JK1-62 for detail.

LESLIE E. ROBERTSON
LICENSED PROFESSIONAL ENGINEER
No. 34290
UNIVERSITY OF THE STATE OF NEW YORK

DRAWN
S.C.

REVIEWED
E.L.

12-JK1-59

SKILLING, HELLE, CHRISTIANSEN, ROBERTSON

PROJECT [illegible] TITLE BEAM CONNECTION DETAILS DATE 1-5-68

REVISIONS

3-21-69

DETAIL No.	ELEV. AT TOP OF BEAM		BEAM SIZES		SEAT			
	Upper beam	Lower beam	Upper beam	Lower beam	Size	Stiff. Pl. K	Weld a	Weld b
C-1	309'-6¼"		18 B 35					
		306'-9"	18 B 40	33 WF 240	14 WF 38			
D-1	309'-6"	307'-4"	21 WF 55	24 WF 68	ST 13 WF 42	¼	⅜	¼
D-2	306'-10"	305'-1"	18 WF 45	16½ x 29¼ I	ST 9 WF 25		5/16	
E-1	309'-3"	307'-0"	27 WF 94	24 WF 68		½	5/16	5/16

NOTE:
See 12-JK1-63 & 64 for detail.

LICENSED PROFESSIONAL ENGINEER
LESLIE E. ROBERTSON
No. 34360
UNIVERSITY OF THE STATE OF NEW YORK

DRAWN
S.C.

REVIEWED
E.L.

12-JK1-60

PROJECT [illegible]

DATE 1-31-68

REVISIONS

7-19-68

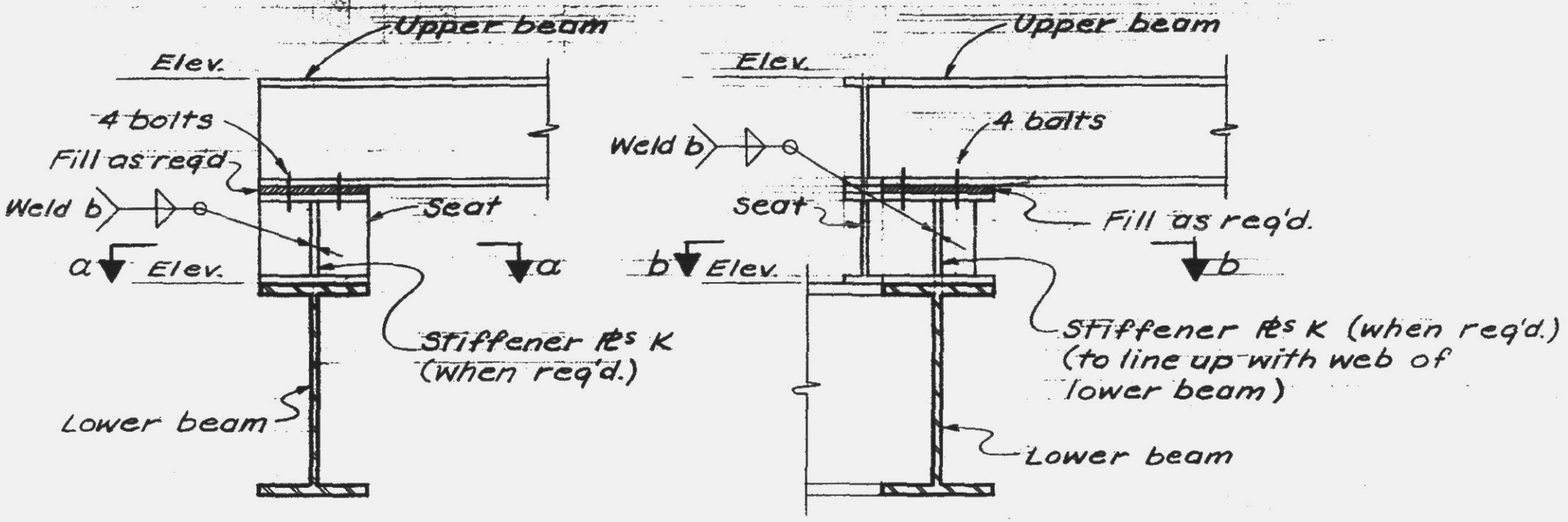

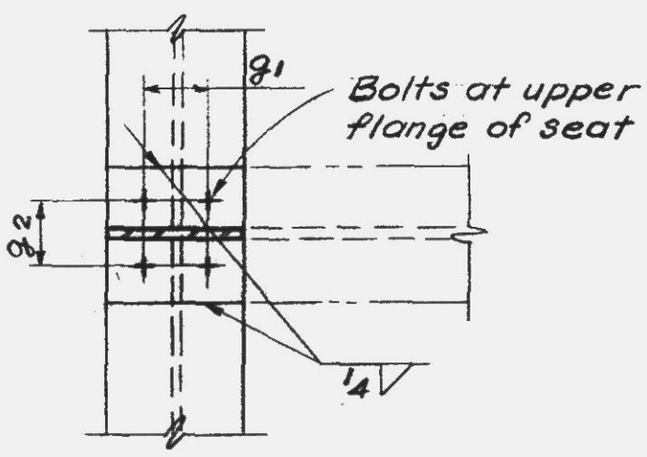

Section a-a

TYPE A SERIES

(see schedule on 12-JK1-59)

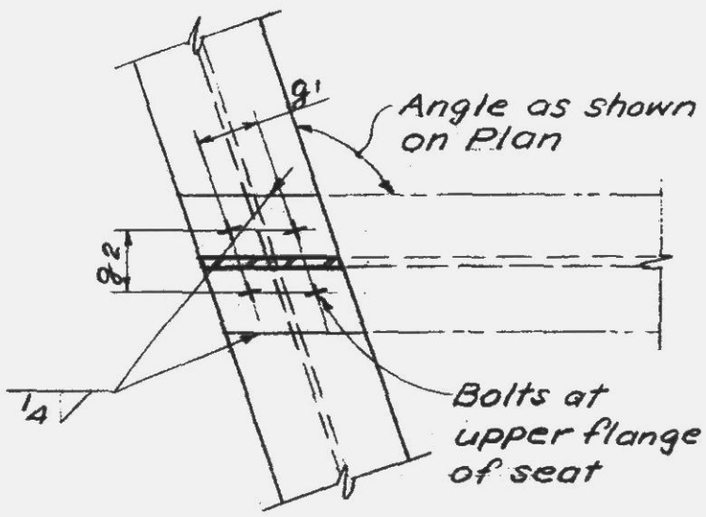

Section b-b

TYPE B SERIES

(see schedule on 12-JK1-59)

NOTES:

1. All seats to have Fy same as that of upper beam. (Stiff. Pls with Fy=42)
2. Length of all seats to be the same as flange width of lower beam.
3. g_1 to be g-value of lower beam.
   g_2 to be g-value of upper beam.
4. All bolts shown to be $\frac{7}{8}$" ϕ H.S. bolts A325 friction type.
5. Where seat is not called out on schedule, use fill Pls only.

LICENSED PROFESSIONAL ENGINEER
LESLIE E. ROBERTSON
No. 34360
UNIVERSITY OF THE STATE OF NEW YORK

12-JK1-62

SKILLING - HELLE - CHRISTIANSEN - ROBERTSON — Structural & Civil Engineers

PROJECT: THE WORLD TRADE CENTER — TITLE: BEAM CONNECTION DETAILS — DATE: 1-3-68

REVISIONS: 7-19-68

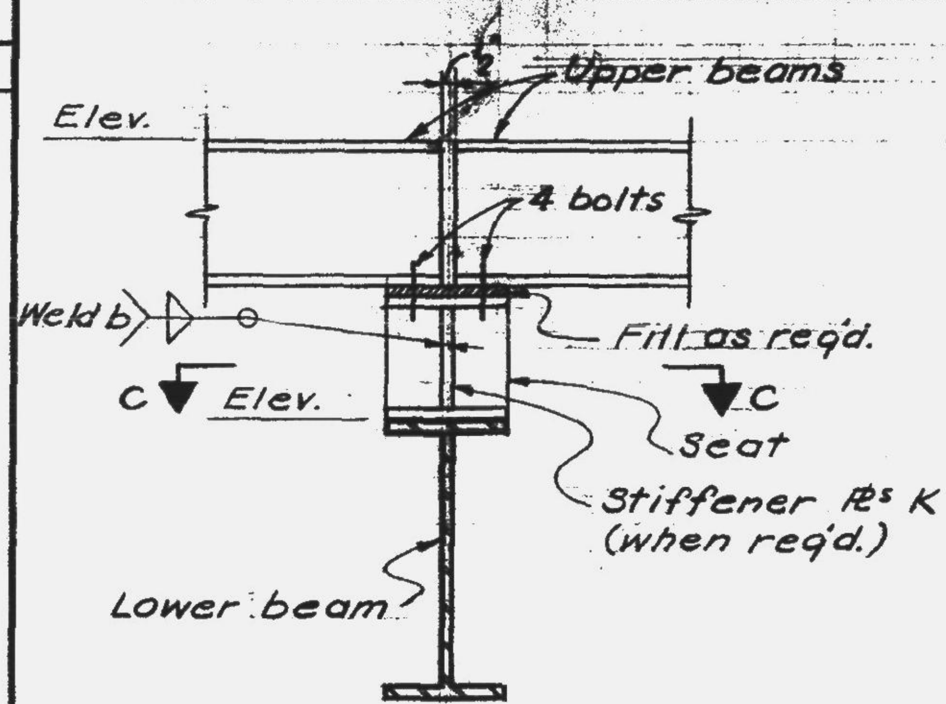

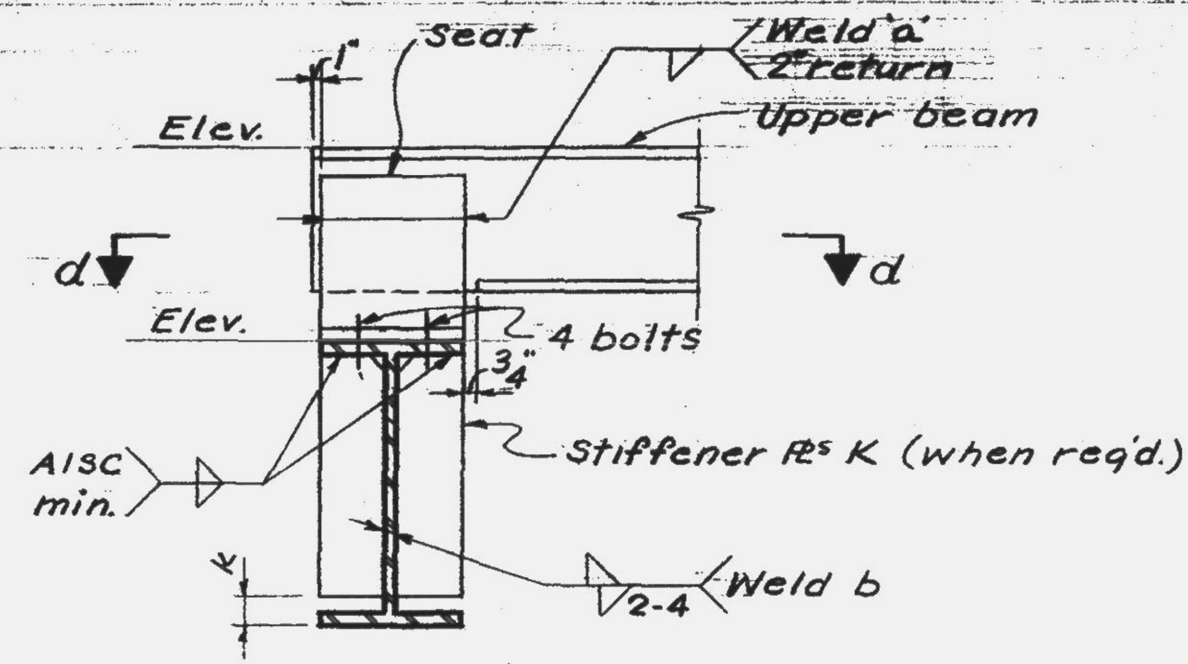

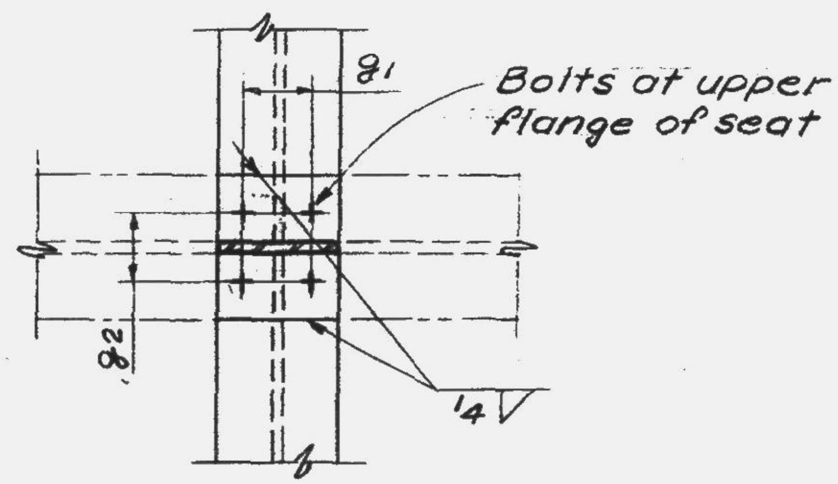

Section c-c

TYPE C SERIES

(see schedule on 12-JK1-60)

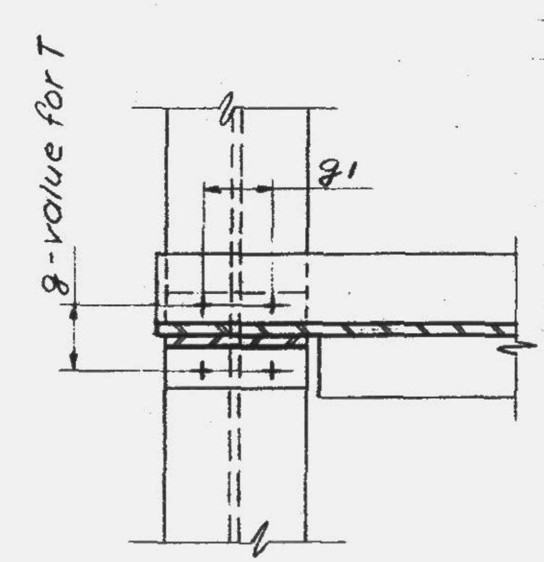

Section d-d

TYPE D SERIES

(see schedule on 12-JK1-60)

NOTES:

1. All seats to have Fy same as that of upper beam (Stiff. Pls with Fy=42)
2. Length of all seats to be the same as flange width of lower beam.
3. g_1 to be g-value of lower beam. g_2 to be g-value of upper beam.
4. All bolts shown to be 7/8"Φ H.S. bolts A325 friction type.
5. Where seat is not called out on schedule, use fill Pls only.

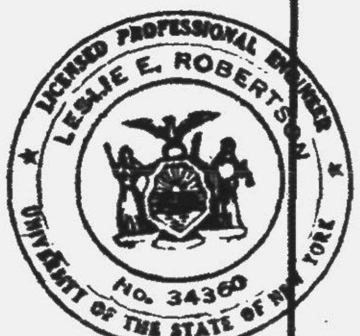

12-JK1-63

SKILLING, HELLE, CHRISTIANSEN, ROBERTSON — Structural & Civil Engineers

PROJECT: THE WORLD TRADE CENTER | TITLE: BEAM CONNECTION DETAILS | DATE: 3-21-69

REVISIONS

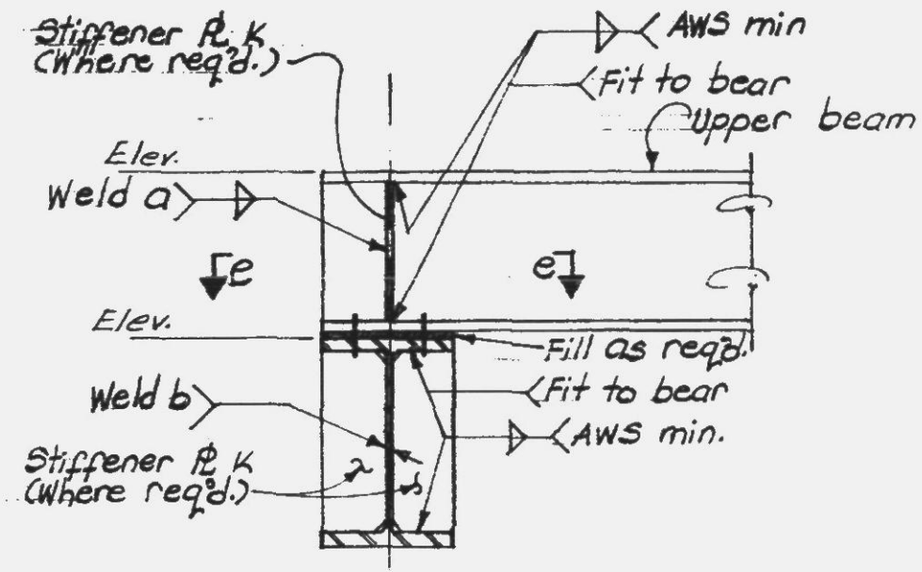

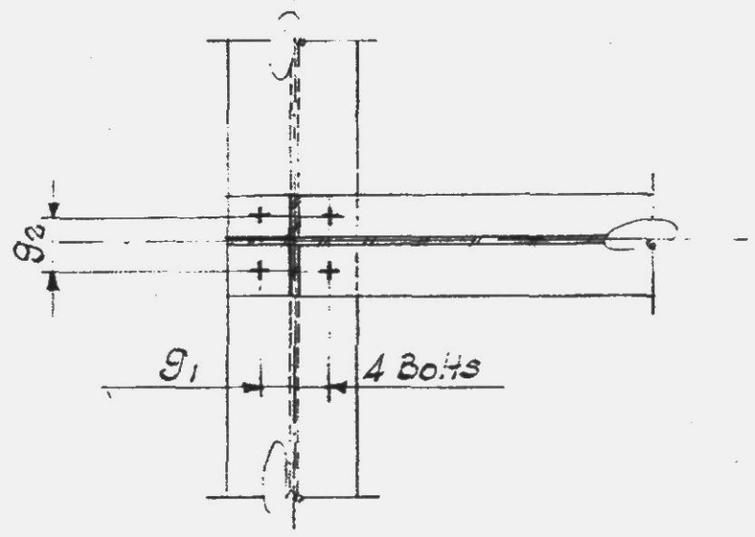

Section e-e
TYPE 'E' SERIES
(See schedule on 12JK1-60)

Notes:

1. All seats to have Fy same as that of upper beam. (Stiffener PL with Fy=42)
2. Length of all seats to be the same as flange width of lower beam.
3. 'g1' to be 'g' value of lower beam. 'g2' to be 'g' value of upper beam.
4. All bolts shown to be 7/8" ϕ H.S. bolts A325 friction type.
5. Where seat is not called out on schedule, use fill PLs only.

LICENSED PROFESSIONAL ENGINEER — LESLIE E. ROBERTSON — No. 34960 — UNIVERSITY OF THE STATE OF NEW YORK

DESIGNED

DRAWN: S.T.M.

REVIEWED: E.L.

12-JK1-64

SKILLING - HELLE - CHRISTIANSEN - ROBERTSON Structural & Civil Engineers

PROJECT THE WORLD TRADE CENTER TITLE BEAM CONNECTION DETAILS DATE 1-5-68

REVISIONS

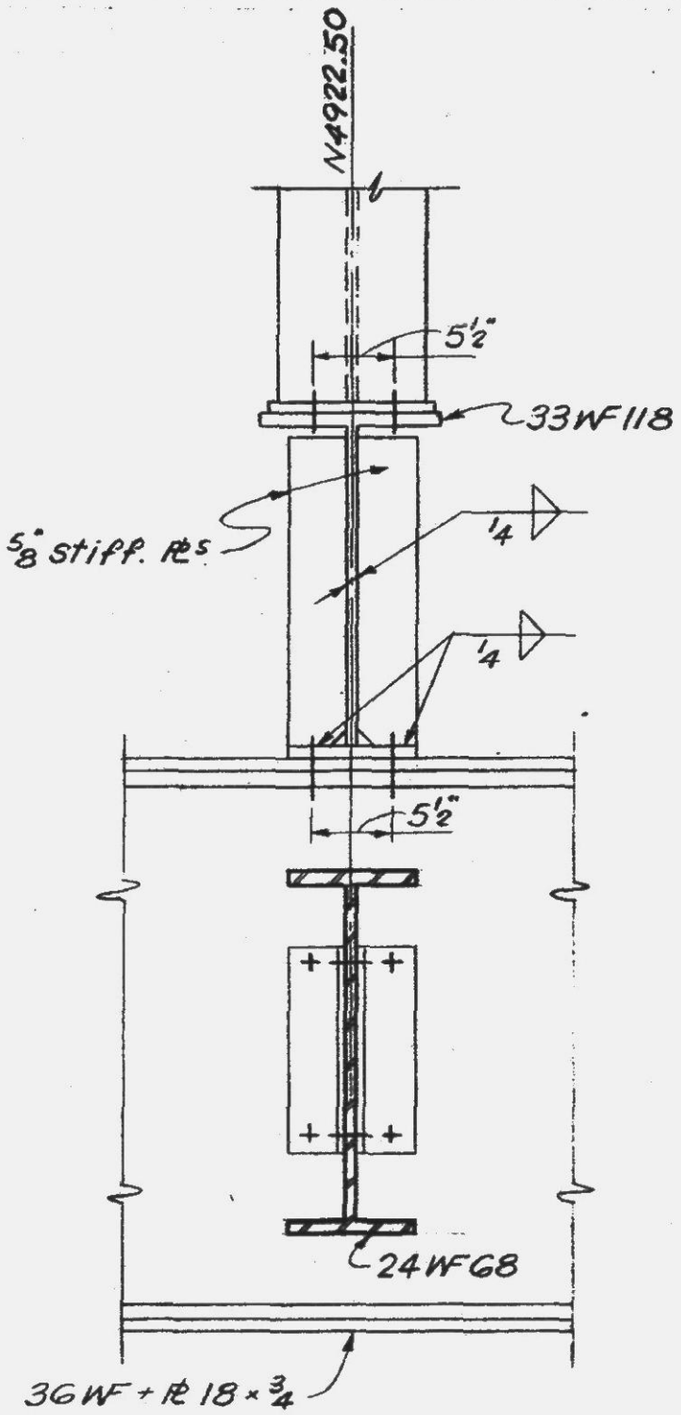

Section a-a

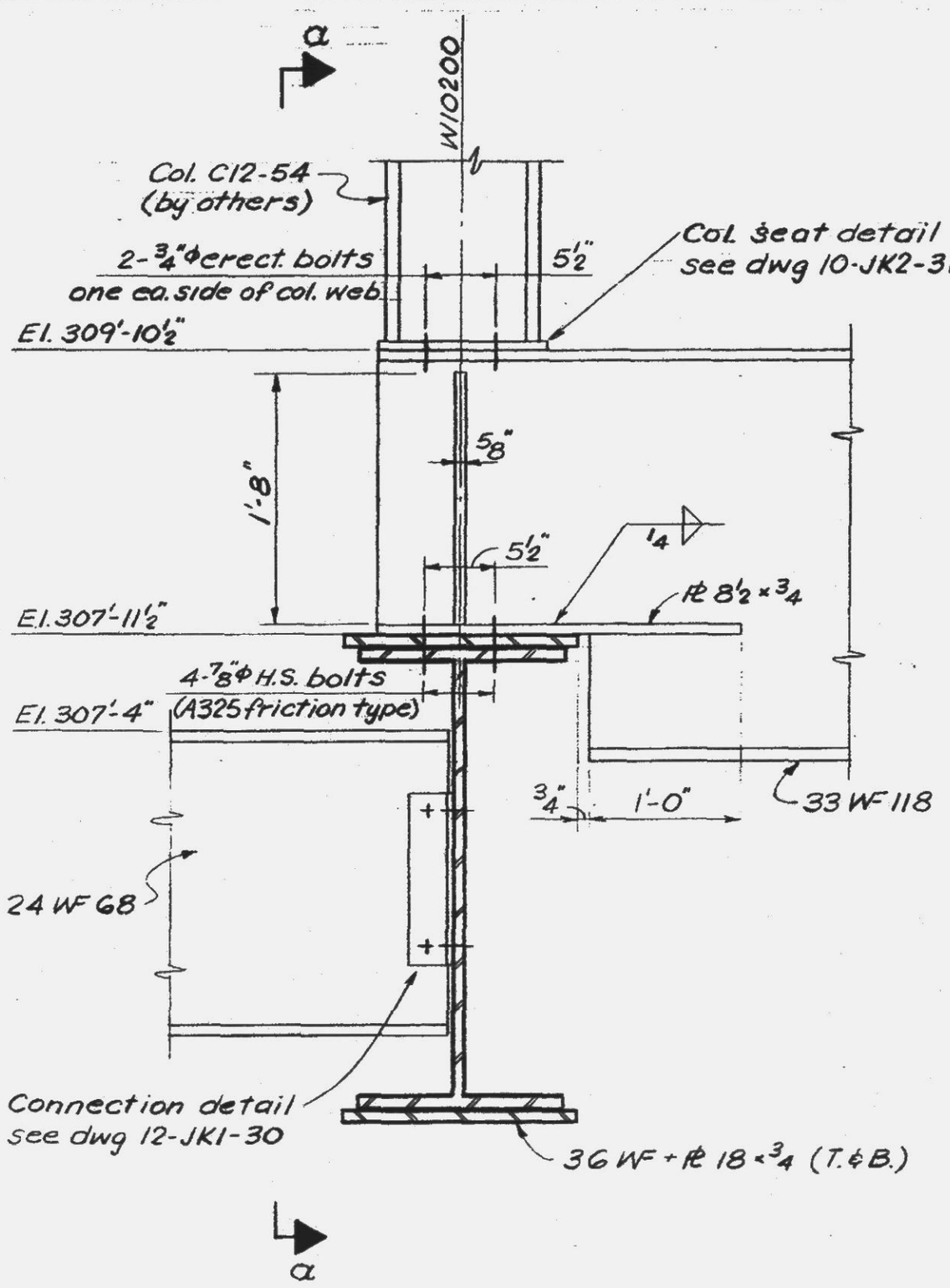

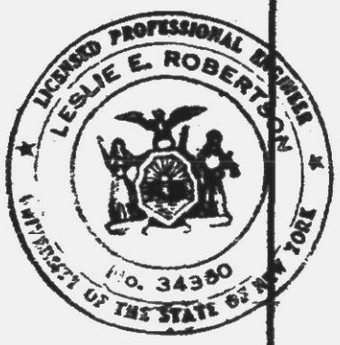

12-JK1-65

SKILLING - HELLE - CHRISTIANSEN - ROBERTSON — Structural & Civil Engineers

PROJECT THE WORLD TRADE CENTER | TITLE GIANT CONNECTION DETAILS | DATE 1-5-68

REVISIONS

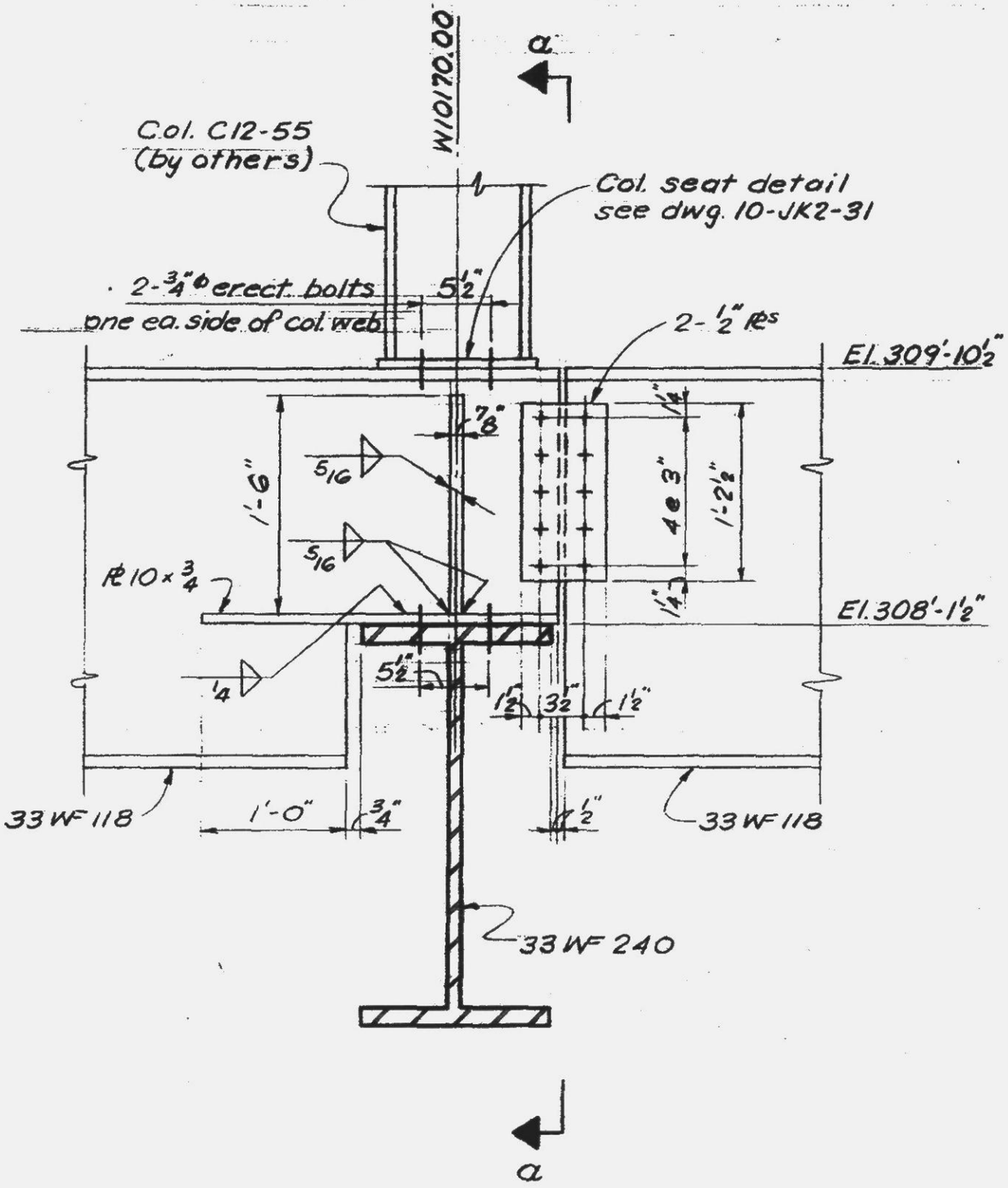

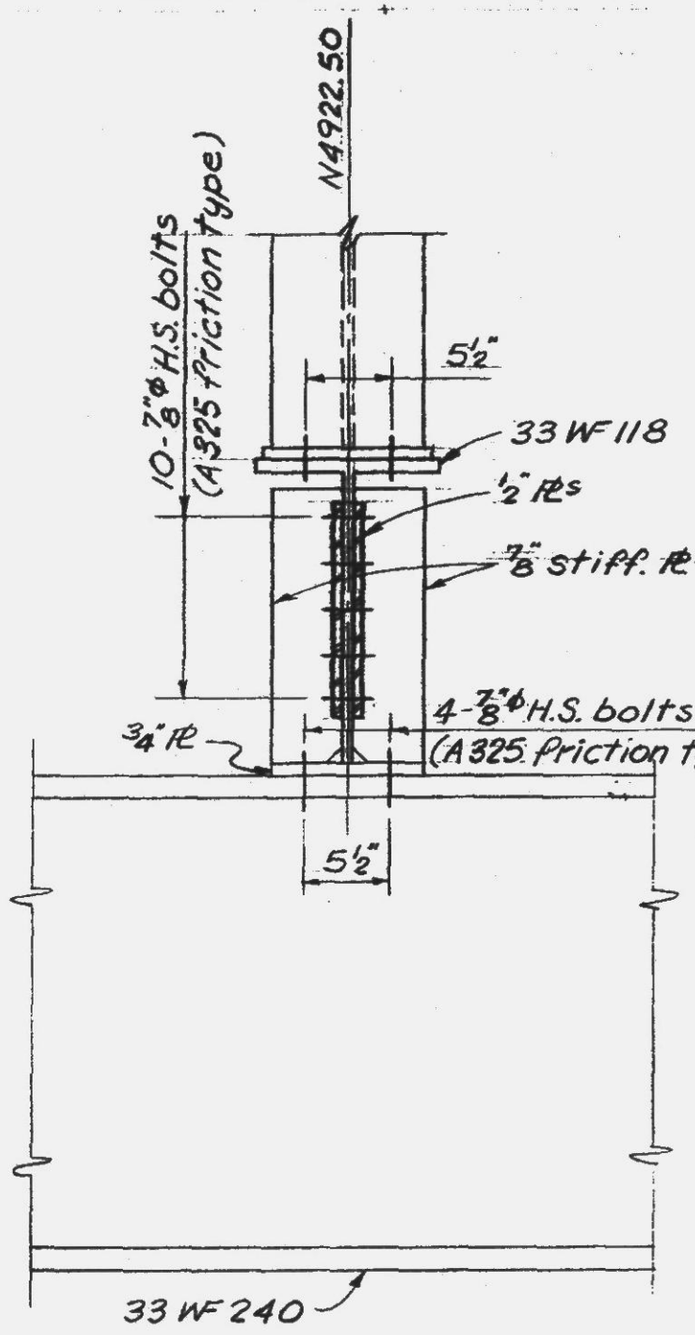

Section a-a

LICENSED PROFESSIONAL ENGINEER
LESLIE E. ROBERTSON
STATE OF NEW YORK

12-JK1-66

SKILLING - HELLE - CHRISTIANSEN - ROBERTSON Structural & Civil Engineers

PROJECT THE WORLD TRADE CENTER | TITLE BEAM TO COL. CONN. - WHERE COL. SPLICE 3' ABOVE FLOOR | DATE 1-29-68

REVISIONS
3-19-68
11-11-68
4-18-69
5-29-69

SCHEDULE

DETAIL NO.	COLUMN SIZE	BEAM SIZE	CONNECTION TYPE	CONNECTION LENGTH	NO. OF BOLTS 1ST ROW	NO. OF BOLTS 2ND ROW	WELDA
11	14 WF 426	21 WF 55	A	1'-2½"	5	2	½
12	14 WF 398	21 WF 55	A	1'-2½"	5	2	½
13	14 WF 398	36 WF 135	A	1'-8½"	7	4	½
14	14 WF 150	21 WF 55	B	1'-2½"	5	2	5/16
15	14 WF 211	21 WF 55	B	1'-2½"	5	2	3/8
16	14 WF 426	36 WF 160	A	2'-2½"	9	5	½
17	14 WF 426	33 WF 130	A	2'-5½"	10	5	½
18	14 WF 398	33 WF 130	A	2'-5½"	10	5	½
19	14 WF 398	30 WF 108	A	1'-8½"	7	0	½
20	14 WF 398	24 B 55	A	0'-11½"	4	2	½
21	14 WF 176	24 B 55	B	0'-11½"	4	2	5/16
22	14 WF 184	24 B 55	B	0'-11½"	4	2	5/16
23	14 WF 167	30 WF 116	A	1'-5½"	6	2	5/16
24	14 WF 237	33 WF 141	B	0'-11½"	4	0	3/8
*25	14 WF 500	18 WF 50	A	1'-2½"	5	0	½
*26	14 WF 730	18 WF 45	A	0'-11½"	4	0	½
*27	14 WF 730	21 WF 55	A	1'-5½"	6	0	½
*28	14 WF 314	24 WF 68	A	1'-5½"	6	0	½
*29	14 WF 320 + PL	16 B 26	A	1'-2½"	5	3	½
*30	14 WF 320 + PL	14 B 22	A	0'-11½"	4	3	½
*31	14 WF 320 + PL	21 B 44	A	1'-5½"	6	4	½
*32	14 WF 605	27 WF 84	A	1'-8½"	7	2	½
*33	14 WF 320 + PL	33 WF 118	A	1'-8½"	7	5	½
*34	14 WF 550	24 WF 76	A	1'-5½"	6	2	½
*35	14 WF 550	36 WF 150	A	1'-8½"	7	7	½
*36	14 WF 287	36 WF 150	A	1'-8½"	7	7	3/8
*37	14 WF 320 + PL	33 WF 220	A	1'-11½"	**8	**6	½
*38	14 WF 320 + PL	30 WF 132	A	1'-11½"	**8	**2	½
*39	14 WF 500	30 WF 190	A	1'-11½"	**8	**4	½

Notes:
1. See 12-JK1-68 for connection details.
2. * — beam at elevation other than El. 310 as shown on 12-JK1-68.
3. ** — use 1" ϕ H.S. bolts (A-490 friction type)

LICENSED PROFESSIONAL ENGINEER
LESLIE E. ROBERTSON
No. 34360
UNIVERSITY OF THE STATE OF NEW YORK

DRAWN S.C.
REVIEWED E.L.

12-JK1-67

SKILLING - HELLE - CHRISTIANSEN - ROBERTSON — Structural & Civil Engineers

PROJECT: THE WORLD TRADE CENTER | TITLE: BEAM TO COLUMN CONN. - WHERE COL. SPLICE 3" ABOVE FL | DATE: 1-29-68

REVISIONS
5-29-69

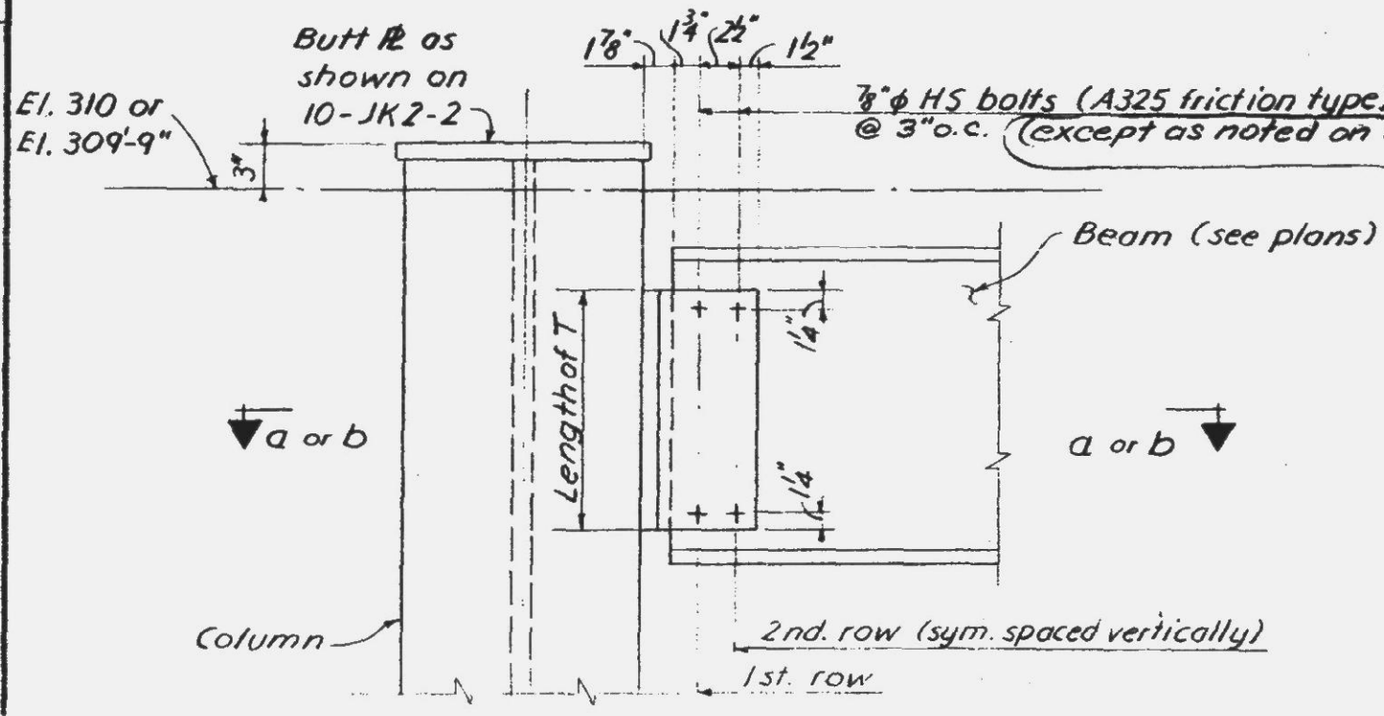

Weld A:
5/16" weld
3/8" weld for col. Fl. over 1½" to 24".
½" weld for col. Fl. over 2¼" to 6"
Provide full return at top.

Note:
1. Material of T to be A-36
2. See schedule on 12-JK1-67 for length of T & no. of bolts.

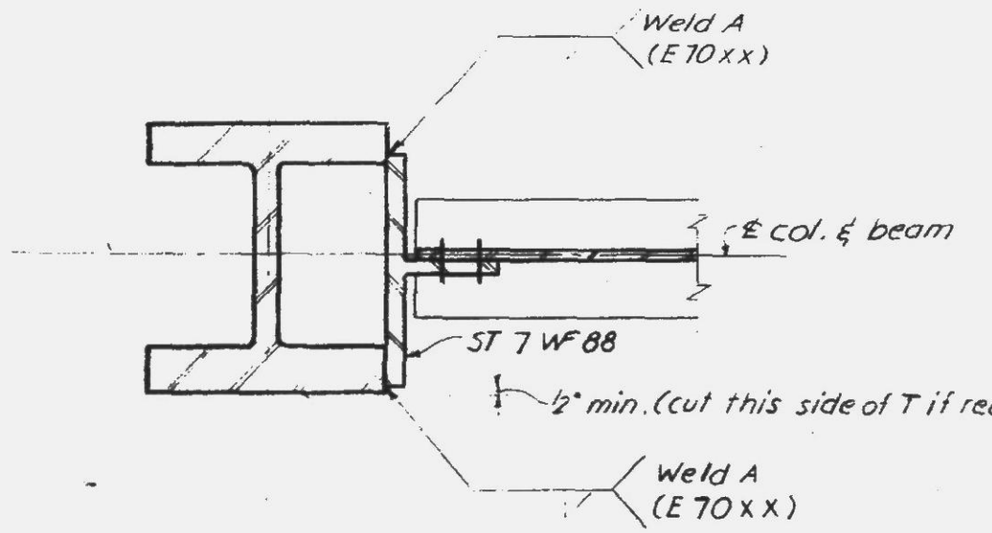

(Type A)
Section a-a

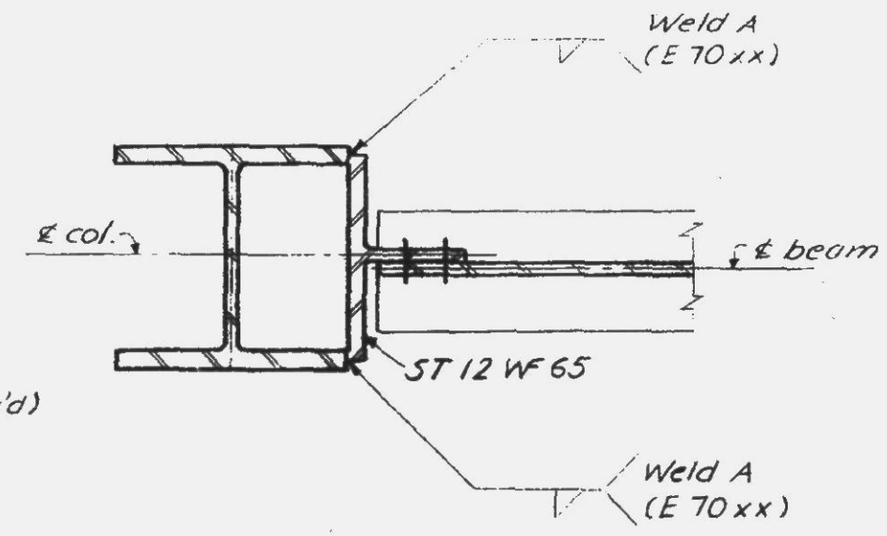

(Type B)
Section b-b

LICENSED PROFESSIONAL ENGINEER
LESLIE E. ROBERTSON
No. 34360
UNIVERSITY OF THE STATE OF NEW YORK

DRAWN S.C.
REVIEWED E.L.

12-JK1-68

SKILLING - HELLE - CHRISTIANSEN - ROBERTSON — Structural & Civil Engineers

PROJECT: THE WORLD TRADE CENTER | TITLE: DETAIL OF ELEVATOR SEPARATOR BEAMS | DATE: 2-9-68

REVISIONS
6-7-68
6-28-68
2-19-69

ELEVATOR NO	LOCATION OF BEAMS	ELEVATION AT TOP OF BM	LENGTH OF BEAMS	END CONN. DETAILS LEFT	END CONN. DETAILS RIGHT
J-1,2 & 3	EAST OF J-1	323'-6"	9'-7"	A	A
		319'-6"	9'-4½"		
		309'-8"	9'-7"		
		303'-6"			
		293'-8"			
		284'-2"			
		274'-2"			
		264'-2"			
		262'-6"			
		252'-8"	9'-7"		A
		251'-6"	9'-6"	A	B
		241'-8"	8'-6"	*	*
	WEST OF J-2 WEST OF J-3	323'-6"	9'-7"	A	A
		319'-6"	9'-4½"		
		309'-8"	9'-7"		
		303'-6"			
		293'-8"			
		284'-2"			
		274'-2"			
		264'-2"			
		252'-8"	9'-7"	A	A
		241'-8"	8'-10"	*	*

NOTE:-

1. * No seat Rq. Req'd. Beam end embedded in pocket formed in foundation wall.
2. See Dwg. 12-JK1-70 for type and detail of connection.

LICENSED PROFESSIONAL ENGINEER — LESLIE E. ROBERTSON — No. 34360 — UNIVERSITY OF THE STATE OF NEW YORK

DRAWN S.C.

REVIEWED E.L.

2-JK1-69

SKILLING, HELLE, CHRISTIANSEN, ROBERTSON — Structural & Civil Engineers

PROJECT: THE WORLD TRADE CENTER | TITLE: DETAIL OF ELEVATOR SEPARATOR BEAMS | DATE: 5-26-69

REVISIONS
3-30-70
5-18-70

Elevator No.	Location of beams	Elevation at top of beam	BEAM Size	BEAM Length	END CONN. DETAILS Left	END CONN. DETAILS Right
J-4	North of J-4	321'-7"	6×4×3/8 □	9'-3"	A	A
		315'-4"				
		309'-1"				
		302'-10"				
		296'-7"				A
		290'-4"				A**
		287'-8"		9'-3"	A	C
C-9		309'-10"		8'-10"	C	A
		301'-10"		9'-3½"	A	
		293'-10"		8'-10"		
K-1	North of K-1	321'-7"		9'-3"		
		315'-4"		9'-3"		A
		309'-1"		9'-0"		***
		302'-10"		9'-3"		A
		296'-7"		9'-3"		A
		290'-4"		9'-0"		***
		287'-8"		9'-0"		***
K-2	West of K-2	303'-0"	6×4×3/8 □	8'-2½"		A
		293'-8"	12B19 (Fy=42)	8'-0½"		
		280'-8"	6×4×3/8 □			
		267'-8"				
		256'-8"				
		252'-0"				
		241'-0"	6×4×3/8 □	8'-0½"	A	A

Elevator No.	Location of beams	Elevation at top of beam	BEAM Size	BEAM Length	END CONN. DETAILS Left	END CONN. DETAILS Right
K-3, 4 & 5	South of K-3 South of K-4	323'-6"	6×4×3/8 □	9'-7"	A	A
		319'-6"		9'-4½"		
		309'-8"		9'-7"		
		303'-6"				
		293'-8"				
		284'-2"				
		274'-2"				
		264'-2"				
		252'-8"		9'-7"	A	A
	South of K-3	241'-8"		8'-10"	*	A**
	North of K-5	323'-6"		9'-7"	A	A
		319'-6"		9'-4½"		
		309'-8"		9'-7"		
		303'-6"				
		293'-8"				
		284'-2"				
		274'-2"				
		264'-2"				
		262'-6"				
		252'-8"		9'-7"	A	
		251'-6"		9'-5"	B	A
	South of K-4 North of K-5	241'-8"		8'-0"	*	A**
H-1, 2 & 3	Btw. H-1 & H-2 Btw. H-2 & H-3	321'-2"		9'-3½"	A	A
		307'-2"				
H-4, 5 & 6	Btw. H-4 & H-5 Btw. H-5 & H-6	321'-2"				
		307'-2"		9'-3½"		
H-7, 8 & 9	East of H-7 West of H-8 West of H-9 East of H-9	321'-2"		11'-5"		
		307'-2"		11'-5"		
		293'-2"		11'-5"		
H-10		321'-2"		10'-9"		
		307'-2"		10'-9"		
		293'-2"	C×4×3/8 □	10'-9"	A	A

NOTES:

1. * — no seat ℄ & anchor req'd. Beam end embedded in pocket formed in foundation wall.
2. A** — indicates End Conn. Detail similar to Type A, except no seat ℄ & anchor req'd.
3. See Dwgs 12-JK1-70 & 70A for type & detail of connection.
4. *** — similar to Type A, with 7" embedment in concrete and base ℄ = 4"×5/8"×0'-6" long.

LICENSED PROFESSIONAL ENGINEER — LESLIE E. ROBERTSON — No. 34960 — UNIVERSITY OF THE STATE OF NEW YORK

DESIGNED
DRAWN S.C.
REVIEWED E.L.

12-JK1-69A

SKILLING - HELLE - CHRISTIANSEN - ROBERTSON — Consulting Civil Engineers

PROJECT THE WORLD TRADE CENTER | TITLE DETAILS OF ELEVATOR SEPARATOR BEAMS | DATE 2-9-68

REVISIONS
6-7-68
6-28-68
2-19-69
5-26-69

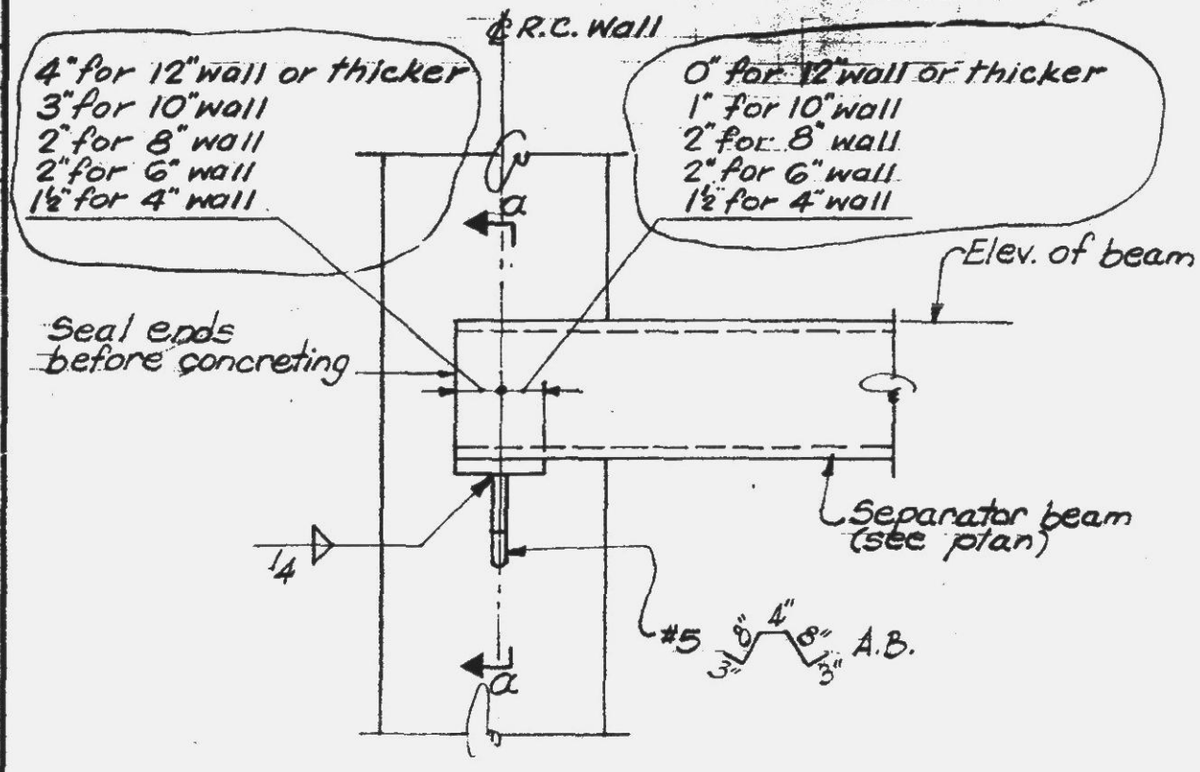

Type A

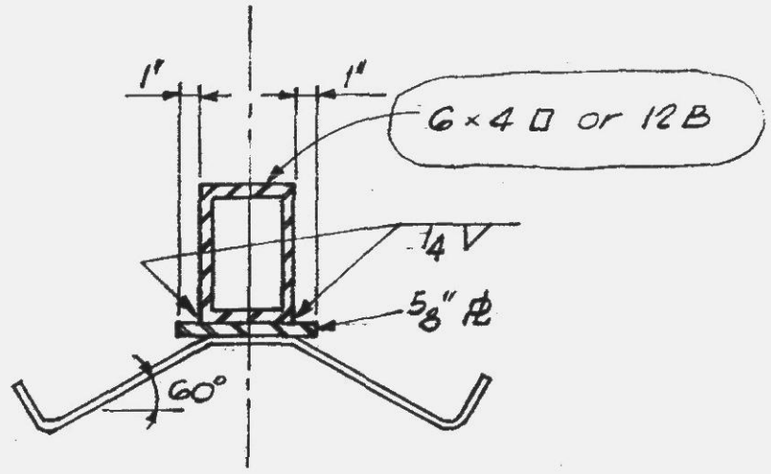

Section a-a

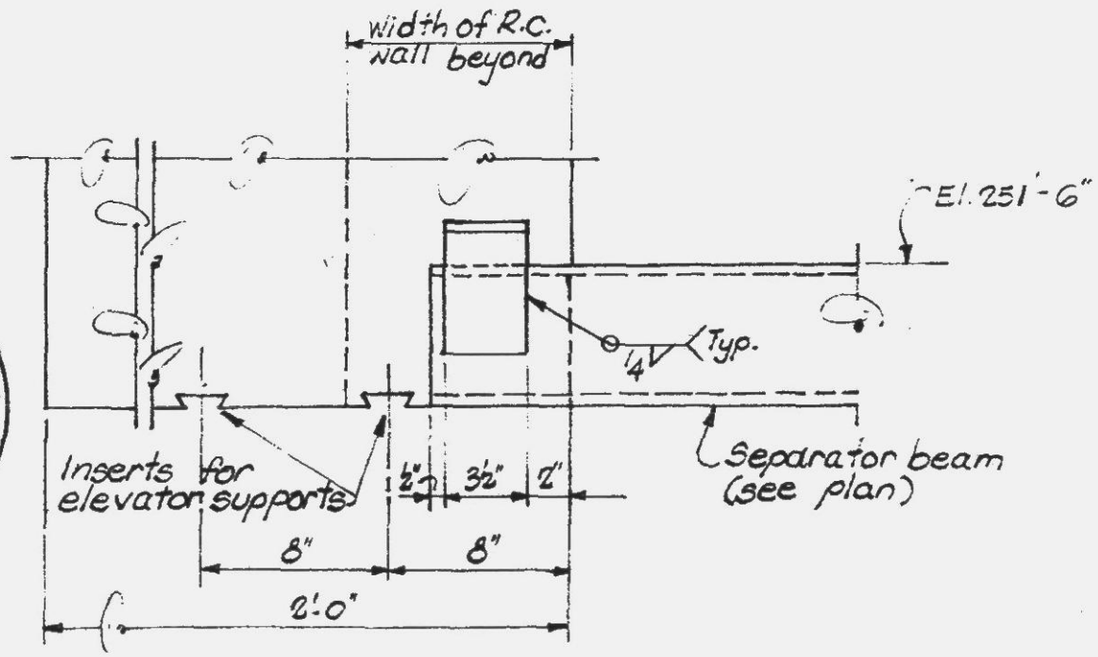

Type B

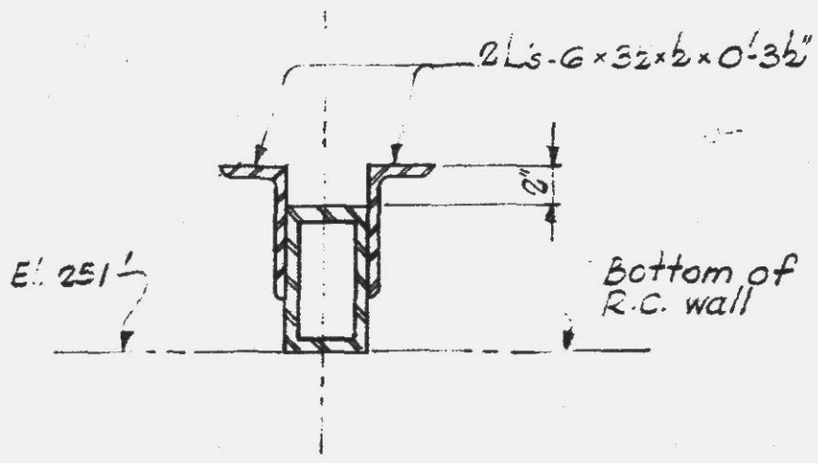

Section b-b

LICENSED PROFESSIONAL ENGINEER LESLIE E. ROBERTSON No. 34360 UNIVERSITY OF THE STATE OF NEW YORK

DRAWN S.C.
REVIEWED E.L.

12-JK1-70

SKILLING, HELLE, CHRISTIANSEN, ROBERTSON — Structural & Civil Engineers

PROJECT THE WORLD TRADE CENTER | TITLE DETAIL OF ELEVATOR SEPARATOR BEAMS | DATE 5-26-69

REVISIONS

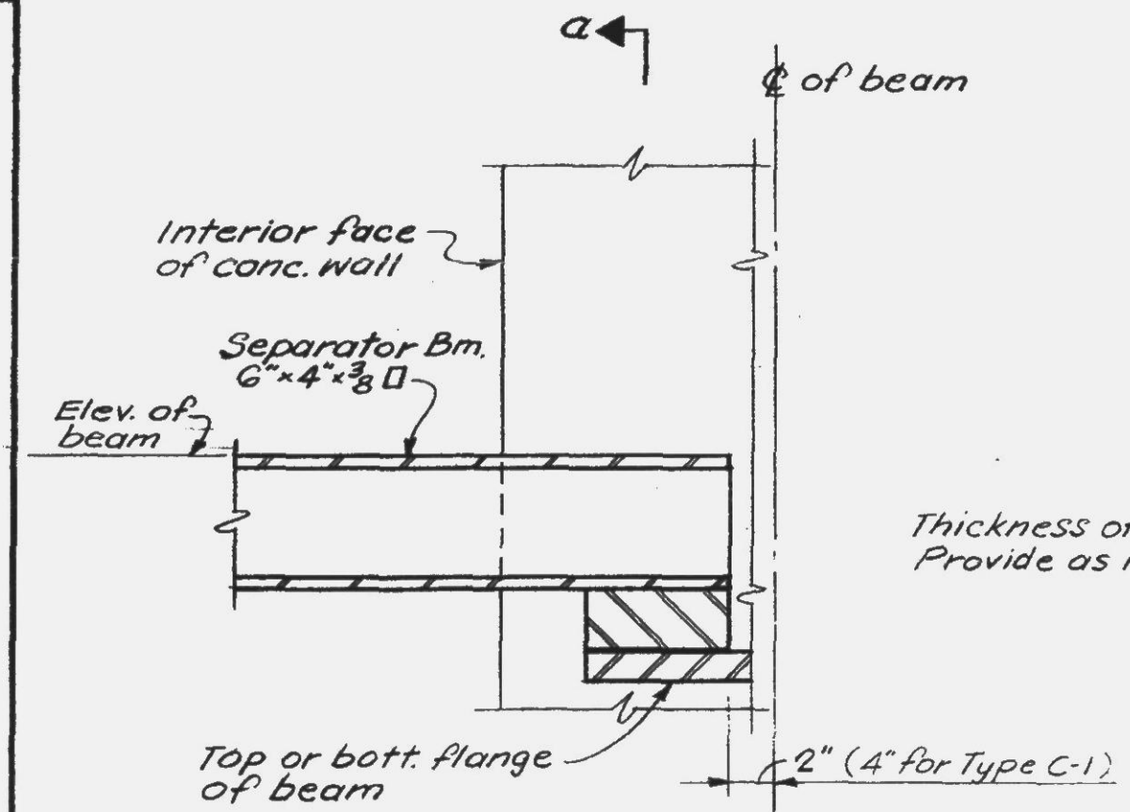

Type C

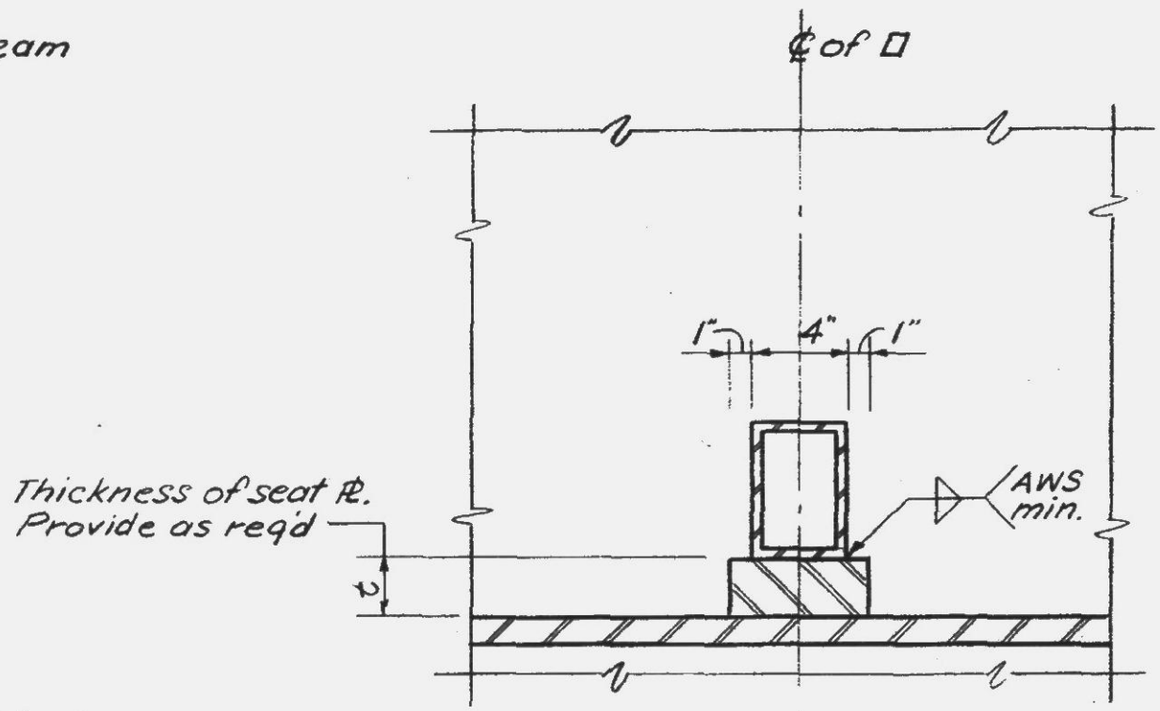

Section a-a

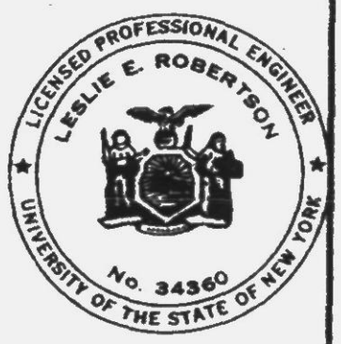

DESIGNED

DRAWN S.C.

REVIEWED E.L.

12-JK1-70A

SKILLING, HELLE, CHRISTIANSEN, ROBERTSON — Structural & Civil Engineers

PROJECT THE WORLD TRADE CENTER | TITLE ELEVATOR J-4 "BUMPER" BEAMS | DATE 5-26-69

REVISIONS

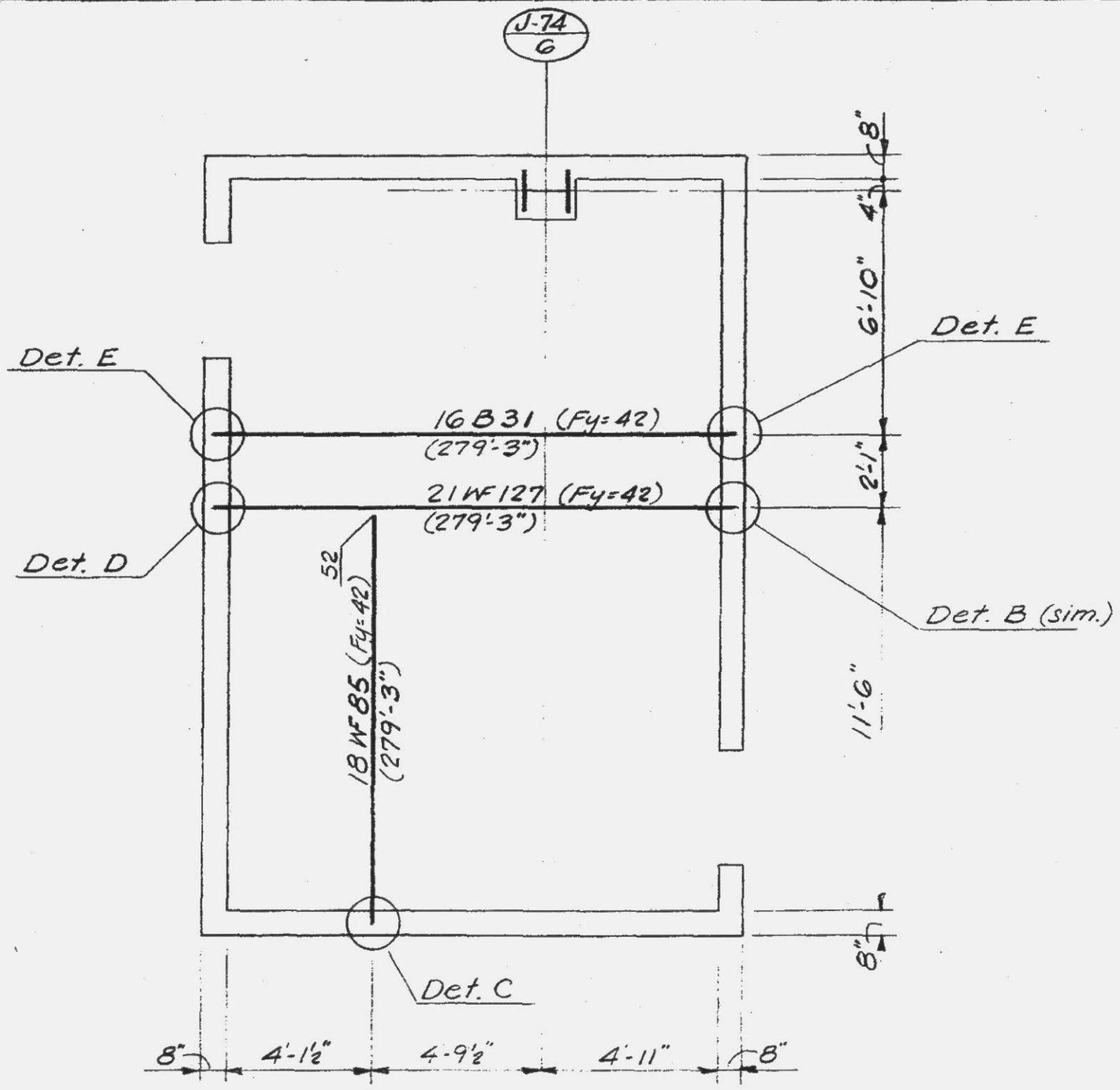

Plan

Note:
For details see 12-JK1-70F

LICENSED PROFESSIONAL ENGINEER
LESLIE E. ROBERTSON
No. 34360
UNIVERSITY OF THE STATE OF NEW YORK

DESIGNED

DRAWN
S.C.

REVIEWED
E.L.

12-JK1-70B

SKILLING, HELLE, CHRISTIANSEN, ROBERTSON — Structural & Civil Engineers

PROJECT: THE WORLD TRADE CENTER | TITLE: ELEVATOR C-9 "BUMPER" BEAMS | DATE: 5-26-69

REVISIONS
10-13-69

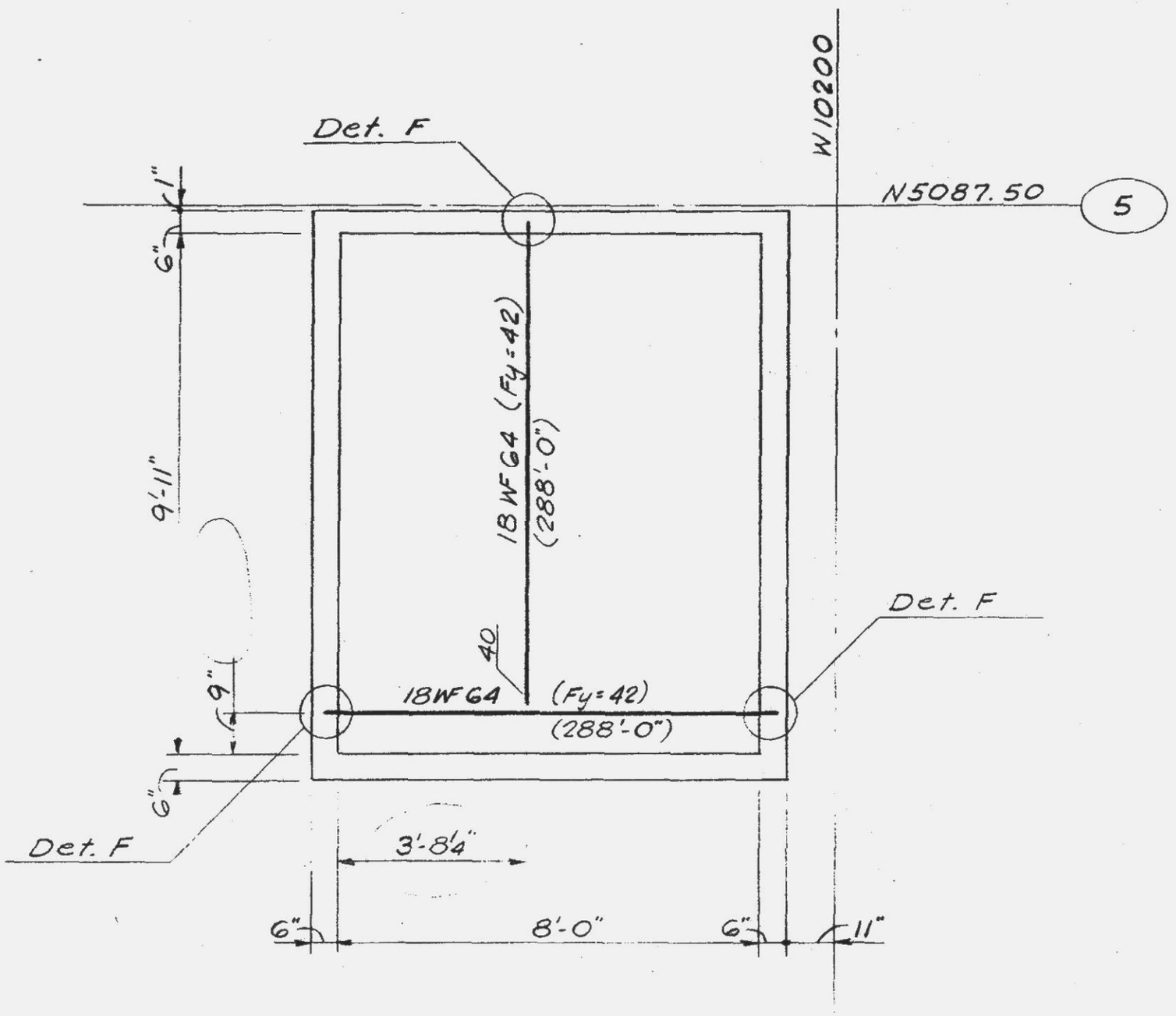

Plan

Note:
For details see 12-JK1-70F

LICENSED PROFESSIONAL ENGINEER
LESLIE E. ROBERTSON
No. 34360
UNIVERSITY OF THE STATE OF NEW YORK

DESIGNED

DRAWN
S.C.

REVIEWED
E.L.

12-JK1-70C

SKILLING, HELLE, CHRISTIANSEN, ROBERTSON — Structural & Civil Engineers

PROJECT THE WORLD TRADE CENTER | TITLE ELEVATOR C-10 "BUMPER" BEAMS | DATE 5-26-69

REVISIONS

10-13-69

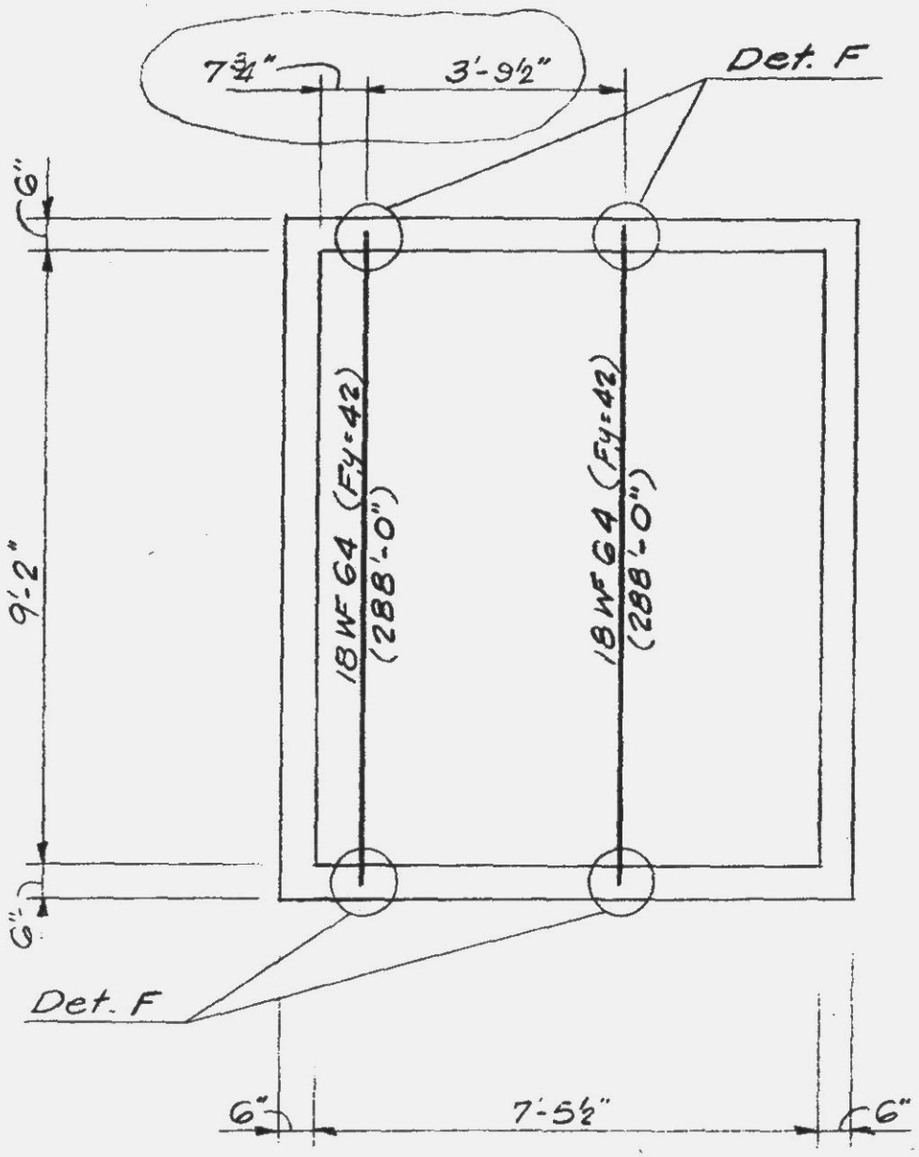

Plan

Note:
For details see 12-JK1-70F

LICENSED PROFESSIONAL ENGINEER
LESLIE E. ROBERTSON
No. 34360
UNIVERSITY OF THE STATE OF NEW YORK

DESIGNED

DRAWN
S.C.

REVIEWED
E.L.

12-JK1-70D

SKILLING, HELLE, CHRISTIANSEN, ROBERTSON — Structural & Civil Engineers

PROJECT: THE WORLD TRADE CENTER | TITLE: DETAIL OF "BUMPER" BEAM FOR ELEVATORS | DATE: 5-26-69

REVISIONS
5-26-70

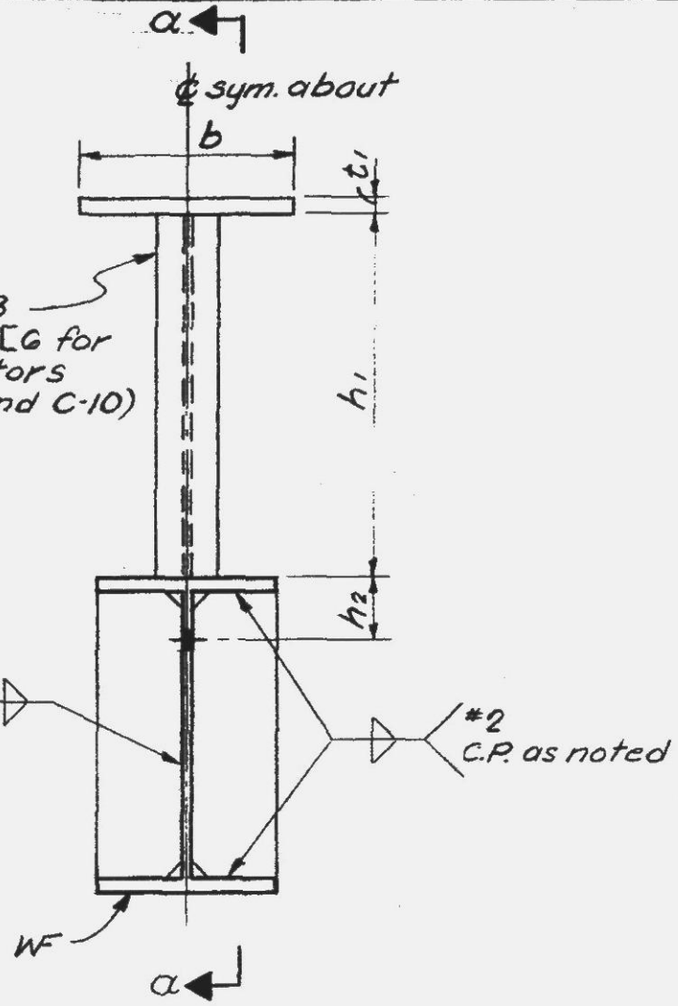

Elevation

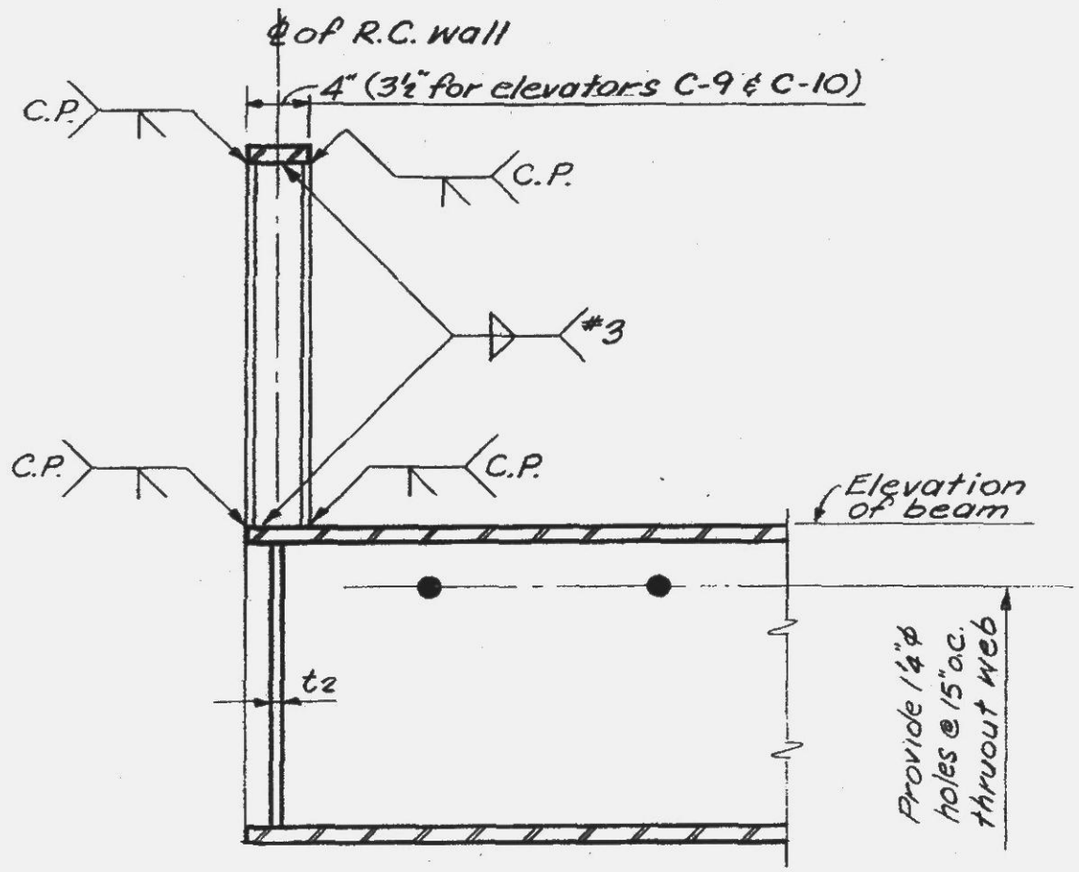

Section a-a

DETAIL No.	MEMBER SIZE	DIMENSIONS					WELD SIZE		
		t_1	t_2	b	h_1	h_2	#1	#2	#3
A	21 WF 112	2"	¾"	16"	4'-0"	2¼"	⅜	C.P.	⅜
B	21 WF 112	1"	½"	8"	2'-0"	2¼"	5/16	½	¼
C	18 WF 85	1¼"	⅝"	10"	2'-6"	2¼"	5/16	C.P.	5/16
D	21 WF 127	2"	¾"	16"	4'-0"	2¼"	⅜	C.P.	⅜
E	16 B 31					6"			
F	18 WF 64	1"	⅜"	8"	2'-6"	2¼"	⅜	C.P.	¼
G	21 B 49	1"	⅜"	8"	2'-0"	2¼"	5/16	C.P.	¼
H	18 B 40	1"	⅜"	8"	2'-0"	2¼"	5/16	C.P.	¼
J	21 WF 55	2"	⅝"	14"	3'-0"		5/16	C.P.	⅜
K	21 WF 62	2"	⅝"	14"	3'-0"		5/16	C.P.	⅜
L	21 WF 55	1⅜"	⅜"	10"	2'-6"		5/16	C.P.	¼
M	21 B 44					2¼"			

LICENSED PROFESSIONAL ENGINEER
LESLIE E. ROBERTSON
No. 34360
UNIVERSITY OF THE STATE OF NEW YORK

DESIGNED
DRAWN S.C.
REVIEWED E.L.

12-JK1-70F

SKILLING, HELLE, CHRISTIANSEN, ROBERTSON — Structural & Civil Engineers

PROJECT: THE WORLD TRADE CENTER | TITLE: BEAM DETAIL-ELEVATOR PITS | DATE: 1-14-72

REVISIONS

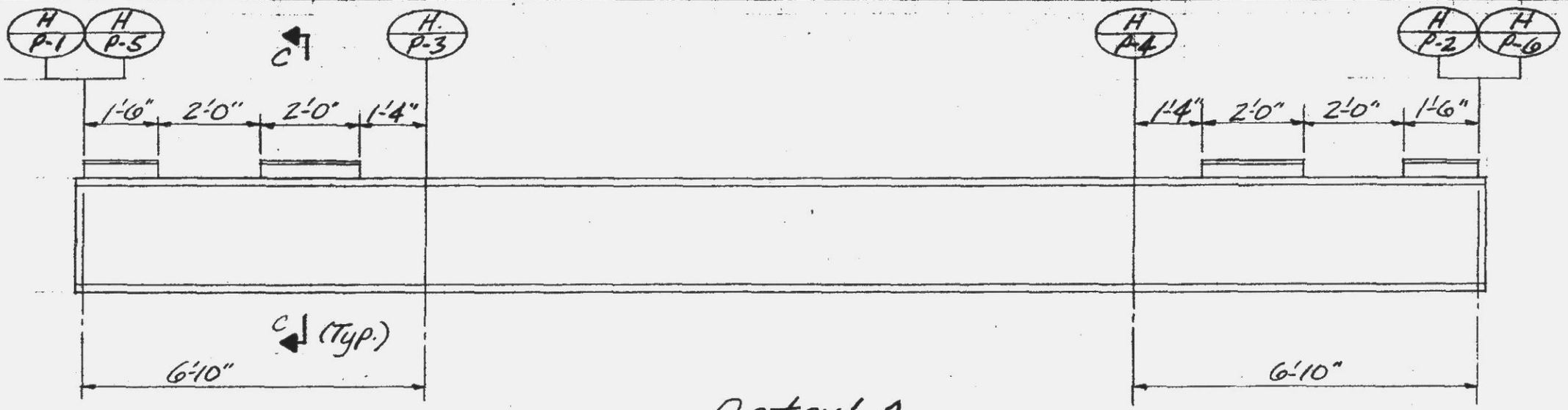

Detail A

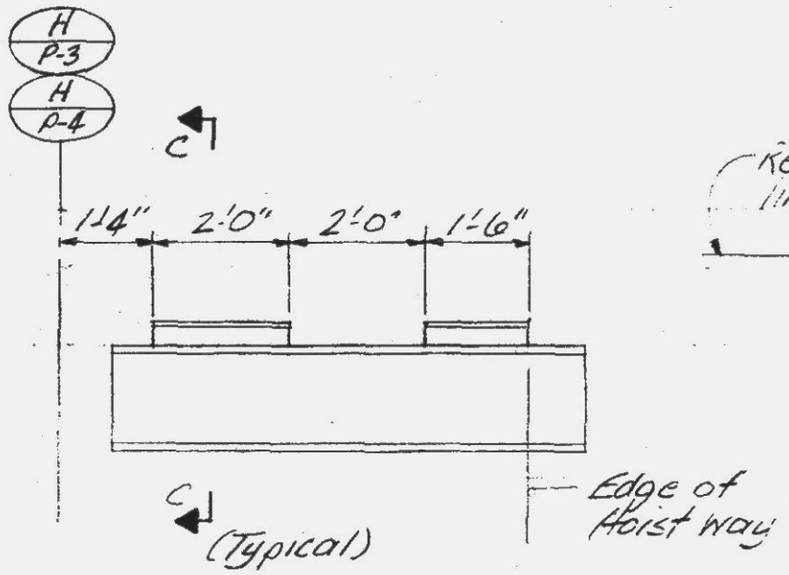

Detail B

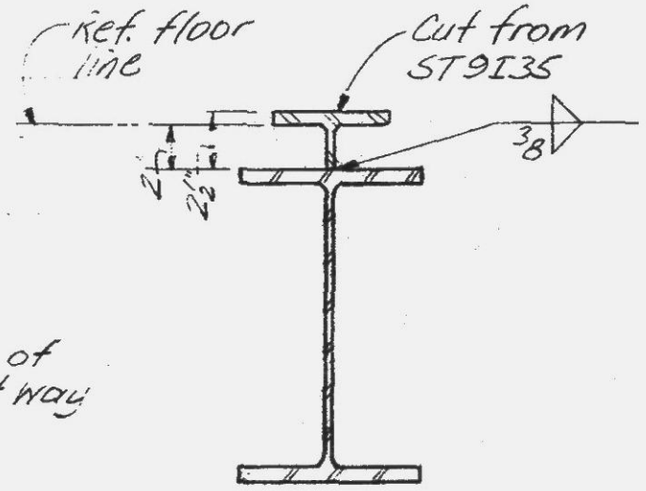

Detail C

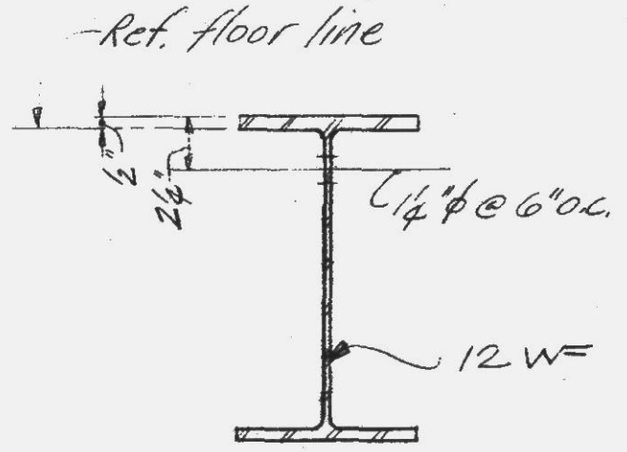

Section D-D

LICENSED PROFESSIONAL ENGINEER — LESLIE E. ROBERTSON — No. 34360 — UNIVERSITY OF THE STATE OF NEW YORK

DESIGNED

DRAWN

REVIEWED W Brewer

12-JKI-70G

SKILLING, HELLE, CHRISTIANSEN, ROBERTSON — Structural & Civil Engineers

PROJECT: THE WORLD TRADE CENTER | TITLE: BEAM DETAILS - ELEVATOR PITS | DATE: 1-15-72

REVISIONS

3-10-72
Complete Rev.

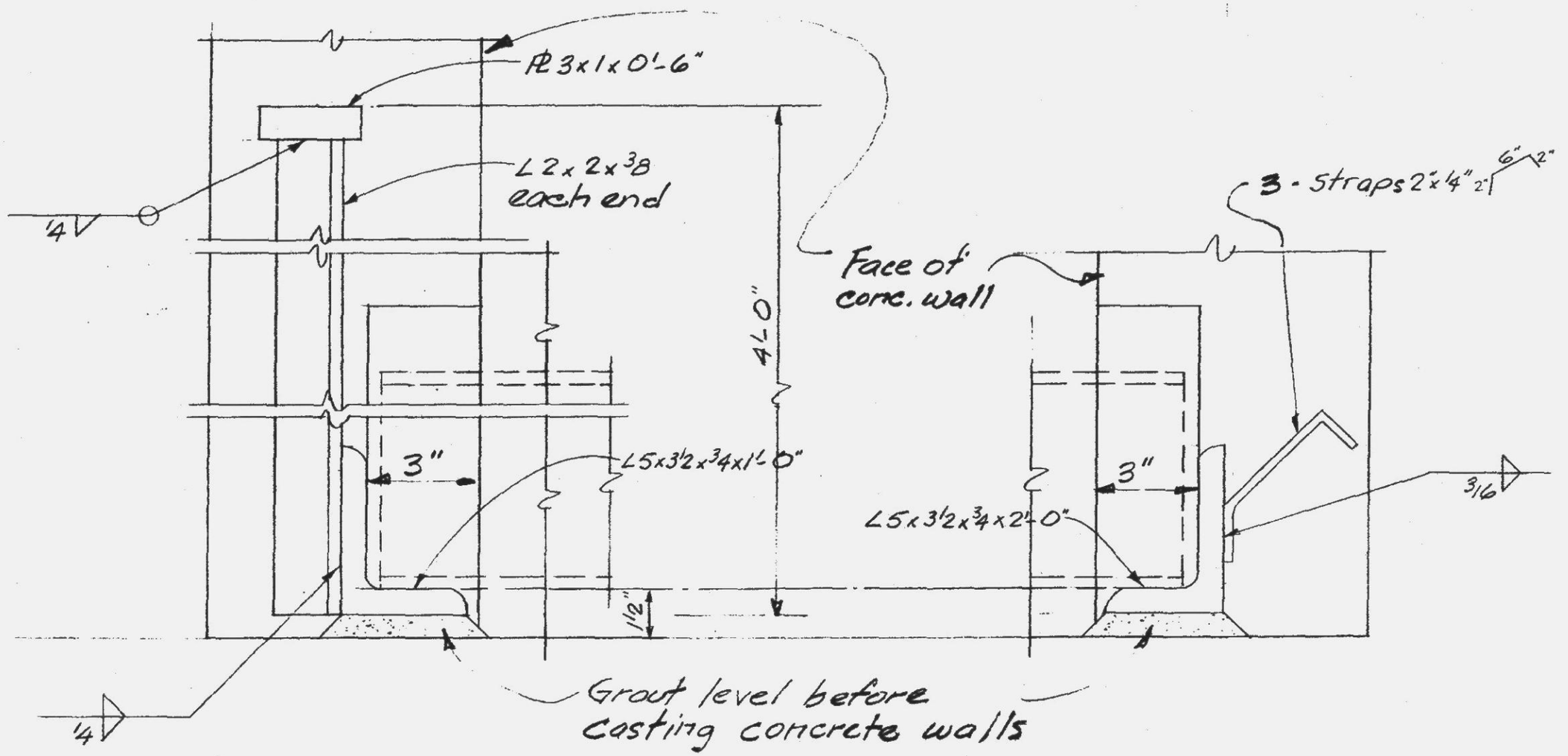

Detail E

Detail F

LICENSED PROFESSIONAL ENGINEER
LESLIE E. ROBERTSON
No 34360
UNIVERSITY OF THE STATE OF NEW YORK

DESIGNED

DRAWN
A. F.

REVIEWED
WCB

12-JK1-70H

SKILLING - HELLE - CHRISTIANSEN - ROBERTSON Structural & Civil Engineers

PROJECT THE WORLD TRADE CENTER | TITLE BEAM DETAIL UNDER EXIST. TEL. MANHOLE | DATE 4-5-68

REVISIONS
3-21-69

85 93

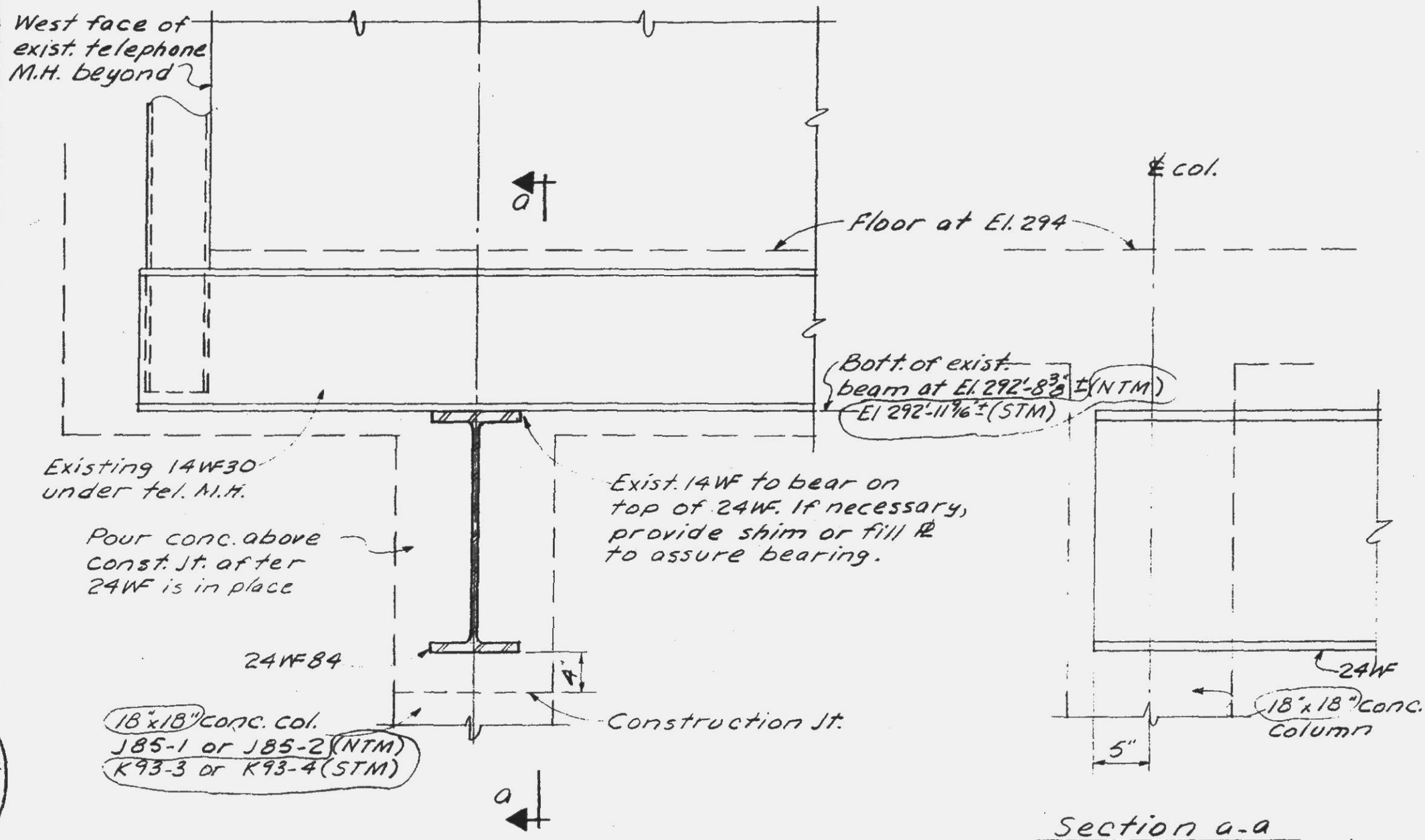

Section a-a
(Opp. hand at col. J85-1)

Notes:
1. (NTM) — North telephone manhole.
(STM) — South telephone manhole.

LICENSED PROFESSIONAL ENGINEER
LESLIE E. ROBERTSON
No. 34360
UNIVERSITY OF THE STATE OF NEW YORK

DRAWN
S.C.
REVIEWED
E.L.

12-JK1-71

SKILLING - HELLE - CHRISTIANSEN - ROBERTSON — Structural & Civil Engineers

PROJECT THE WORLD TRADE CENTER | TITLE BEAM DETAIL UNDER EXIST. TELEPHONE MANHOLE | DATE 4-5-68

REVISIONS

3-21-69

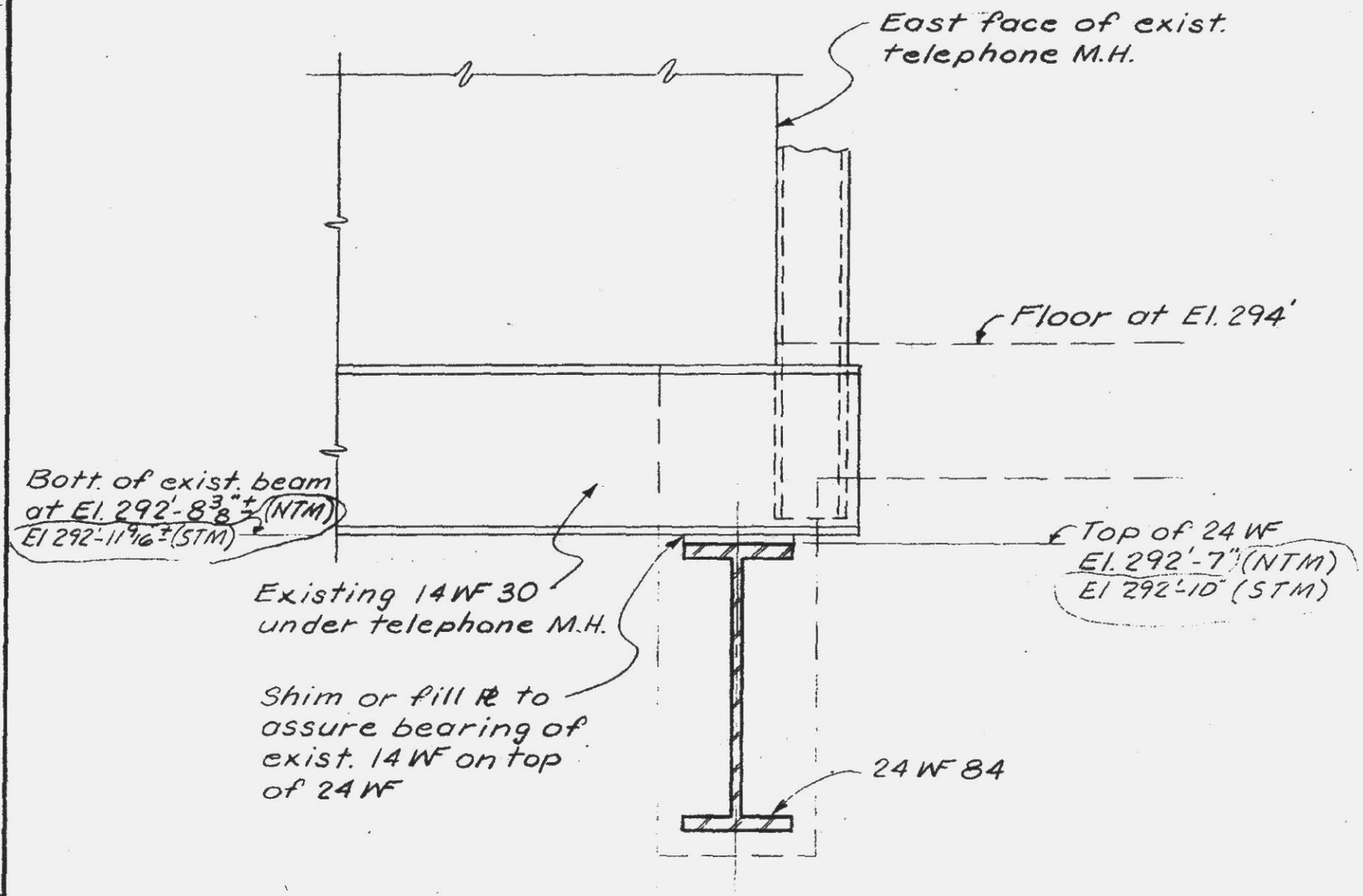

Notes:
1. (NTM) — North telephone manhole.
(STM) — South telephone manhole.

LICENSED PROFESSIONAL ENGINEER
LESLIE E. ROBERTSON
No. 34360
UNIVERSITY OF THE STATE OF NEW YORK

DRAWN
S.C

REVIEWED
E.L.

12-JK1-72

SKILLING - HELLE - CHRISTIANSEN - ROBERTSON Structural & Civil Engineers

PROJECT THE WORLD TRADE CENTER | TITLE DETAIL OF POSTS | DATE 4-5-68

REVISIONS

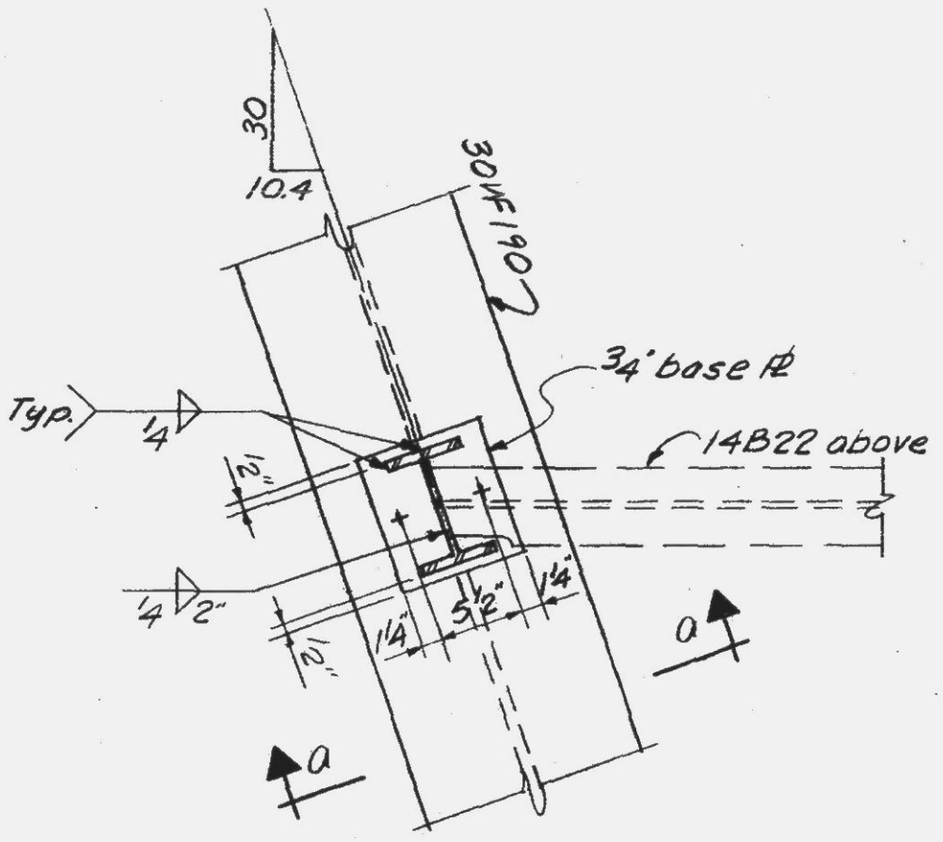

Plan

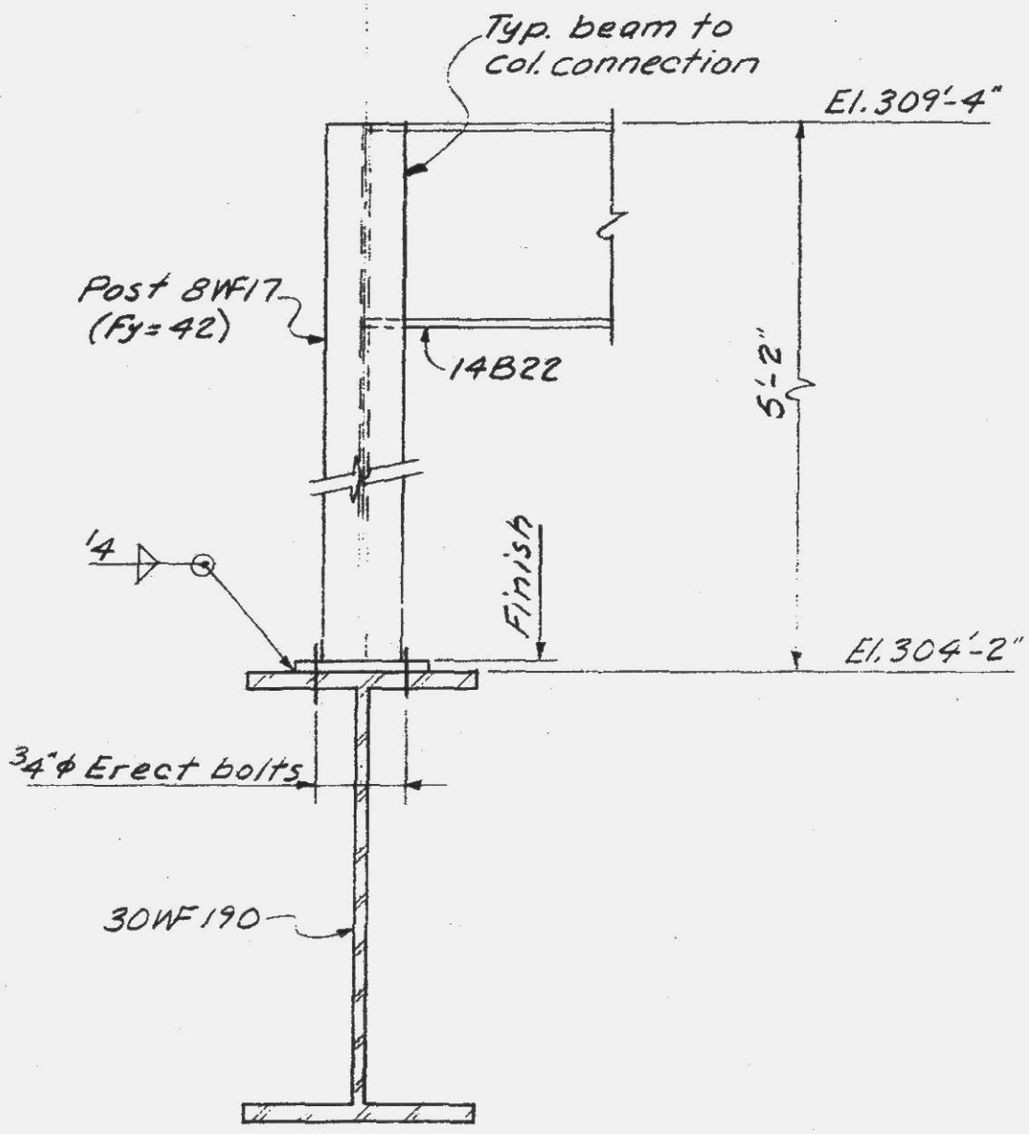

Section a-a

LICENSED PROFESSIONAL ENGINEER
LESLIE E. ROBERTSON
No. 34360
UNIVERSITY OF THE STATE OF NEW YORK

12-JK1-73

SKILLING - HELLE - CHRISTIANSEN - ROBERTSON — Structural & Civil Engineers

PROJECT: THE WORLD TRADE CENTER | TITLE: DETAIL OF POSTS | DATE: 4-5-68

REVISIONS
6-7-68
2-4-69
3-21-69

Detail No.	Size of Post	Weld A	Weld B
1	8WF17	1/4	1/4
2	10WF33	1/4	1/4
3	10WF49	5/16	1/4
4	10WF33	1/4	1/4

Detail No.	Size of Post	Weld A	Weld B

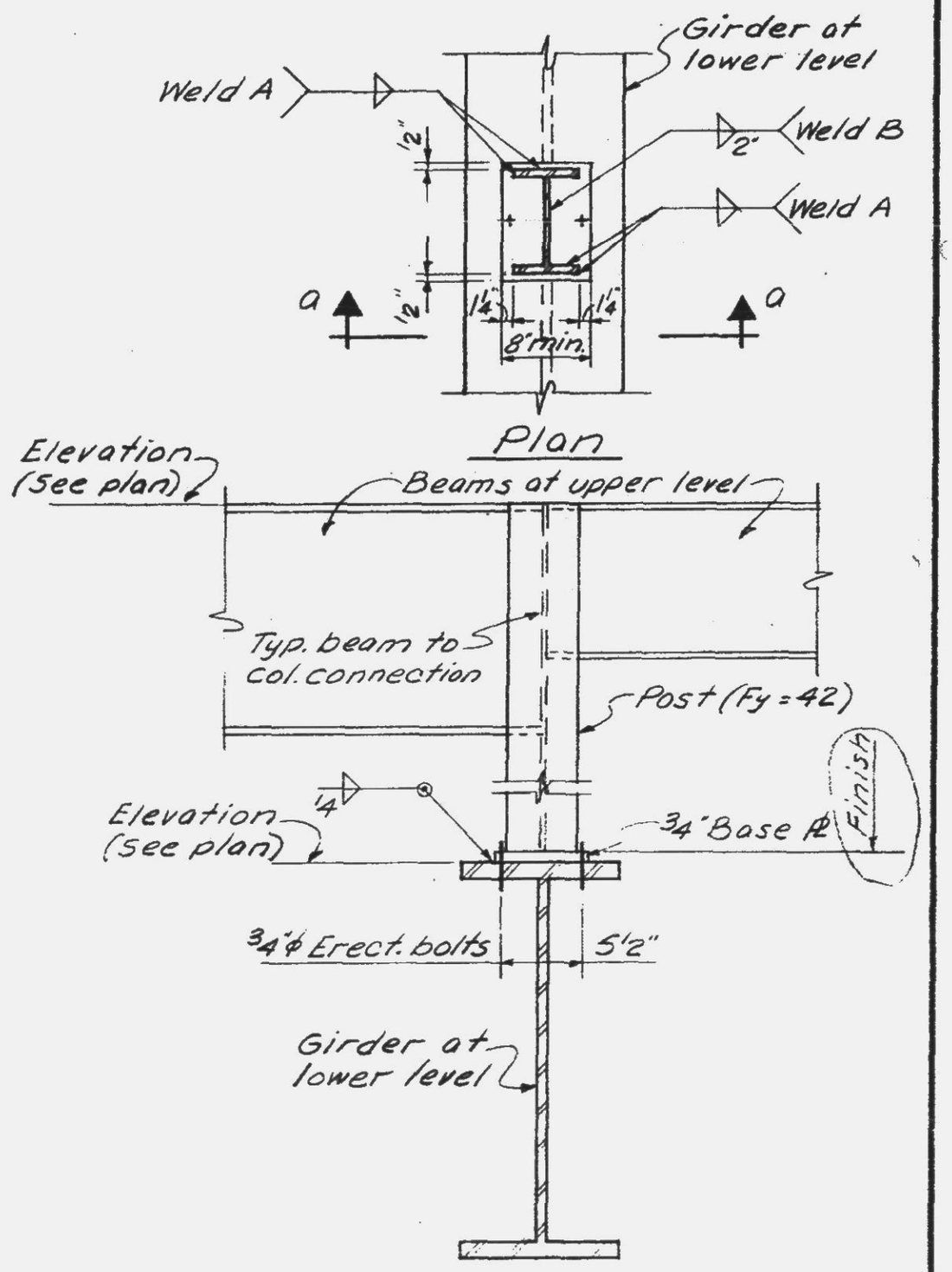

Section a-a

LICENSED PROFESSIONAL ENGINEER
LESLIE E. ROBERTSON
No. 34360
UNIVERSITY OF THE STATE OF NEW YORK

DRAWN
S.C.

REVIEWED
E.L.

12-JK1-74

SKILLING - HELLE - CHRISTIANSEN - ROBERTSON — Structural & Civil Engineers

PROJECT THE WORLD TRADE CENTER | TITLE DETAIL OF HANGERS | DATE 4-5-68

REVISIONS
- 6-7-68
- 7-19-68
- 9-4-68
- 11-5-68
- 1-8-69
- 3-21-69
- 7-19-72

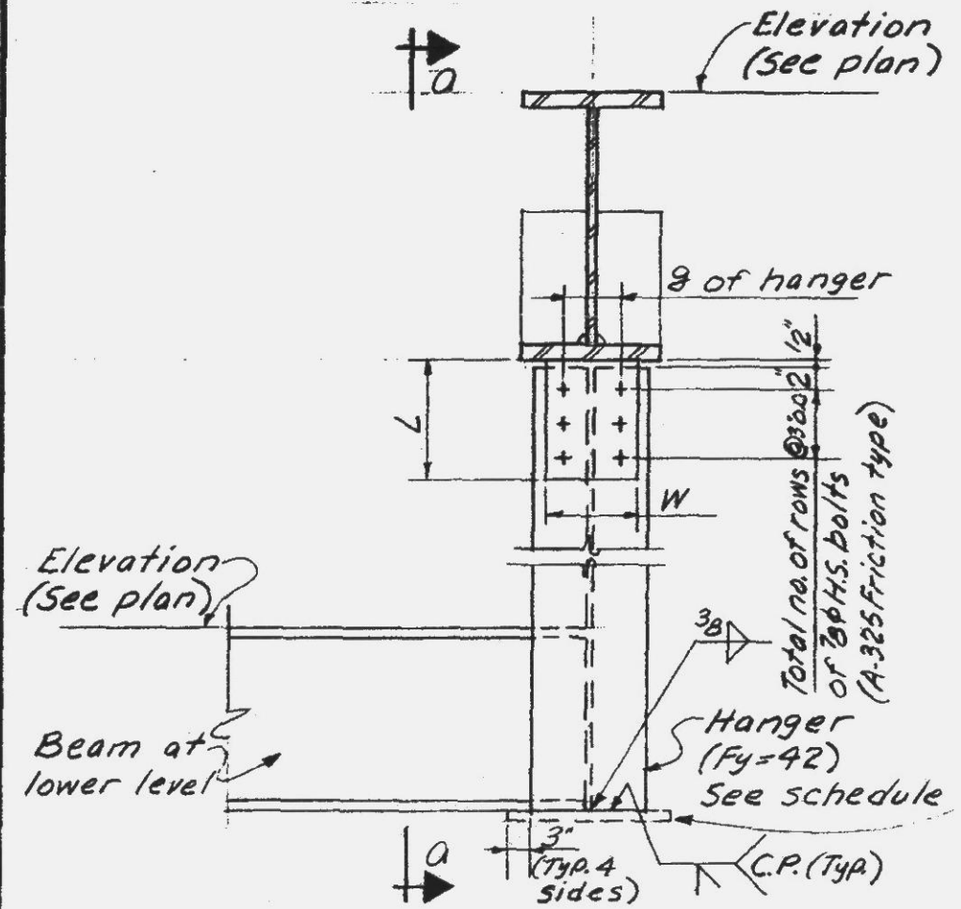

Elevation

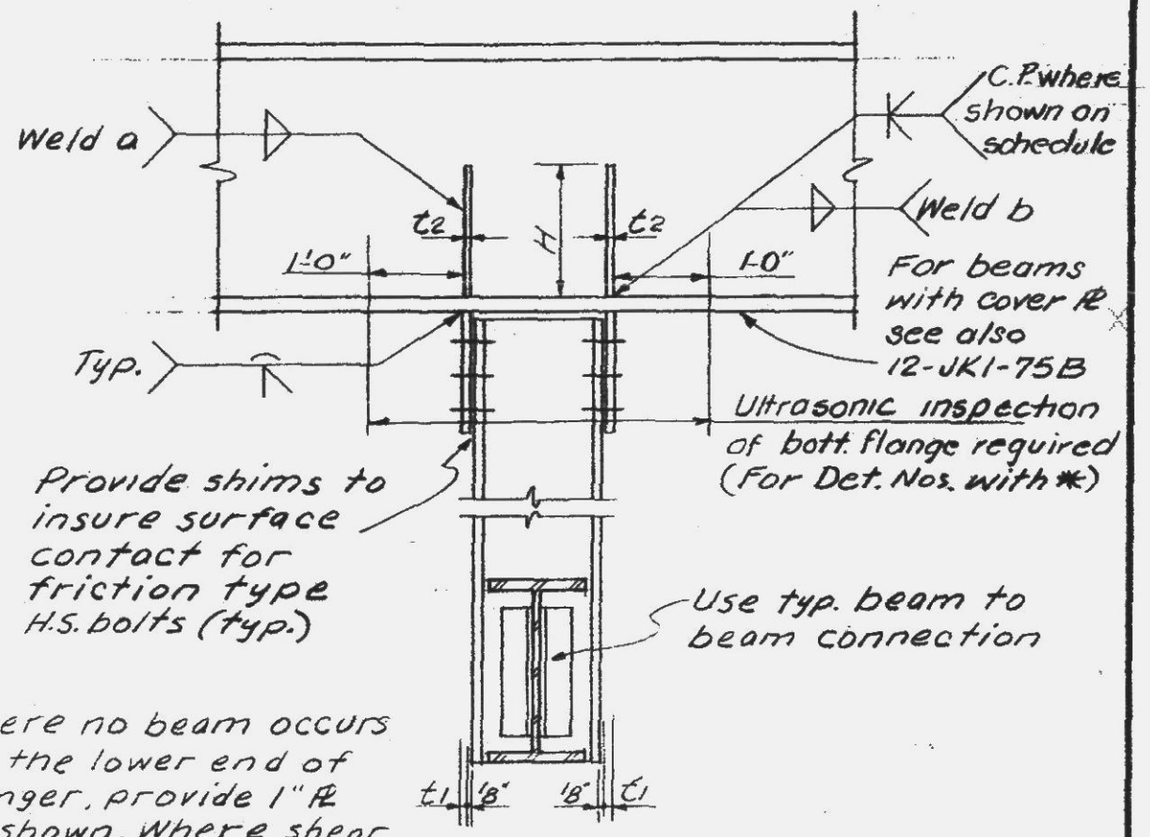

Where no beam occurs at the lower end of hanger, provide 1" PL as shown. Where shear head occurs see detail on 10-JK2-35

Section a-a

Detail No.	Size of Hanger	Plates t1	t2	L	W	H	No. of Rows of Bolts	Weld a	Weld b
1	12WF50	5/8	3/8	7"	8 1/2"	10"	2	1/4	1/4
2	12WF50	5/8	3/8	10"	8 1/2"	12"	3	1/4	5/16
3 *	12WF36 (See col. sch.)	3/4	3/4	13"	6"	12"	4	3/8	C.P.
4 *	12WF36 (See Col. sch.)	3/4	3/4	16"	6"	14	5	3/8	C.P.
5	10WF45	5/8	1/2	16"	8 1/2"	12"	5	5/16	C.P.
6*	14WF142 (See Col. sch.)	3/4	3/4	13"	8 1/2"	12"	4	3/8	C.P.
7	14WF38	5/8	1/2	13"	6 1/2"	10"	4	5/16	C.P.
8	14WF43	5/8	1/2	10"	8 1/2"	10"	3	5/16	C.P.
9	12WF53	5/8	3/8	7"	8 1/2"	10"	2	1/4	1/4

Detail No.	Size of Hanger	Plates t1	t2	L	W	H	No. of Rows of Bolts	Weld a	Weld b

LICENSED PROFESSIONAL ENGINEER — LESLIE E. ROBERTSON — No. 34360 — UNIVERSITY OF THE STATE OF NEW YORK

12-24-68
DRAWN S.C.
REVIEWED E.L.

12-JK1-75

SKILLING, HELLE, CHRISTIANSEN, ROBERTSON — Structural & Civil Engineers

PROJECT: THE WORLD TRADE CENTER | TITLE: DETAIL AT BOTTOM OF HANGER | DATE: 11-5-68

REVISIONS
4-18-69

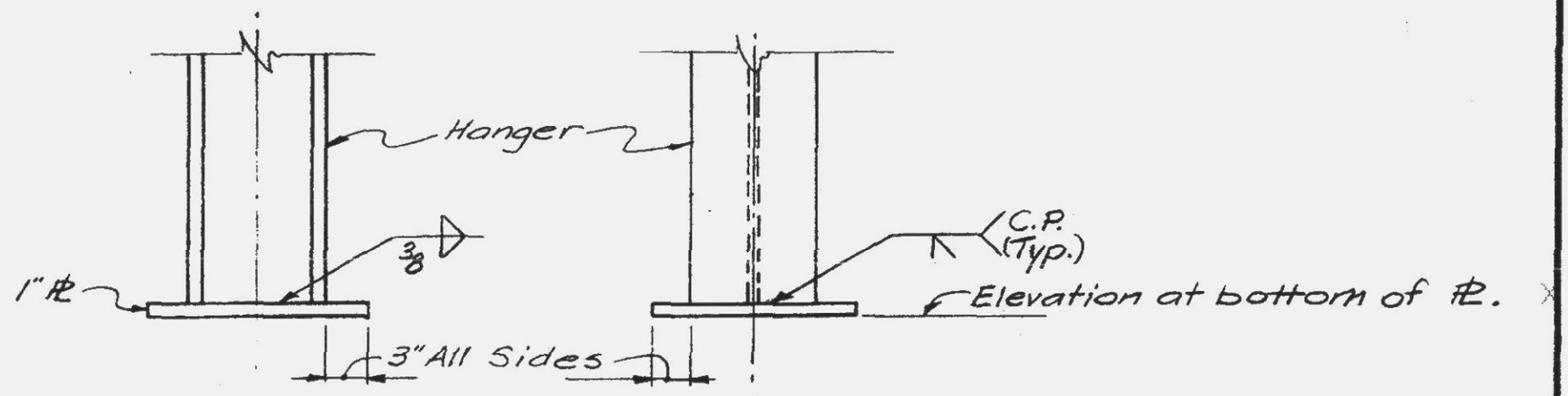

Detail No.	Elevation of Bottom ℄
1	El. 272'-7"
2	El. 271'-8"
3	El. 271'-8"
4	El. 271'-8"
5	El. 273'-3"
6	El. 277'-5"
7	El. 277'-5"
8	El. 278'-6"
9	El. 277'-5"
10	El. 267'-11"

Detail No.	Elevation of Bottom ℄

Notes:
1. All ℄s to have Fy = 36 ksi.
2. All welds to be E70xx.

LICENSED PROFESSIONAL ENGINEER — LESLIE E. ROBERTSON — No. 34300 — STATE OF NEW YORK

DESIGNED

DRAWN
S.C.

REVIEWED
E.L.

12-JK1-75A

SKILLING, HELLE, CHRISTIANSEN, ROBERTSON — Structural & Civil Engineers

PROJECT: THE WORLD TRADE CENTER | TITLE: DETAIL OF HANGER UNDER BEAMS WITH COVER PL | DATE: 11-5-68

REVISIONS

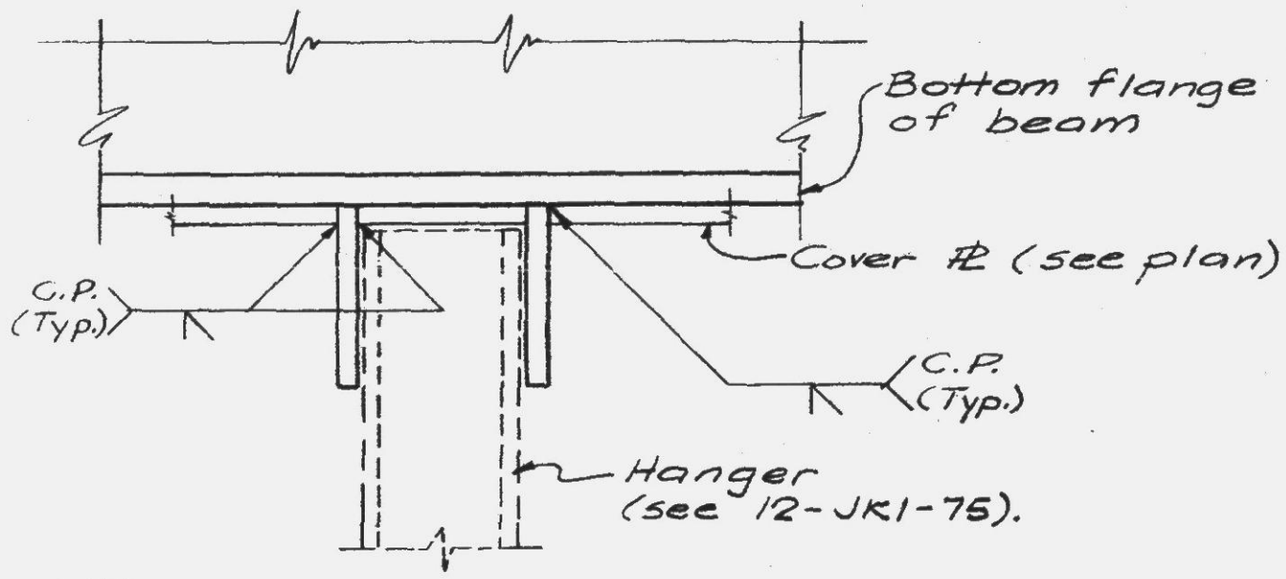

NOTES:

1. All other details, see 12-JK1-75.
2. All welds to be E70XX.

DESIGNED

DRAWN

REVIEWED

12-JK1-75B

SKILLING, HELLE, CHRISTIANSEN, ROBERTSON — Structural & Civil Engineers

PROJECT: THE WORLD TRADE CENTER | TITLE: DETAIL OF HANGER | DATE: 3-21-69

REVISIONS

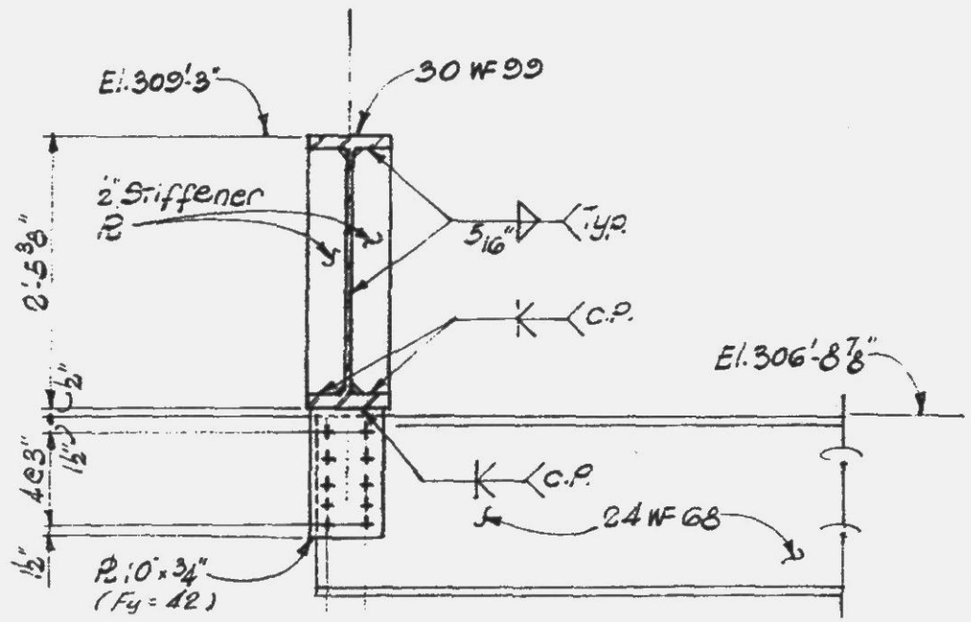

5 1/2" — 10-7/8" ϕ H.S. Bolts (A325 Friction Type)

LICENSED PROFESSIONAL ENGINEER
LESLIE E. ROBERTSON
No. 34360
UNIVERSITY OF THE STATE OF NEW YORK

DESIGNED

DRAWN
S.T.M.

REVIEWED
E.L.

10-JK-T5C

SKILLING - HELLE - CHRISTIANSEN - ROBERTSON Structural & Civil Engineers

PROJECT THE WORLD TRADE CENTER | TITLE BEAM CONNECTION DETAIL | DATE 4-5-68

REVISIONS

7-19-68

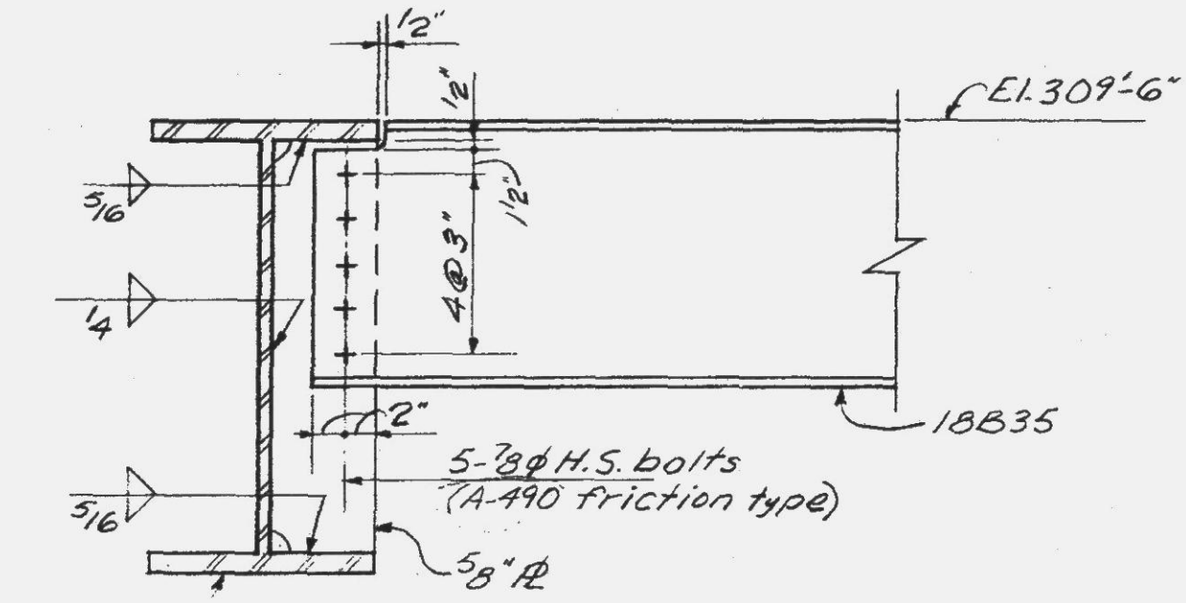

LICENSED PROFESSIONAL ENGINEER
LESLIE E. ROBERTSON
No. 34360
UNIVERSITY OF THE STATE OF NEW YORK

12-JK1-76

SKILLING - HELLE - CHRISTIANSEN - ROBERTSON Structural & Civil Engineers

PROJECT THE WORLD TRADE CENTER | TITLE DETAIL OF POSTS | DATE 4-5-68

REVISIONS

7-19-68

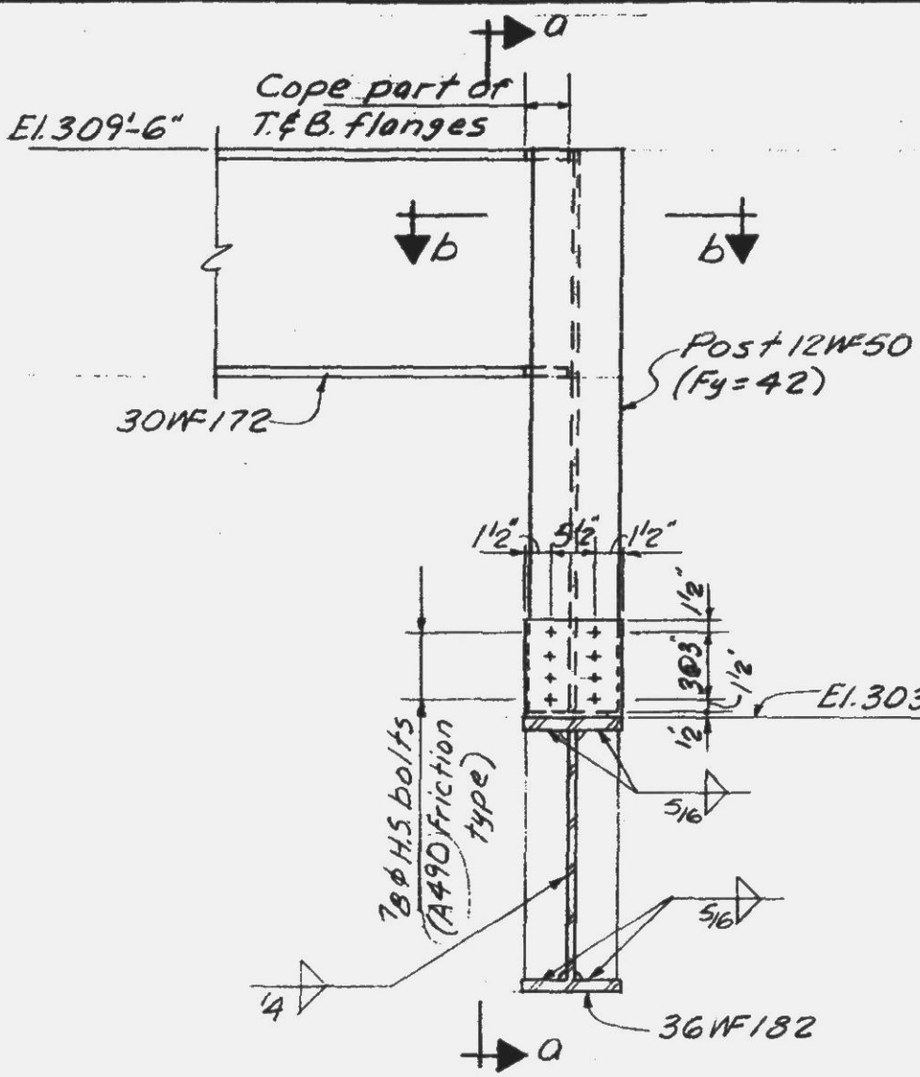

Elevation

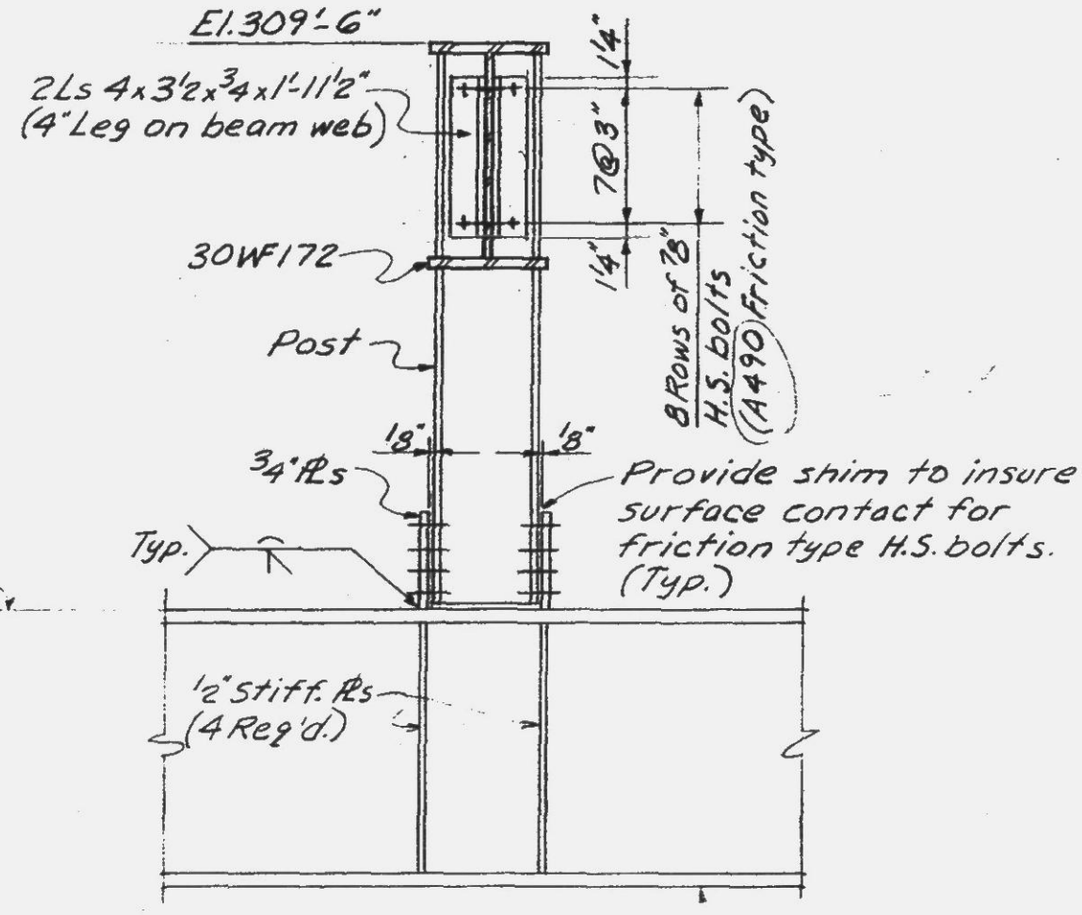

Section a-a

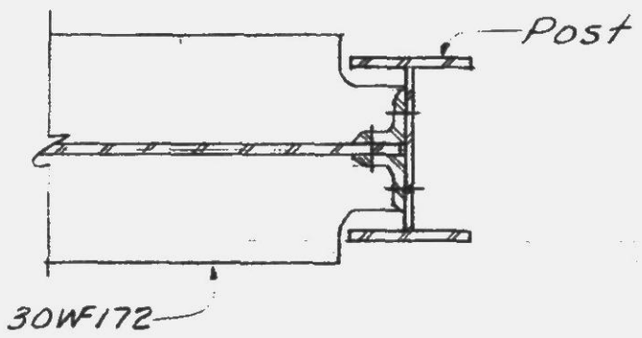

Section b-b

LICENSED PROFESSIONAL ENGINEER
LESLIE E. ROBERTSON
No. 34360
STATE OF NEW YORK

12-JK1-77

SKILLING - HELLE - CHRISTIANSEN - ROBERTSON — Structural & Civil Engineers

PROJECT: THE WORLD TRADE CENTER | TITLE: FLOOR BEAM DIAPHRAGM DETAILS | DATE: 6-7-68

REVISIONS

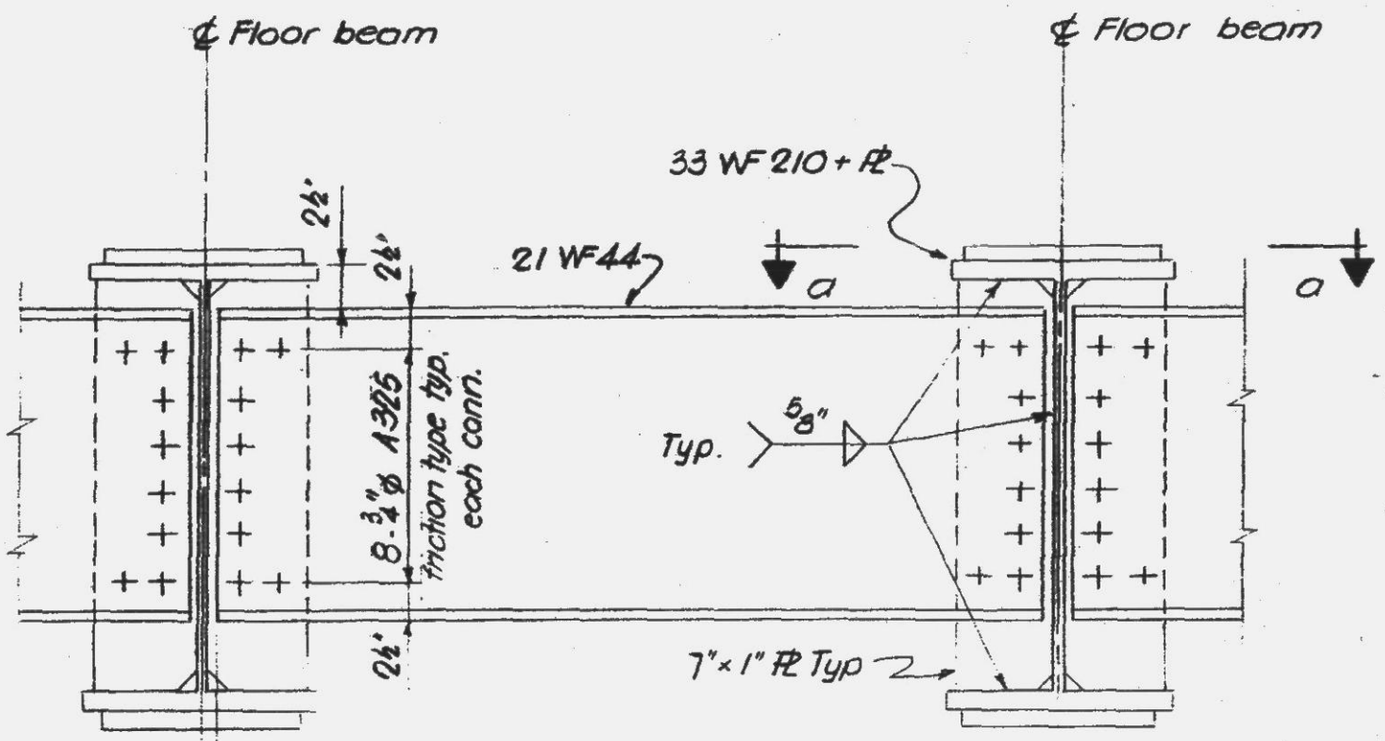

Elevation - typical Diaphragm

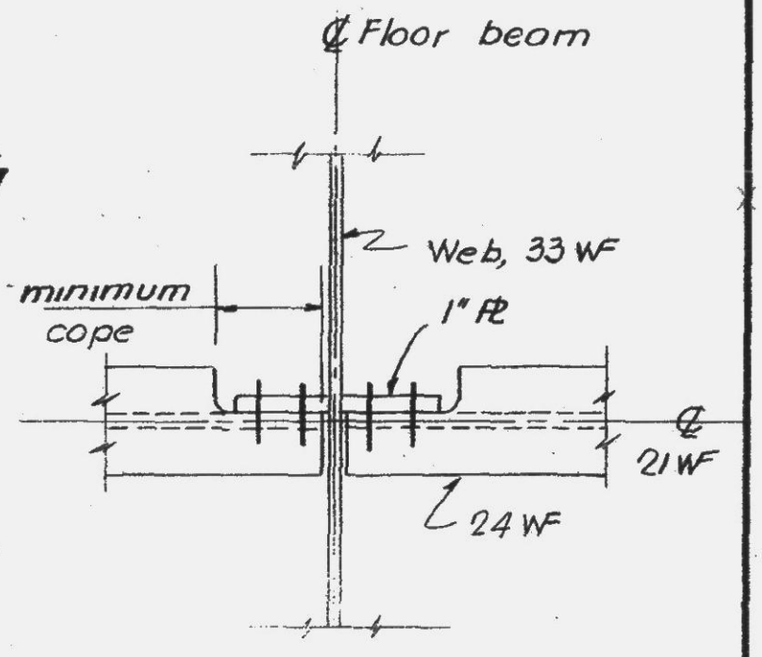

Section a-a

Ref dwgs: SJ-76, SJ-77

LICENSED PROFESSIONAL ENGINEER
LESLIE E. ROBERTSON
No. 34360
UNIVERSITY OF THE STATE OF NEW YORK

12-JK1-78

SKILLING, HELLE, CHRISTIANSEN, ROBERTSON — Civil Engineers

PROJECT: THE WORLD TRADE CENTER | TITLE: BEAM CONNECTION DETAIL

REVISIONS

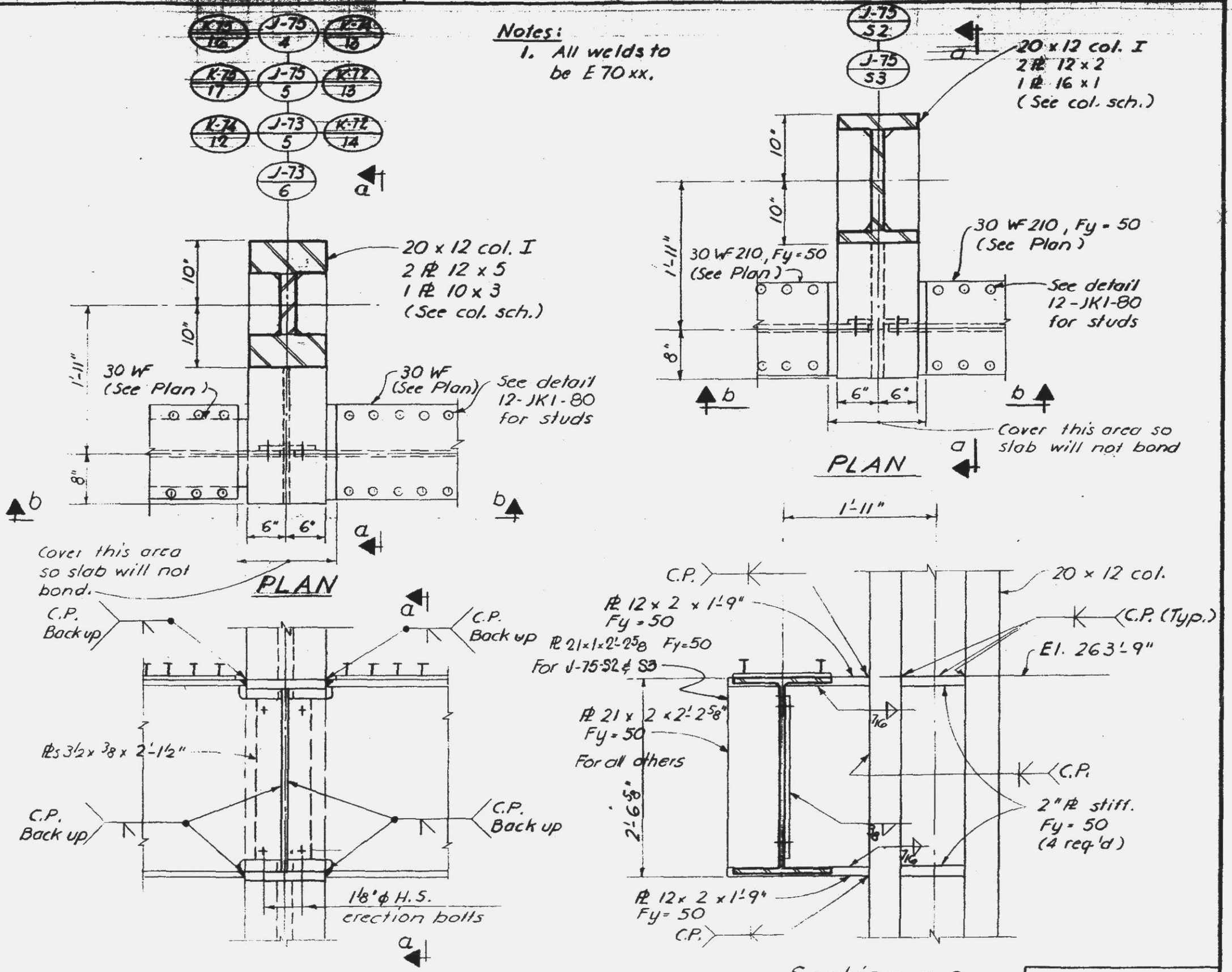

12-JK1-79

LICENSED PROFESSIONAL ENGINEER
LESLIE E. ROBERTSON
No. 34360
UNIVERSITY OF THE STATE OF NEW YORK

SKILLING, HELLE, CHRISTIANSEN, ROBERTSON — Structural Consulting Engineers

PROJECT: [illegible] — DATE: [illegible]

REVISIONS
7-19-68
9-4-68

Notes
1. All welds to be E 70 xx.

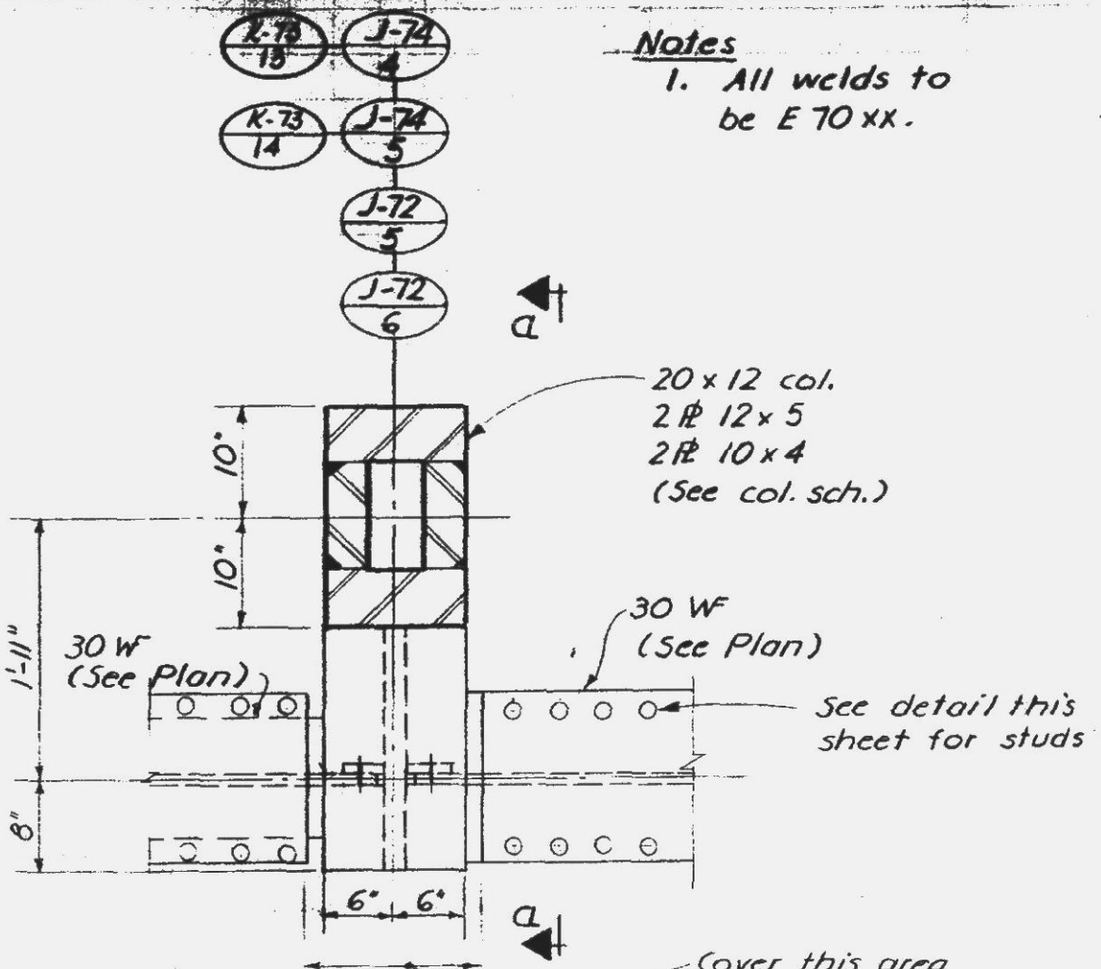

PLAN

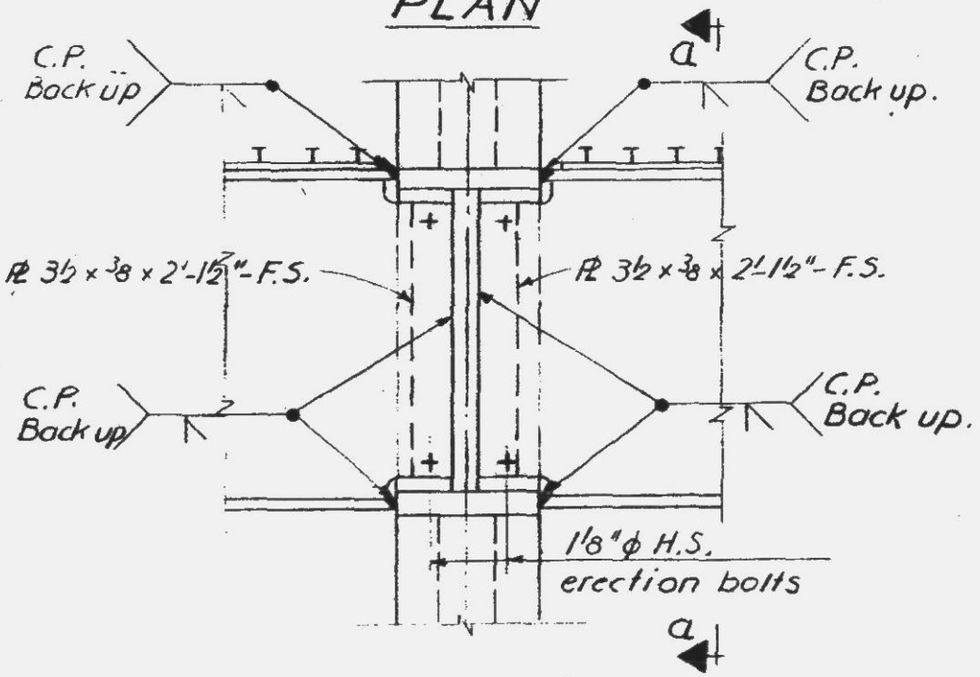

ELEVATION

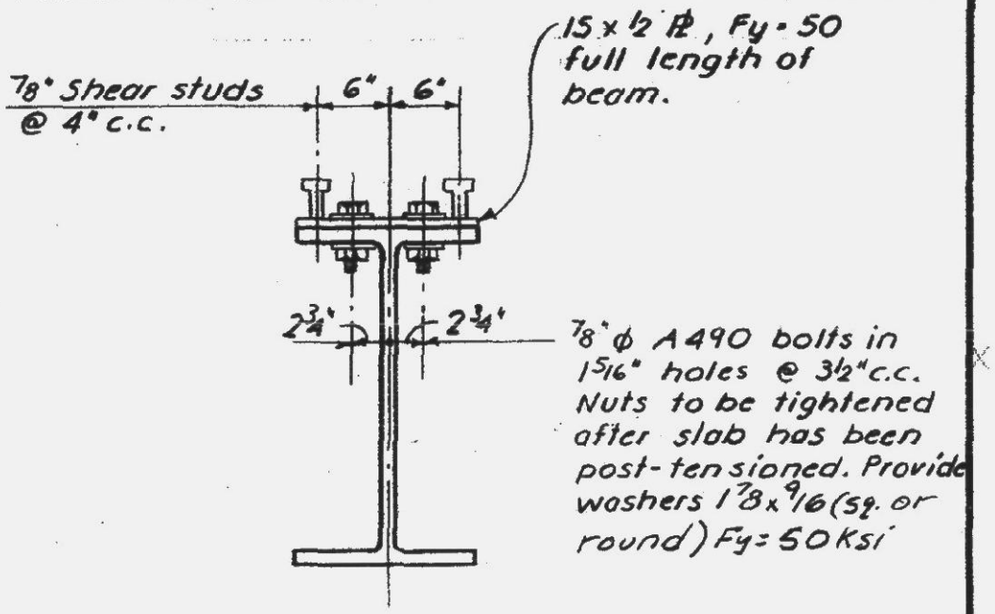

Shear Stud Detail

(Typical all beams this area.)
(see 12-JK2-5)

1'-11"

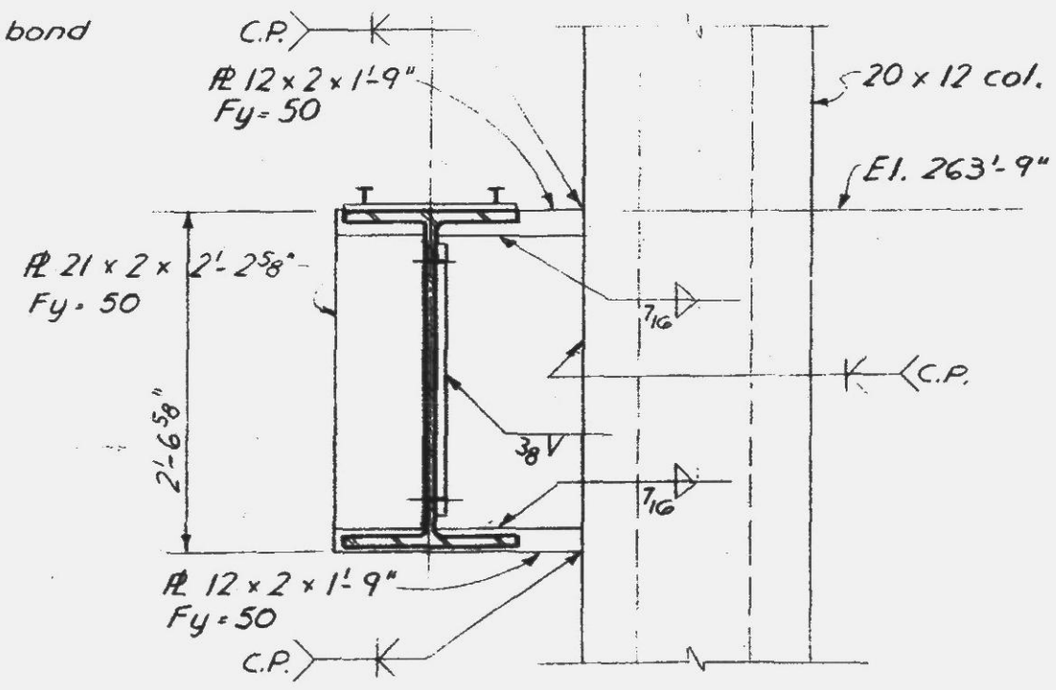

Section a-a

12-JK1-80

LICENSED PROFESSIONAL ENGINEER — LESLIE E. ROBERTSON — No. 34360 — STATE OF NEW YORK

SKILLING - HELLE - CHRISTIANSEN - ROBERTSON Structural & Civil Engineers

PROJECT THE WORLD TRADE CENTER | TITLE BEAM CONNECTION DETAILS | DATE 6-11-68

REVISIONS

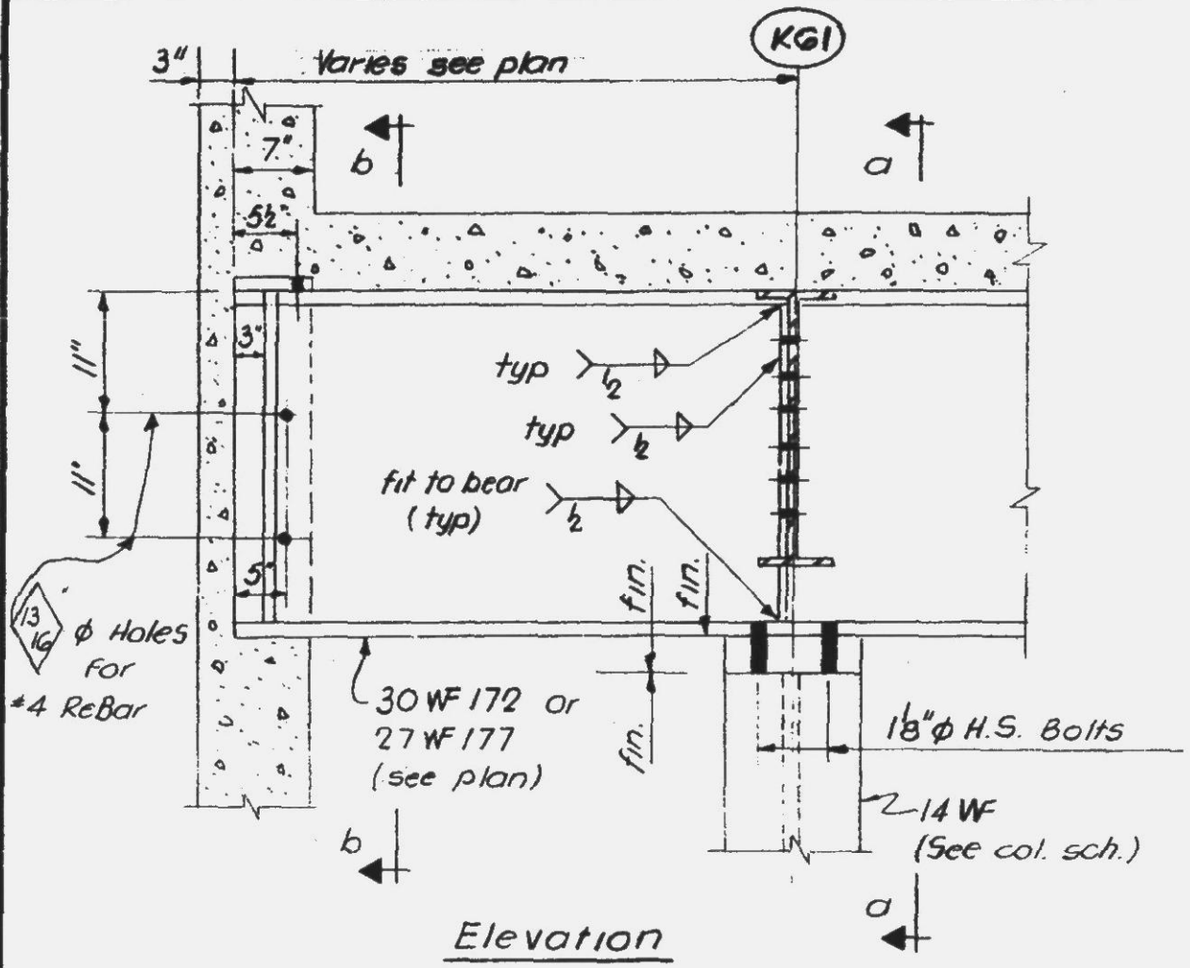

Elevation

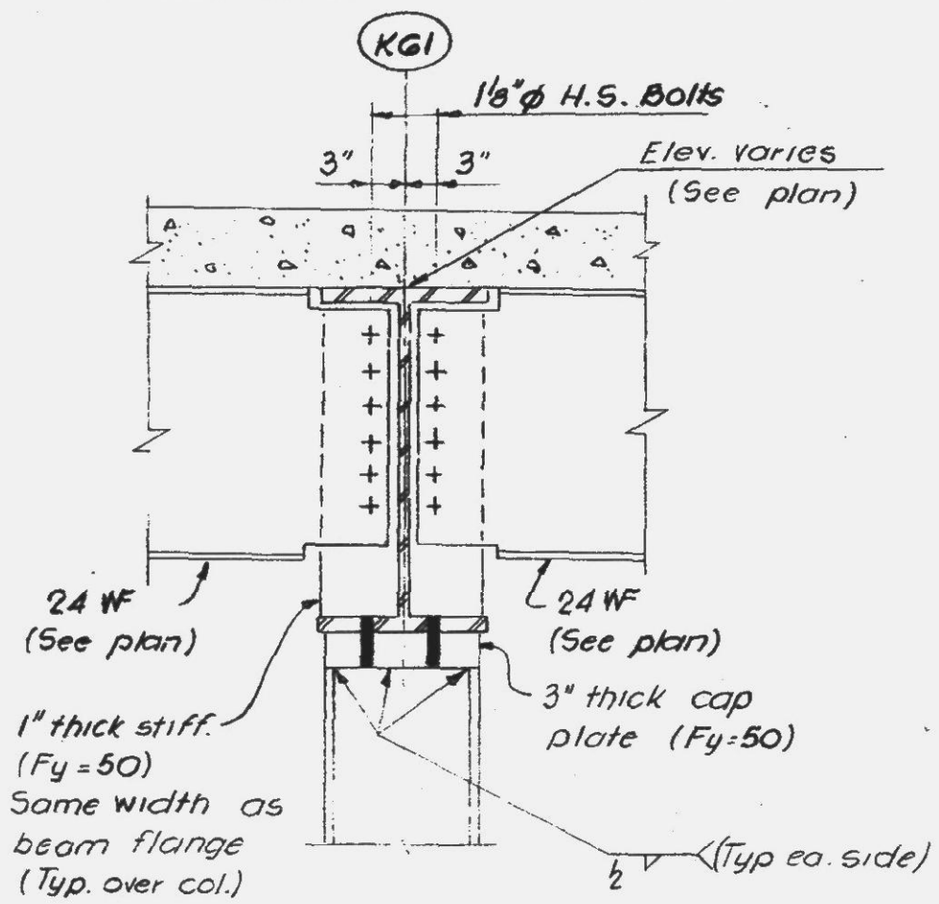

Section a-a

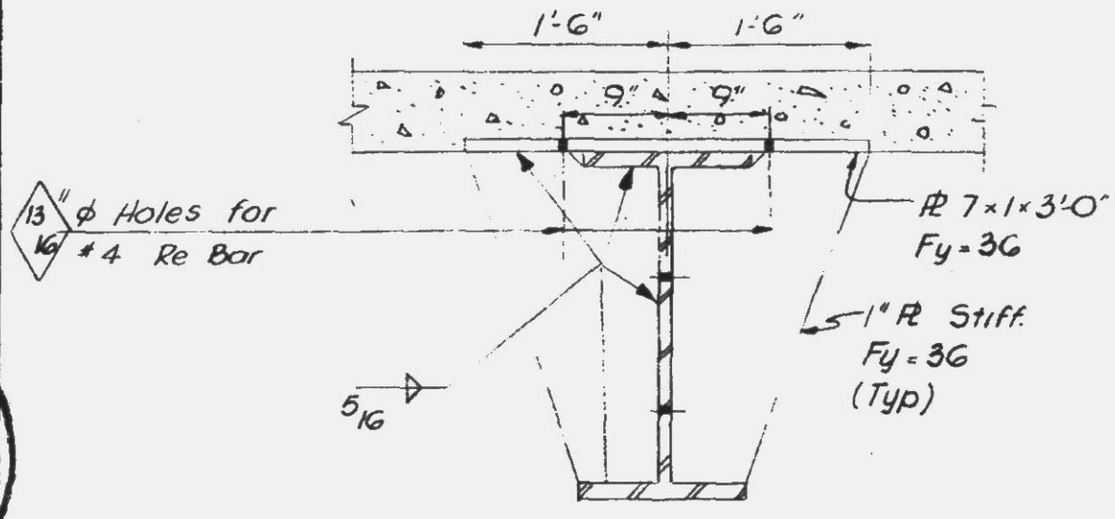

Section b-b

Notes:

1. All welds to be E 70 xx.
2. All bolts to be A325 friction type, unless noted.

LICENSED PROFESSIONAL ENGINEER
LESLIE E. ROBERTSON
No. 34360
UNIVERSITY OF THE STATE OF NEW YORK

12-JK1-81

SKILLING - HELLE - CHRISTIANSEN - ROBERTSON Structural & Civil Engineers

PROJECT THE WORLD TRADE CENTER | TITLE BEAM CONNECTION DETAIL | DATE 6-28-68

REVISIONS

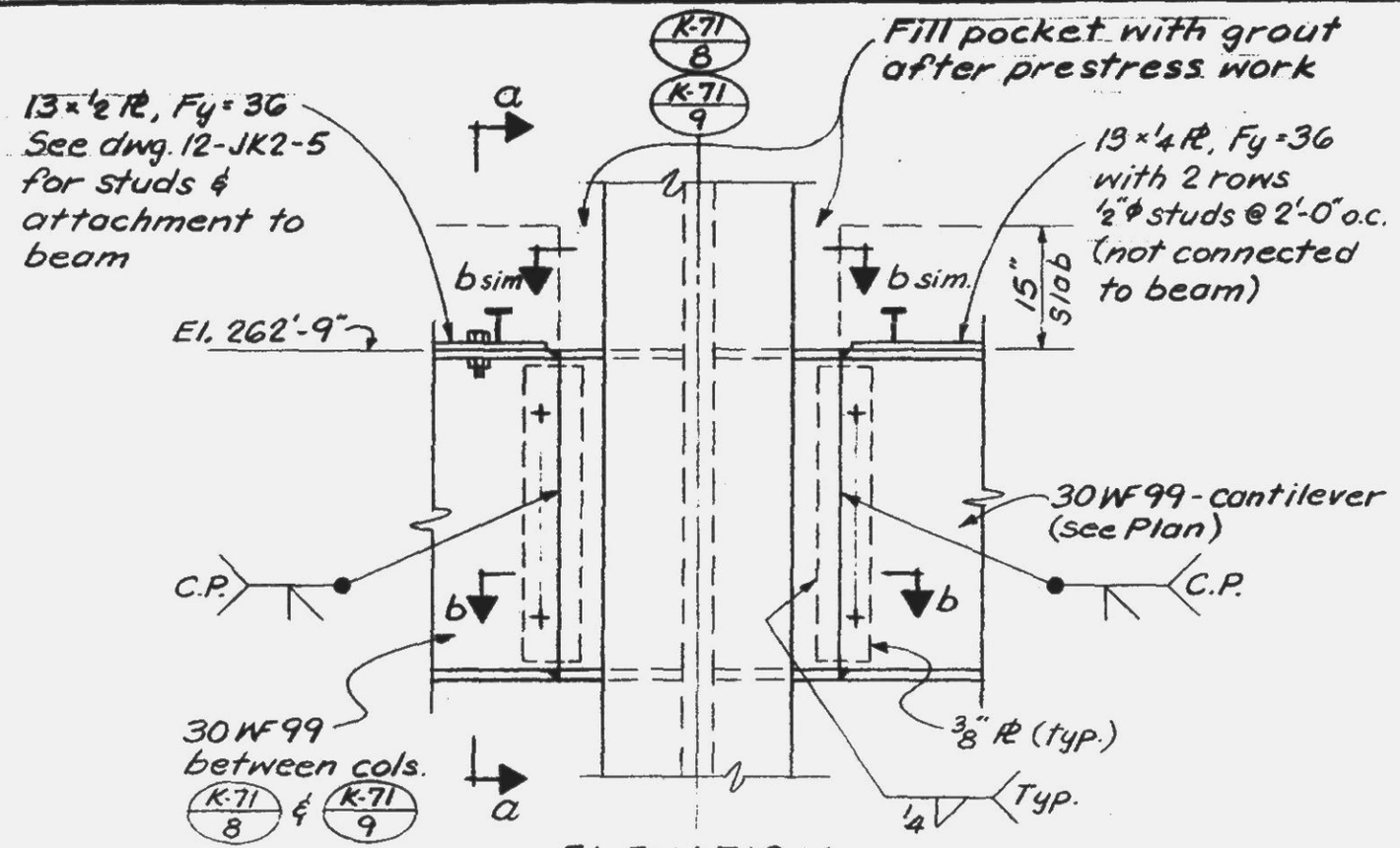

ELEVATION

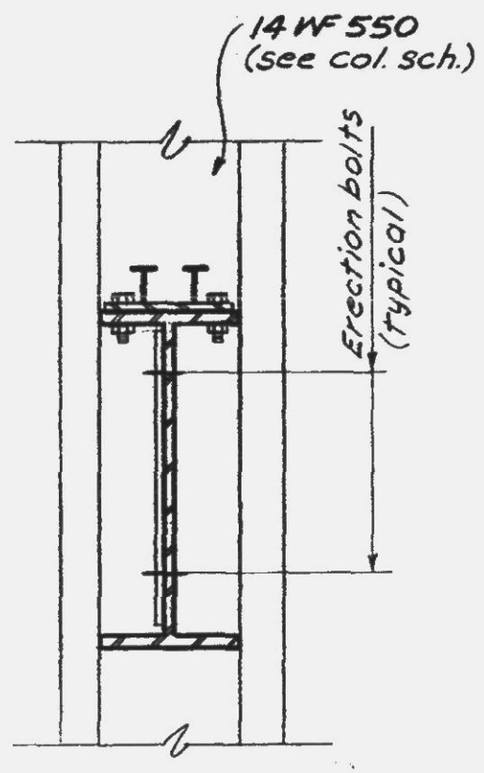

Section a-a

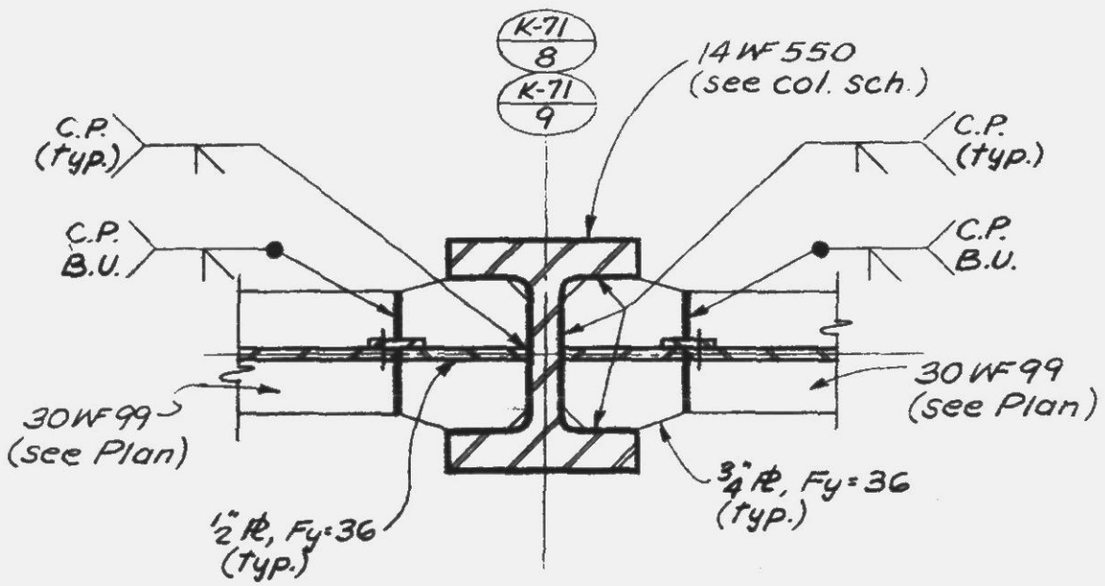

Section b-b

Note:
1. All welds to be E70xx.
2. All bolts to be A325 friction type.

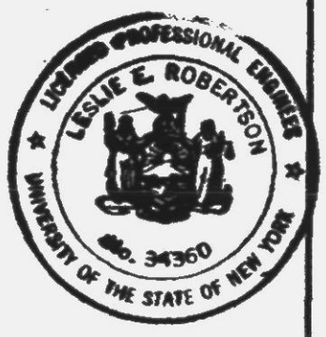

12-JK1-82

SKILLING, HELLE, CHRISTIANSEN, ROBERTSON — Structural & Civil Engineers

PROJECT: THE WORLD TRADE CENTER | TITLE: DETAIL OF HANGER | DATE: 8-15-68

REVISIONS

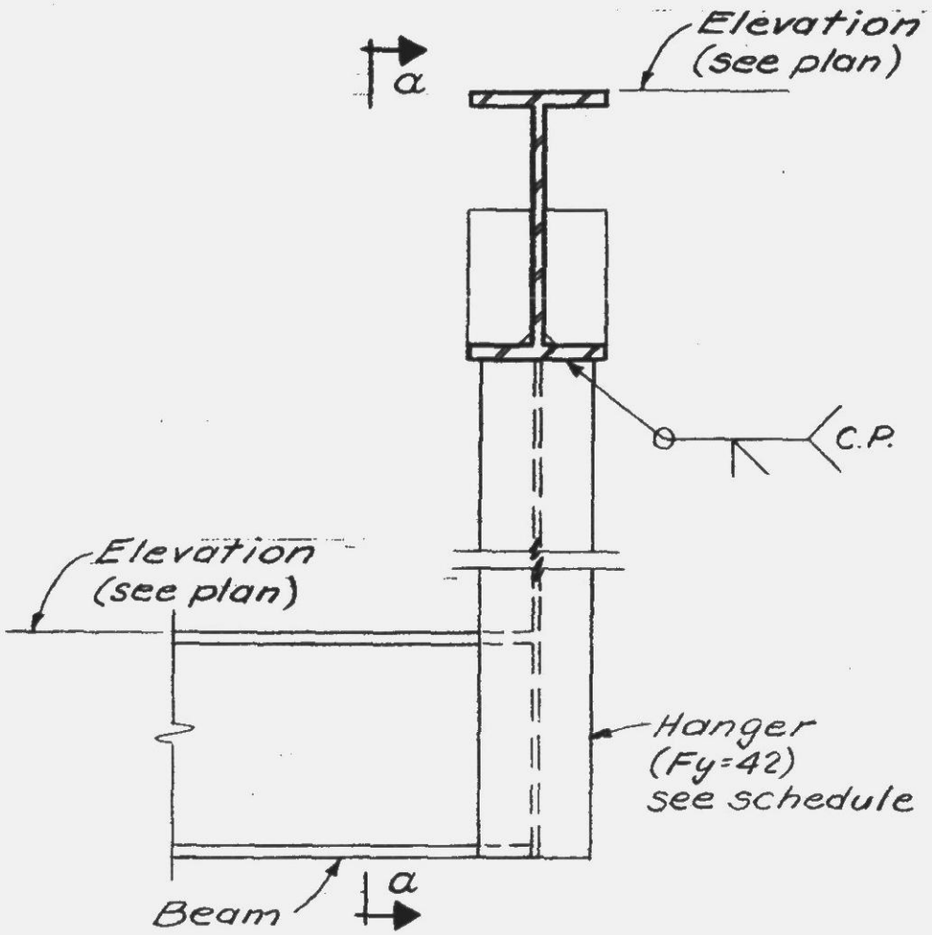

ELEVATION

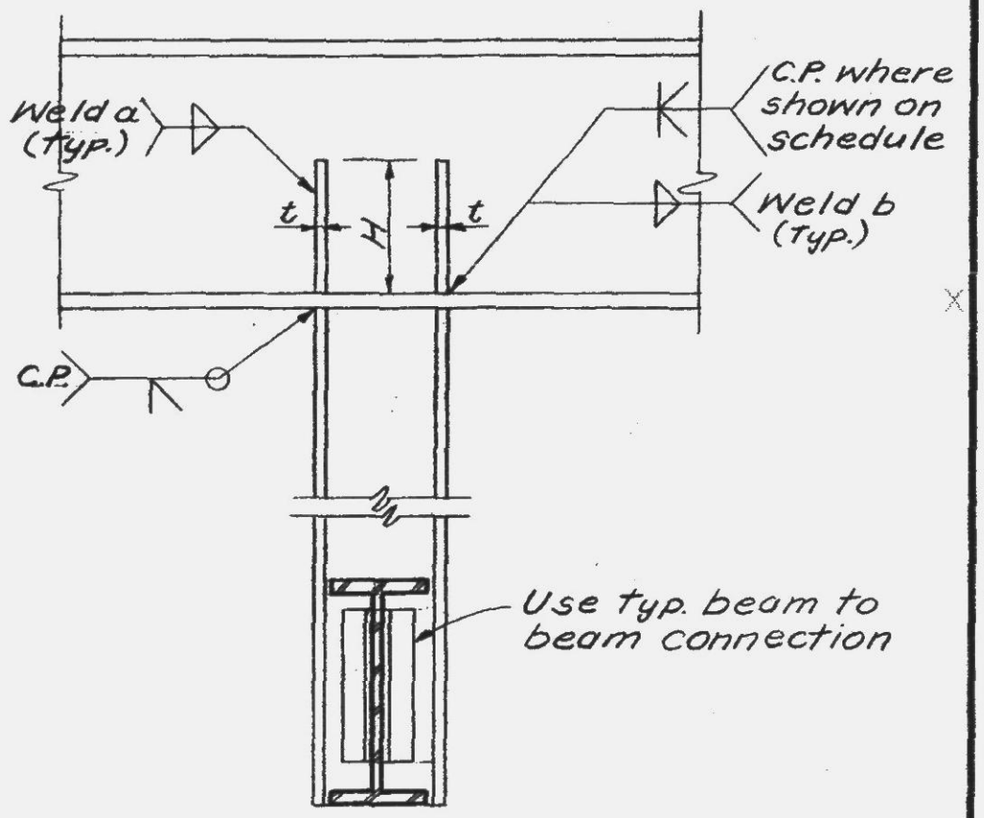

Section a-a

Detail No.	Size of Hanger	Plates t	Plates H	Weld a	Weld b
1	14WF43	1/2	12"	1/4	C.P.

Detail No.	Size of Hanger	Plates t	Plates H	Weld a	Weld b

LESLIE E. ROBERTSON — PROFESSIONAL ENGINEER — No. 34360 — UNIVERSITY OF THE STATE OF NEW YORK

DESIGNED

DRAWN

REVIEWED

12-JK1-83

SKILLING, HELLE, CHRISTIANSEN, ROBERTSON — Structural & Civil Engineers

PROJECT THE WORLD TRADE CENTER | TITLE BEAM CONNECTION DETAILS | DATE 3-21-69

REVISIONS
5-29-69

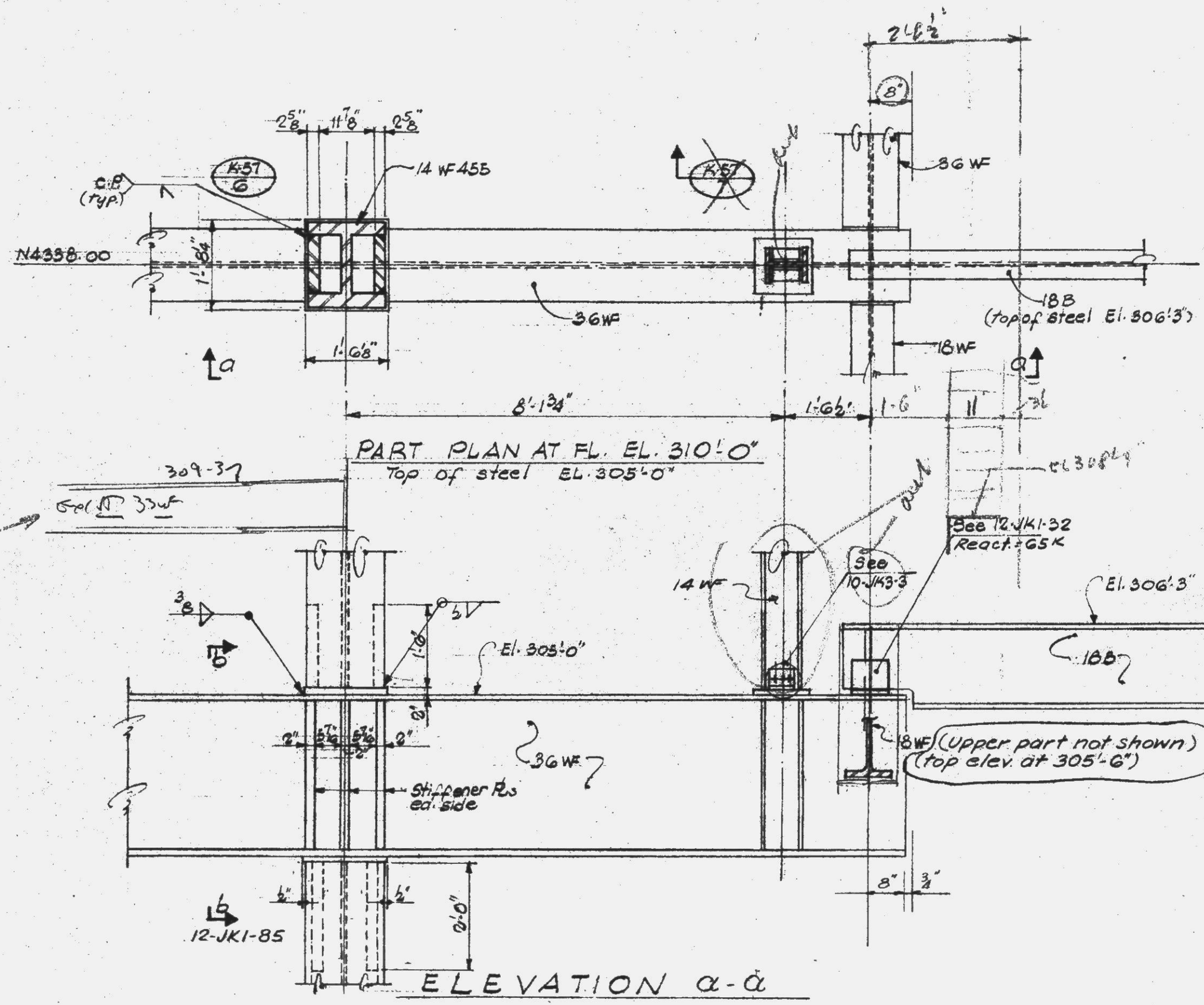

LICENSED PROFESSIONAL ENGINEER
LESLIE E. ROBERTSON
No. 34960
UNIVERSITY OF THE STATE OF NEW YORK

DESIGNED
DRAWN S.T.M.
REVIEWED E.L.

12-JK1-84

SKILLING, HELLE, CHRISTIANSEN, ROBERTSON — Structural & Civil Engineers

PROJECT THE WORLD TRADE CENTER | TITLE BEAM CONNECTION DETAILS | DATE 3-21-69

REVISIONS

5-29-69

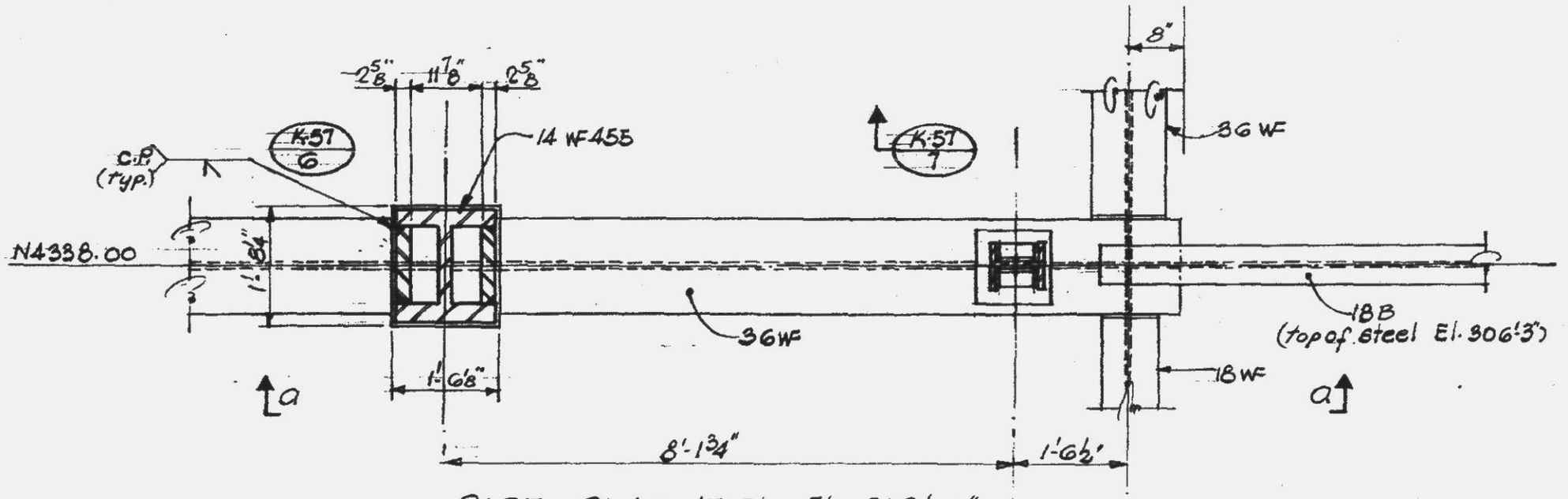

PART PLAN AT FL. EL. 310'-0"
Top of steel EL. 305'-0"

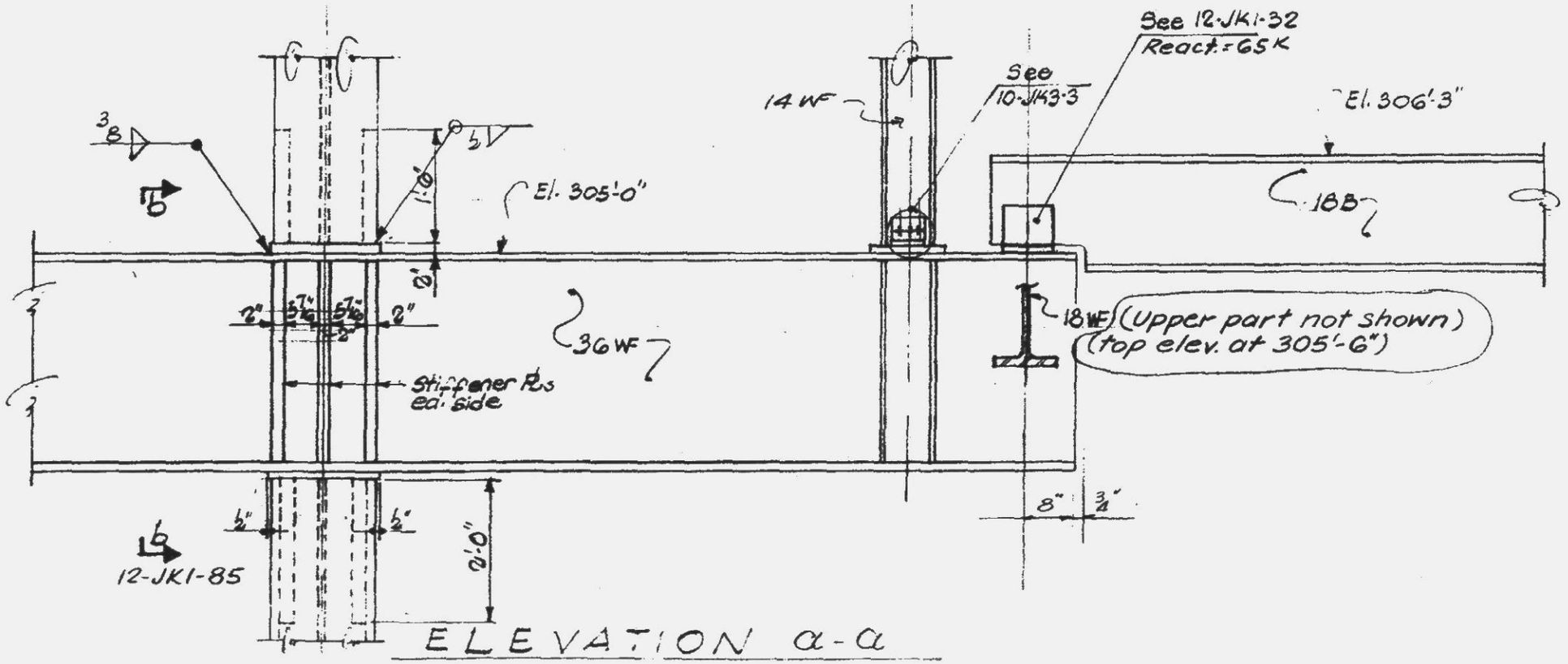

ELEVATION a-a

LICENSED PROFESSIONAL ENGINEER
LESLIE E. ROBERTSON
No. 34360
UNIVERSITY OF THE STATE OF NEW YORK

DESIGNED

DRAWN
S.T.M.

REVIEWED
E.L.

12-JK1-84

SKILLING, HELLE, CHRISTIANSEN, ROBERTSON — Structural & Civil Engineers

PROJECT: THE WORLD TRADE CENTER | TITLE: BEAM CONNECTION DETAILS | DATE: 3-21-69

REVISIONS

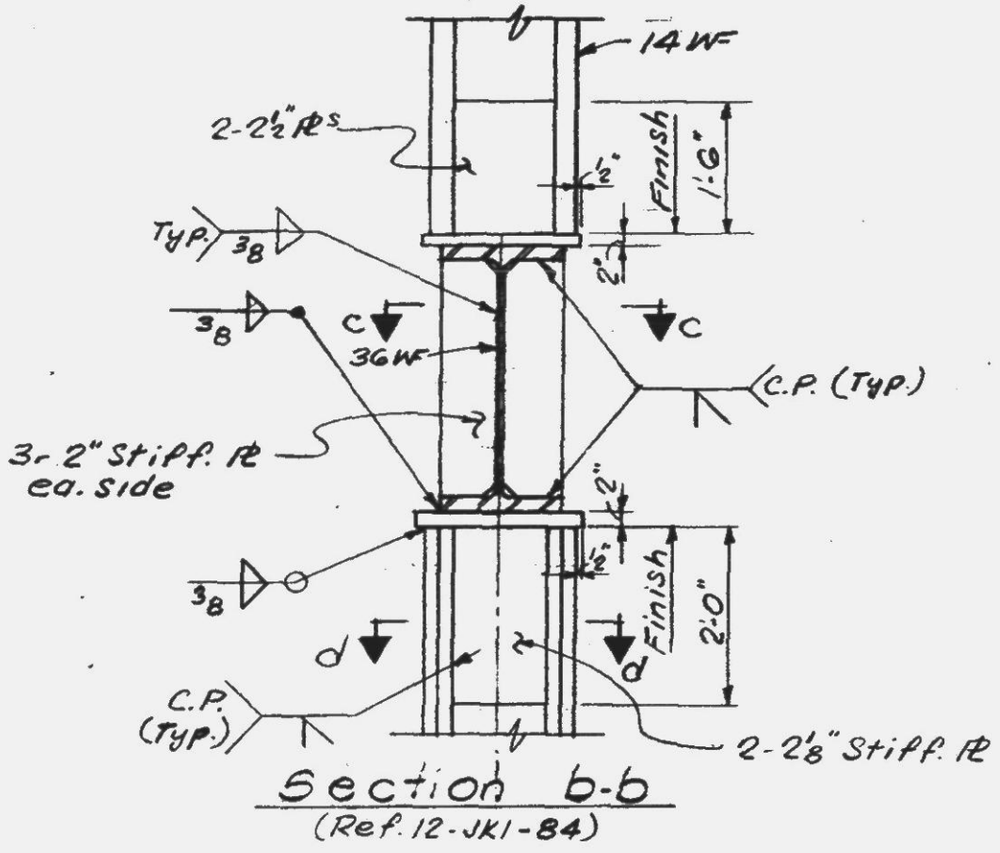

Section b-b
(Ref. 12-JK1-84)

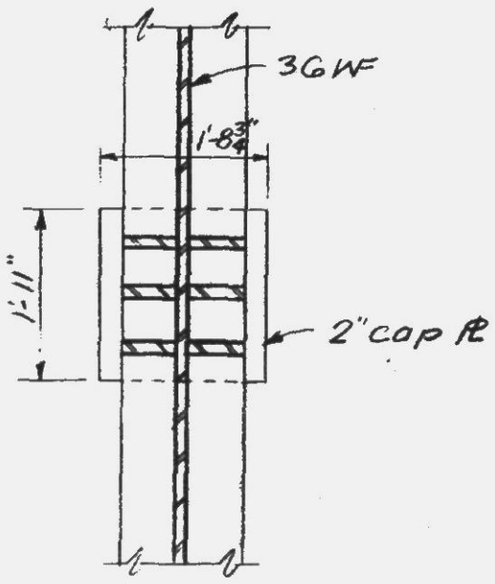

Section c-c

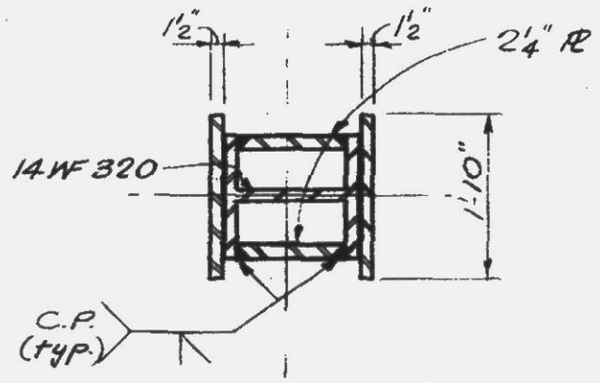

Section d-d

LICENSED PROFESSIONAL ENGINEER — LESLIE E. ROBERTSON — No. 34360 — UNIVERSITY OF THE STATE OF NEW YORK

DESIGNED

DRAWN S.T.M.

REVIEWED E.L.

12-JK1-85

SKILLING, HELLE, CHRISTIANSEN, ROBERTSON — Structural & Civil Engineers

PROJECT: THE WORLD TRADE CENTER | TITLE: REFRIG. RM. CONN. DETAILS ADJ. TO 24" MECH. BASE | DATE: 10-15-68

REVISIONS

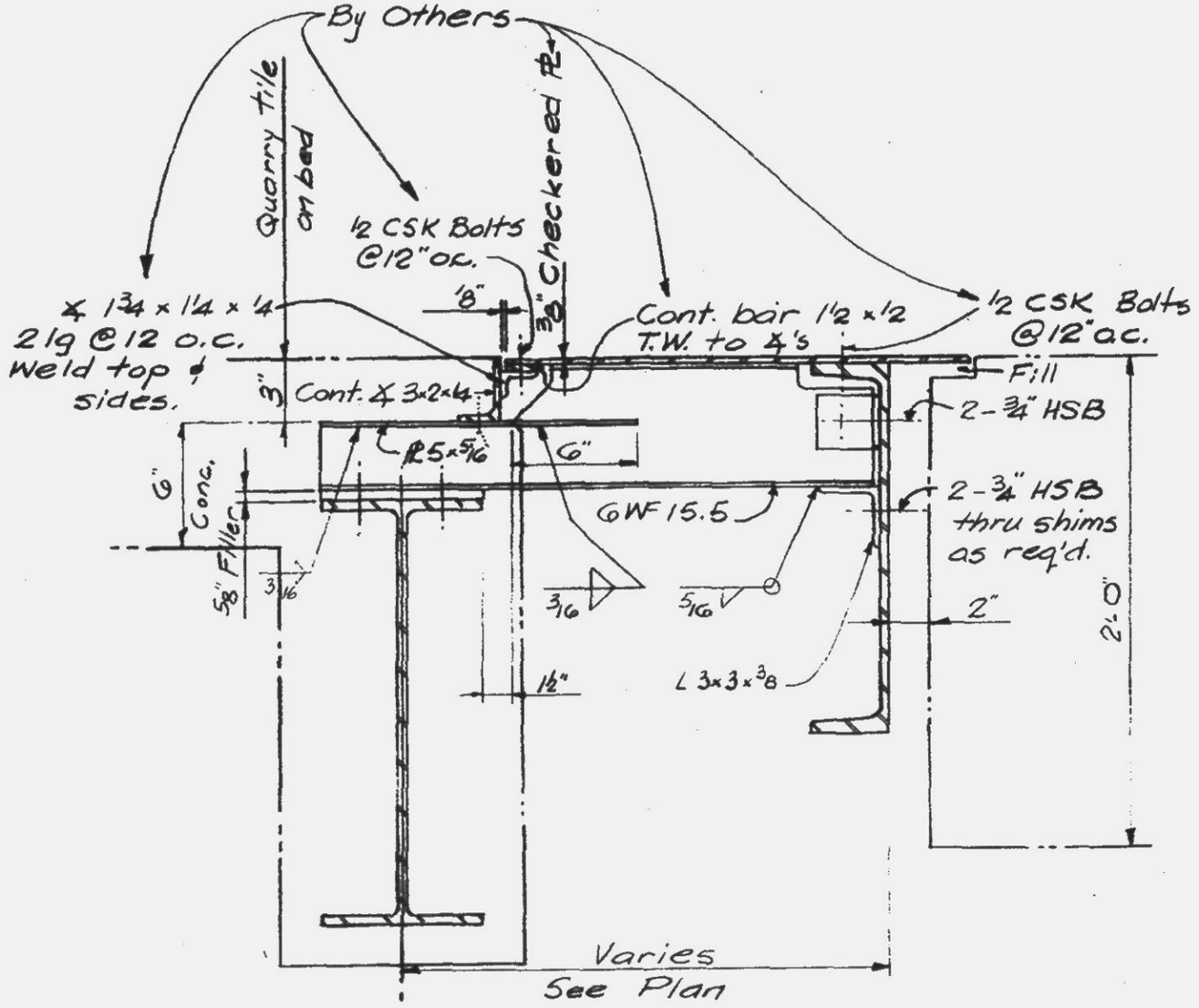

Work by others shown schematically only.
For full details refer to Archt's and Mech. Engr's dwgs.

LICENSED PROFESSIONAL ENGINEER
LESLIE E. ROBERTSON
No. 34360
UNIVERSITY OF THE STATE OF NEW YORK

DESIGNED

DRAWN

REVIEWED

12-JK1-99

SKILLING, HELLE, CHRISTIANSEN, ROBERTSON — Structural & Civil Engineers

PROJECT: THE WORLD TRADE CENTER | TITLE: REFRIG. RM. CONN. DETAILS ADJ. TO 24" MECH. BASE | DATE: 10-15-68

REVISIONS

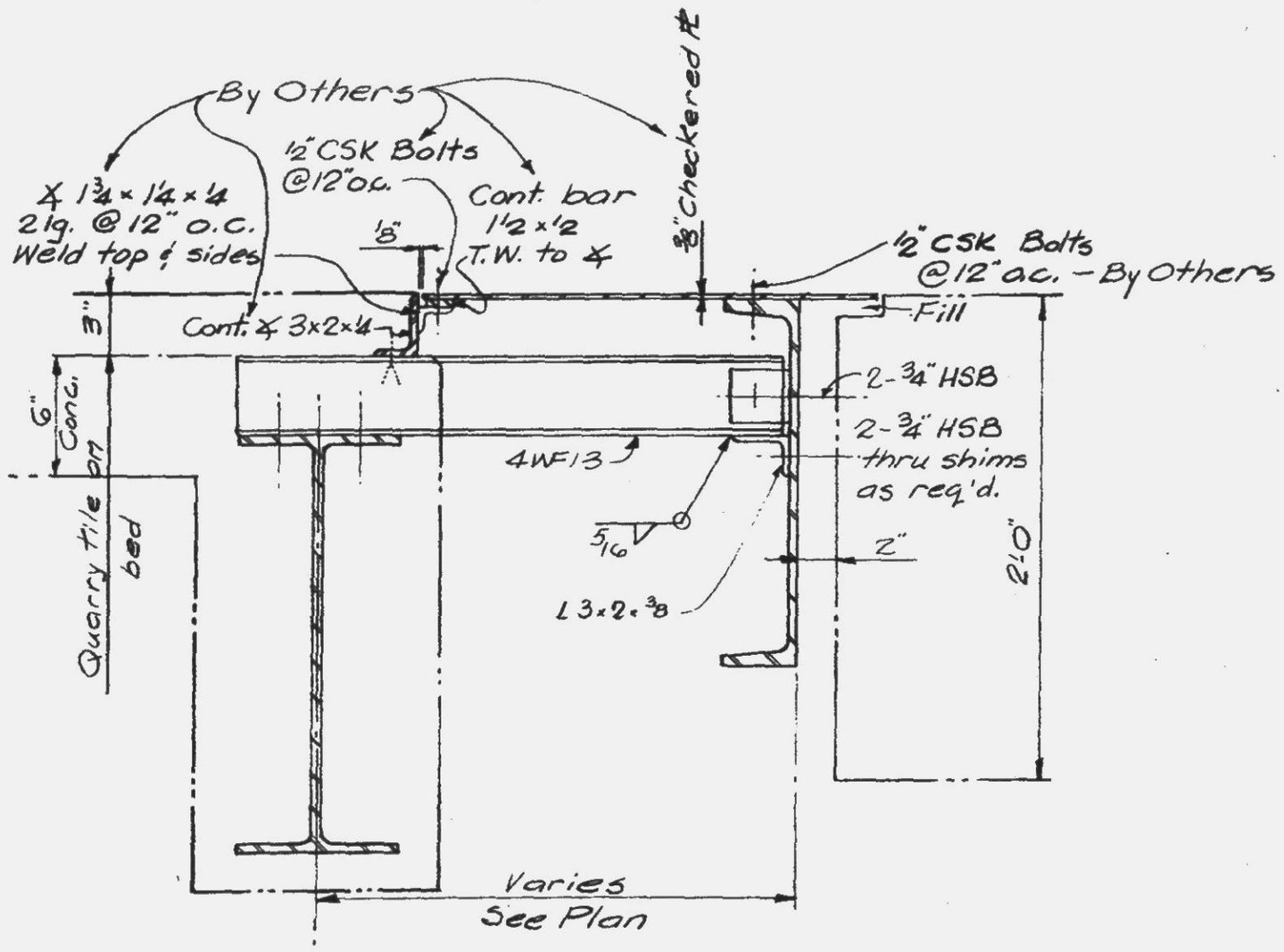

Work by others shown schematically only.
For full details refer to Archt's and Mech. Engr's dwgs.

LICENSED PROFESSIONAL ENGINEER — LESLIE E. ROBERTSON — No. 34360 — UNIVERSITY OF THE STATE OF NEW YORK

DESIGNED

DRAWN

REVIEWED

12-JK1-99A

SKILLING - HELLE - CHRISTIANSEN - ROBERTSON Structural & Civil Engineers

PROJECT THE WORLD TRADE CENTER | TITLE BEAM CONNECTION DETAIL TO N. OF TOWER 'A' - A101 → A108 | DATE 11-24-67

REVISIONS
1-5-68
5-1-68

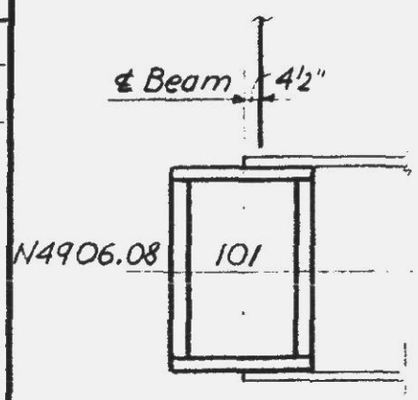

A-101

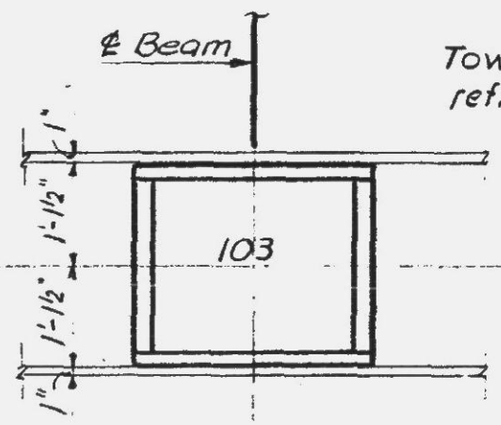

A-102

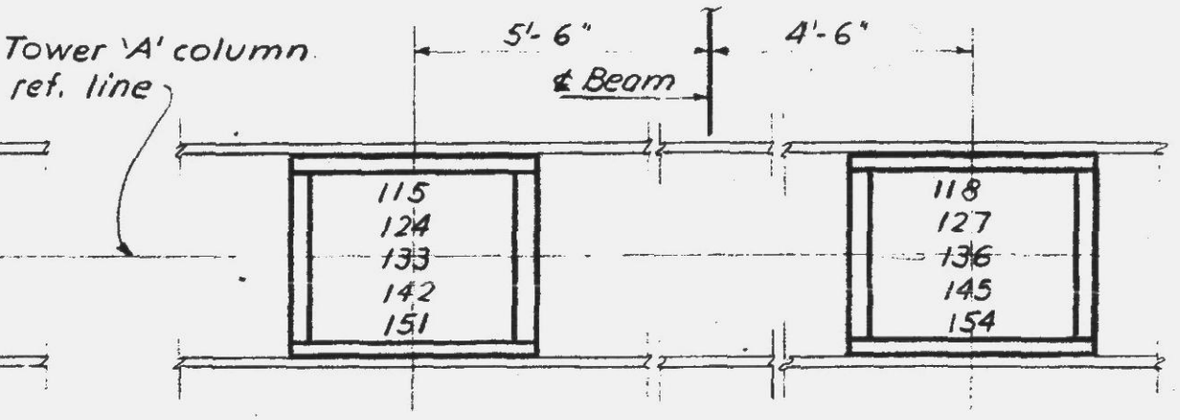

A-103 & A-104

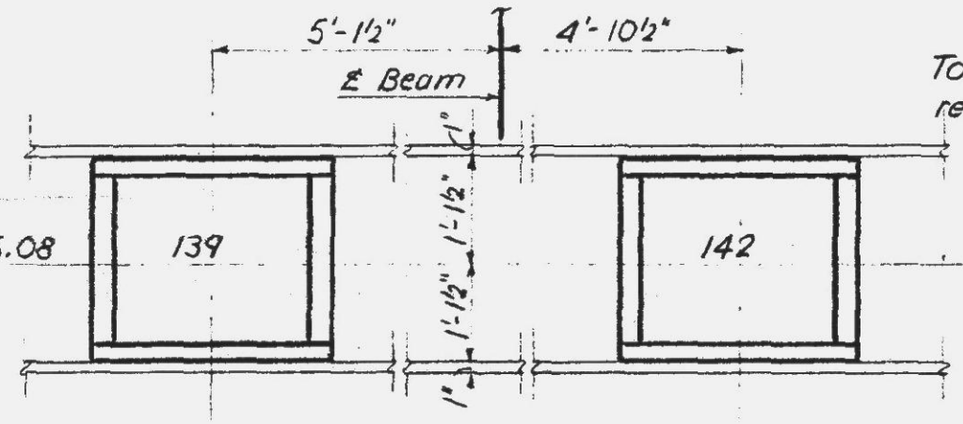

A-105

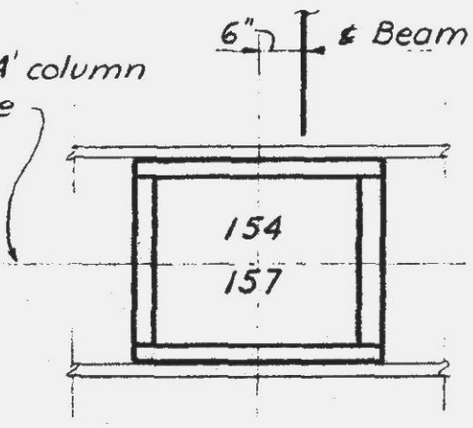

A-106

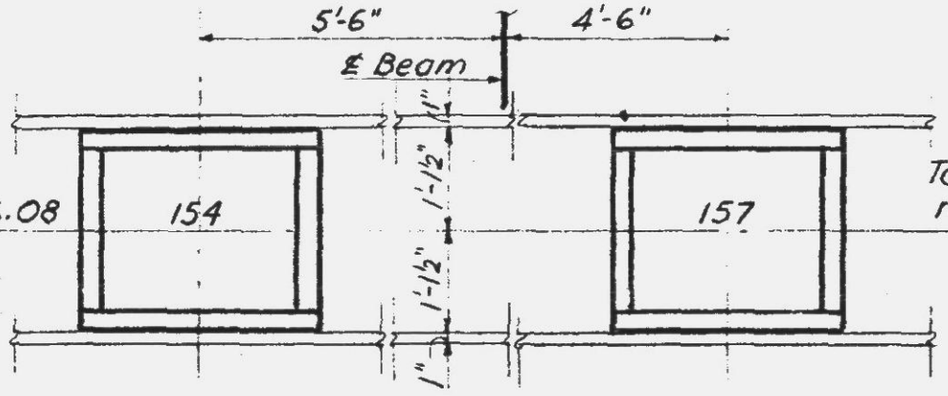

A-107

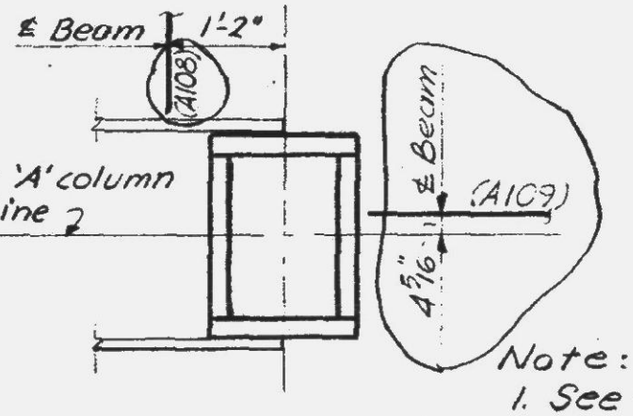

A-108

A-109

N

Note:
1. See schedule on 12-JK1-107

12-JK1-101

LICENSED PROFESSIONAL ENGINEER
LESLIE E. ROBERTSON
NO. 34560
OF THE STATE OF NEW YORK

90

SKILLING - HELLE - CHRISTIANSEN - ROBERTSON — Structural & Civil Engineers

PROJECT THE WORLD TRADE CENTER | TITLE BEAM CONNECTION DETAIL TO E OF TOWER 'A' A-201-A205 | DATE 5-1-68

REVISIONS

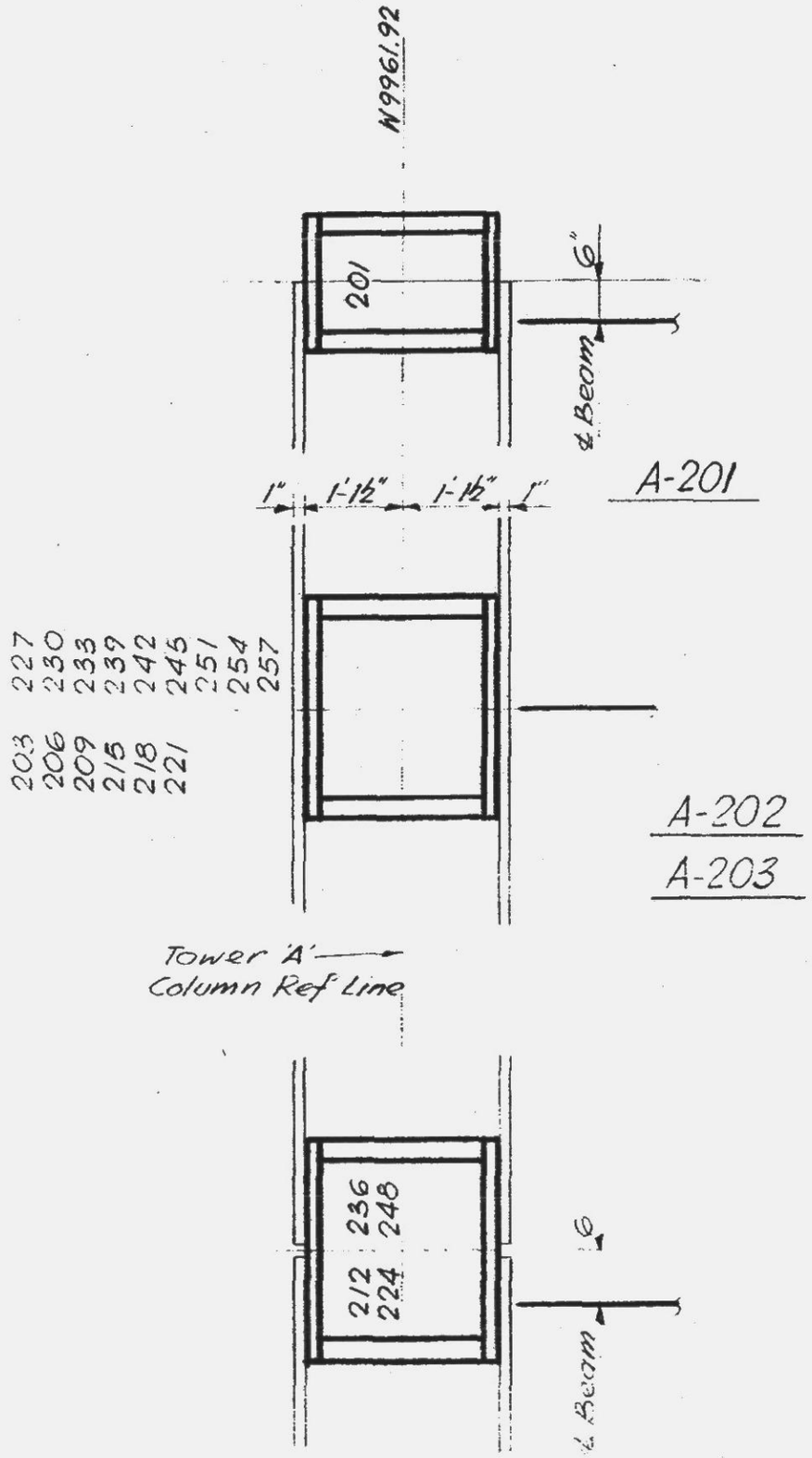

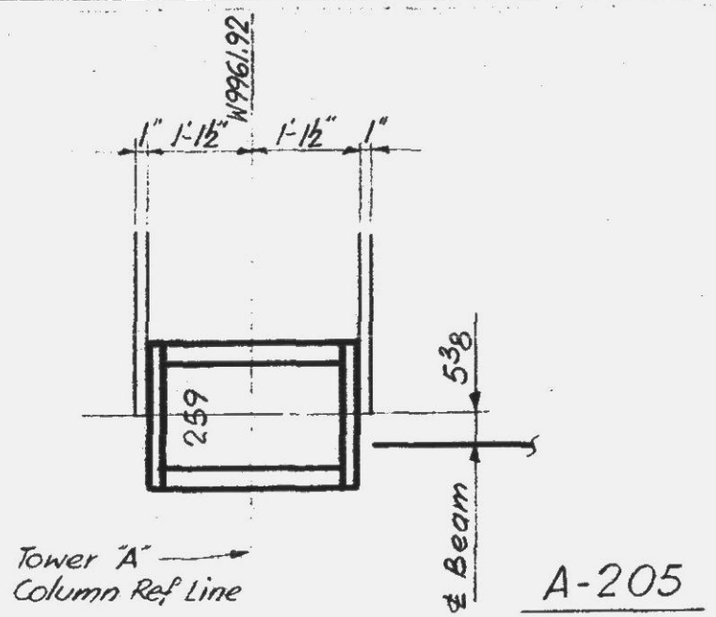

Note:
See Schedule on 12-JK-107

12-JK-102

LICENSED PROFESSIONAL ENGINEER
LESLIE E. ROBERTSON
No. 34360
UNIVERSITY OF THE STATE OF NEW YORK

SKILLING - HELLE - CHRISTIANSEN - ROBERTSON — Structural Engineers

PROJECT THE WORLD TRADE CENTER | TITLE BEAM CONNECTION DETAIL TO S. OF TOWER A" A301 THRU A310 | DATE 11-24-67

REVISIONS

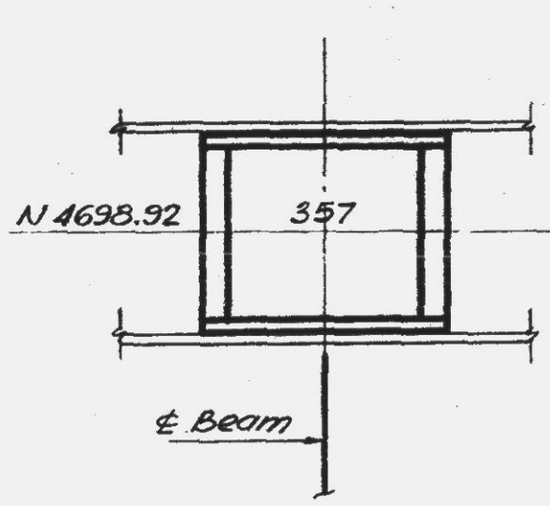

A-308

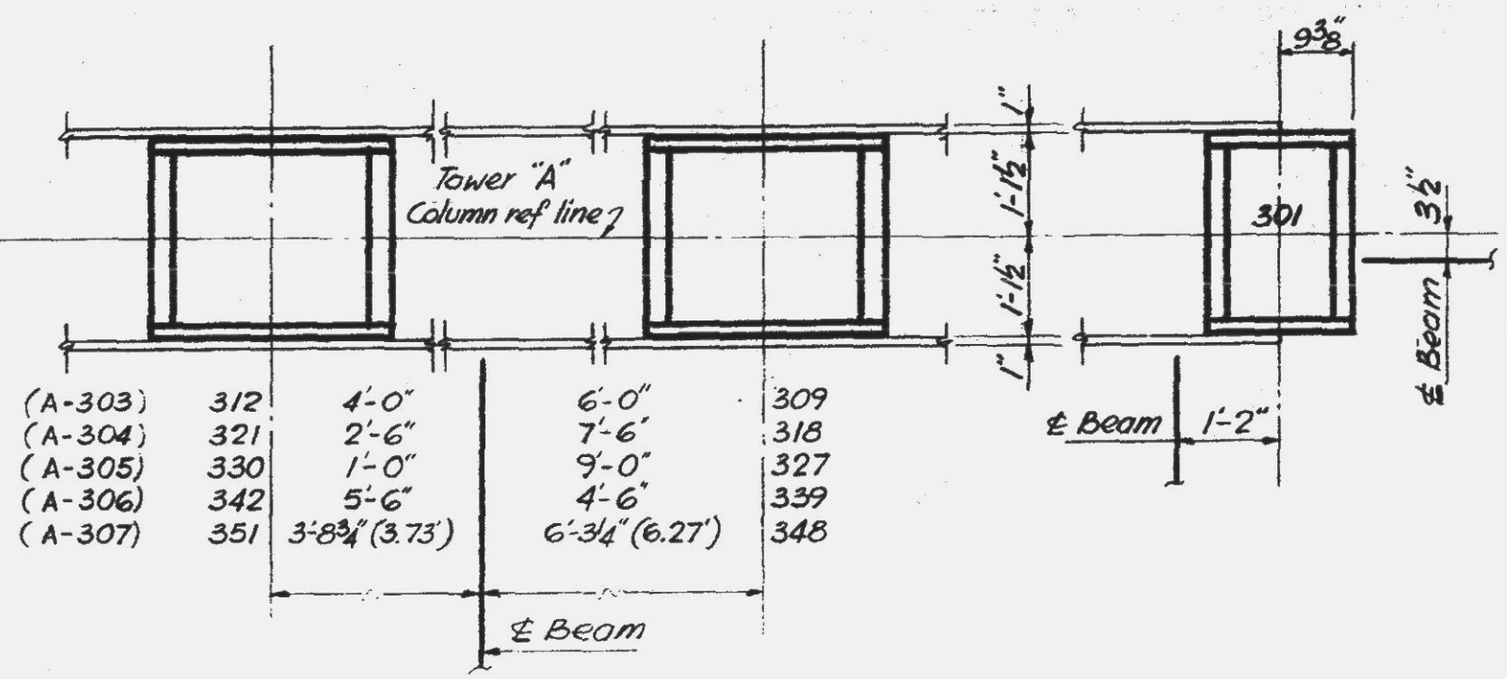

A-303 Thru A-307

A-301 & A-302

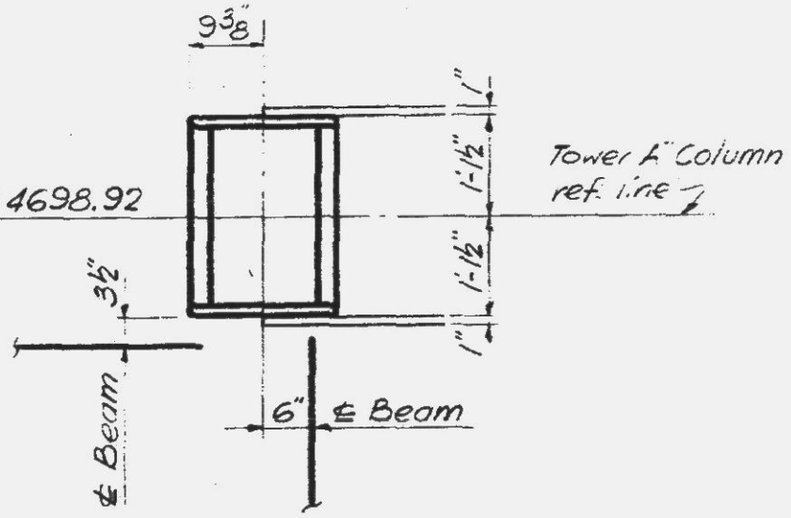

A-309 & A-310

Note:
1. See Schedule on 12-JK1-108

N

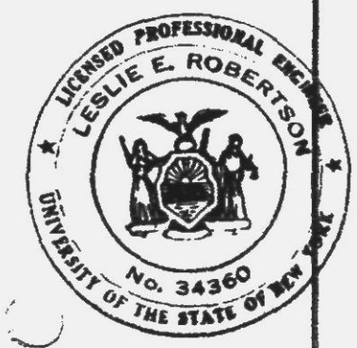

12-JK1-103

SKILLING – HELLE – CHRISTIANSEN – ROBERTSON — Structural & Civil Engineers

PROJECT THE WORLD TRADE CENTER | TITLE BEAM CONNECTION DETAIL TO W. OF TOWER "A" - A401 THRU A408 | DATE 11-24-67

REVISIONS
1-5-68

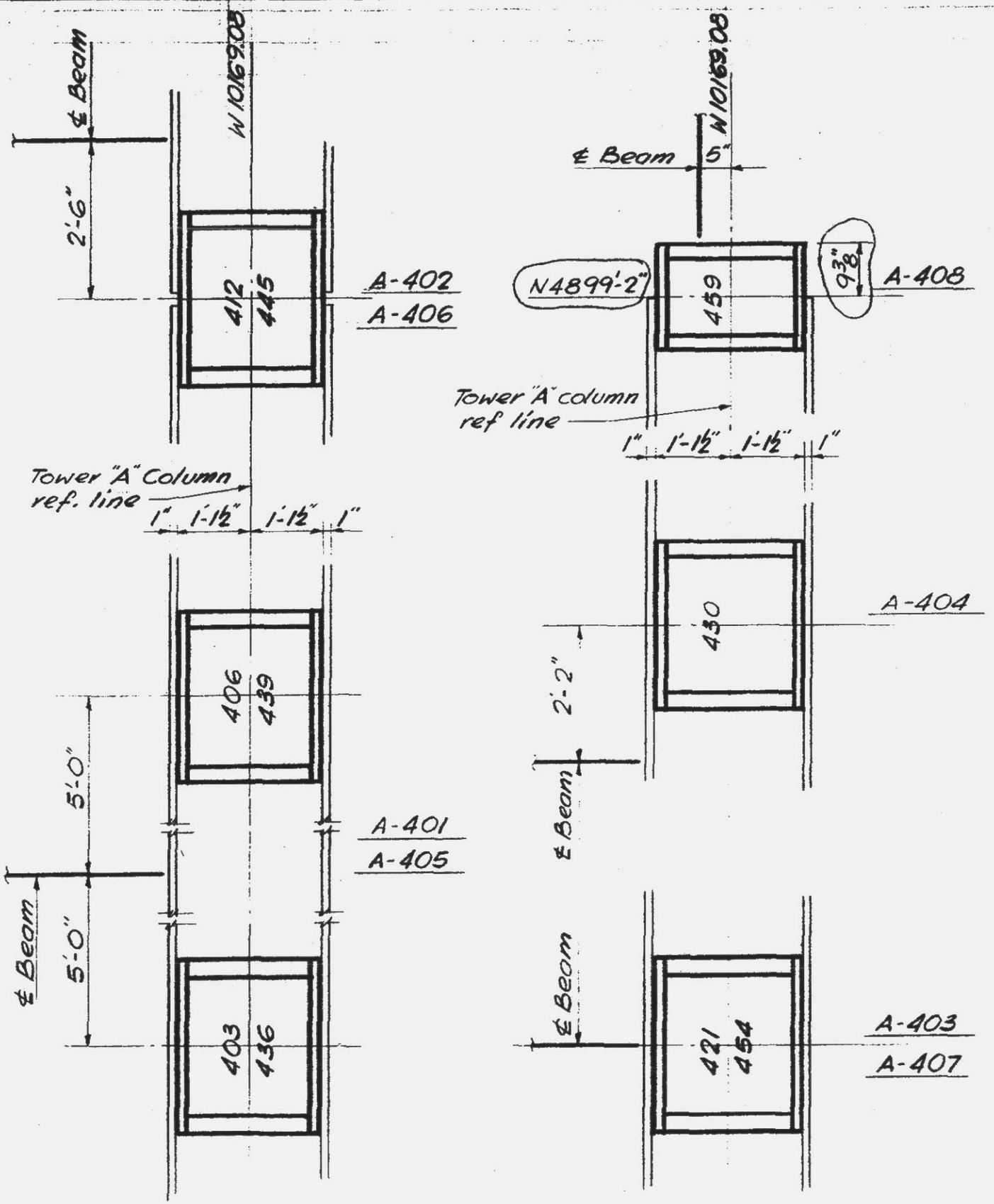

Note:
1. See Schedule on 12-JK1-108

LICENSED PROFESSIONAL ENGINEER
LESLIE E. ROBERTSON
No. 34360
UNIVERSITY OF THE STATE OF NEW YORK

12-JK1-104

SKILLING - HELLE - CHRISTIANSEN - ROBERTSON — Structural & Civil Engineers

PROJECT

TITLE: BEAM CONNECTION DETAIL TO TOWER TYPE A & A1

DATE: 5-1-68

REVISIONS

12-3-68

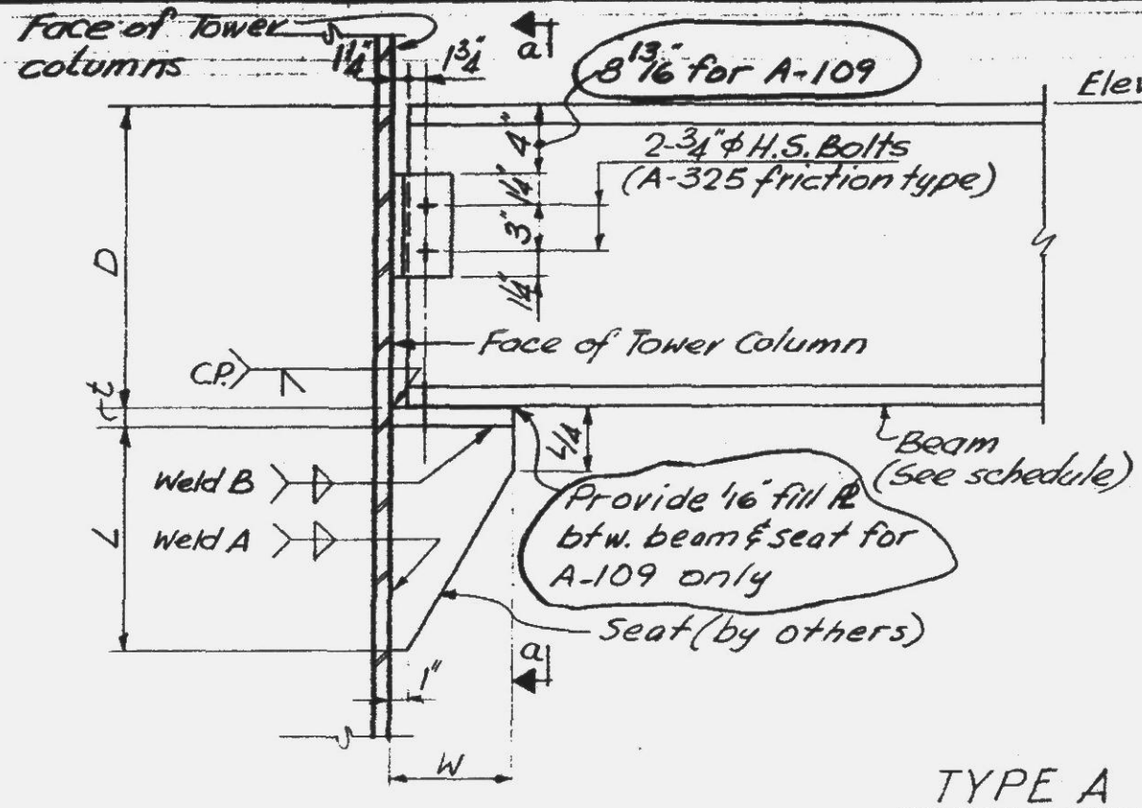

Elevation

TYPE A

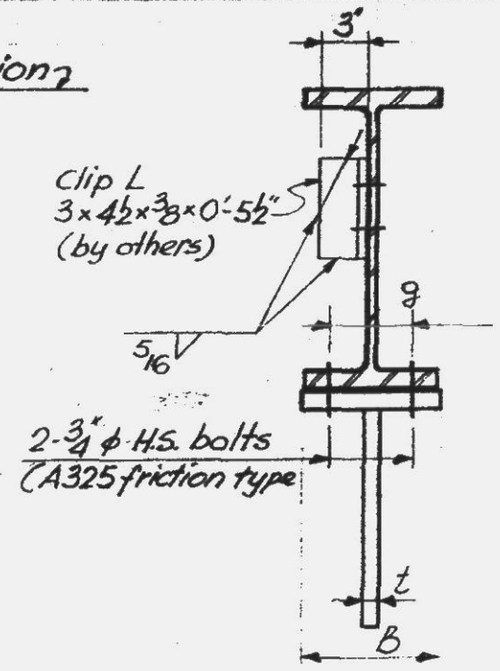

Section a-a

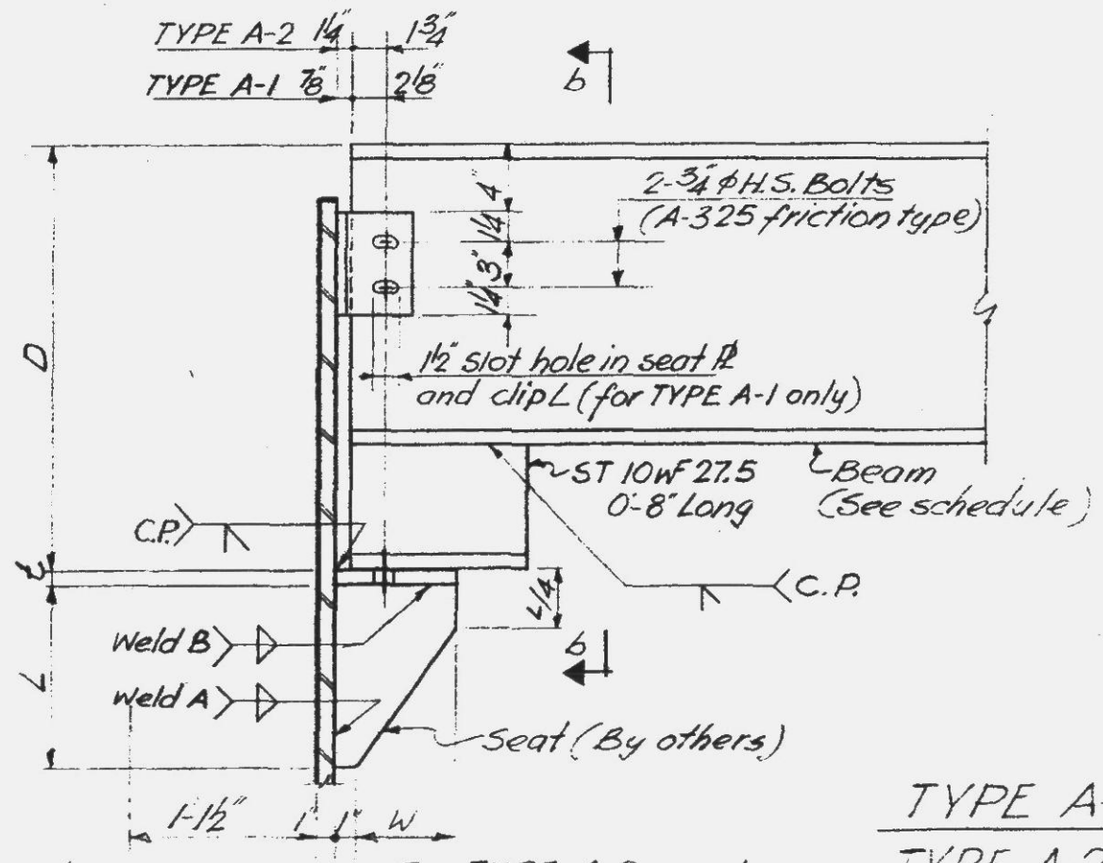

TYPE A-1

TYPE A-2 (No slot holes)

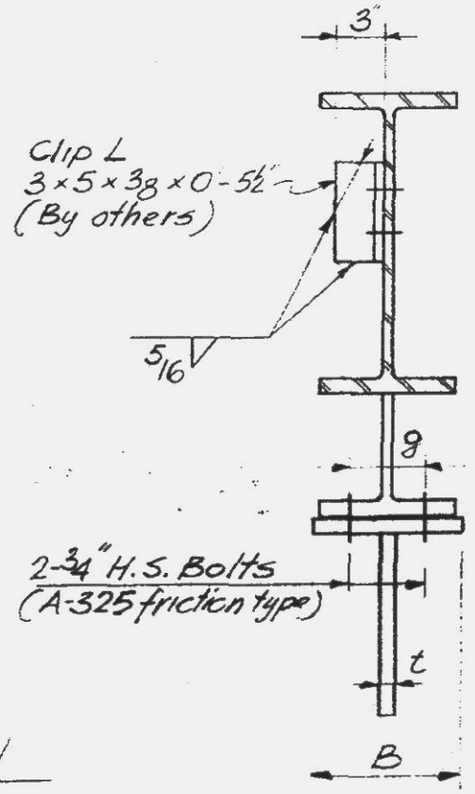

Section b-b

Note:
1. Provide 1¾" x 7/16 washers (Fy=50 PSI) sq. or round where slot holes occurs.
2. See Schedule 12-JK1-107 & 108 for locations

12-JK1-105

LICENSED PROFESSIONAL ENGINEER — LESLIE E. ROBERTSON — No. 34260 — UNIVERSITY OF THE STATE OF NEW YORK

SKILLING - HELLE - [illegible] - ROBERTSON Structural & Civil Engineers

PROJECT THE WORLD TRADE CENTER | TITLE BEAM CONNECTION DETAIL TO TOWER - TYPE B & C | DATE 11-24-67

REVISIONS

1-5-68

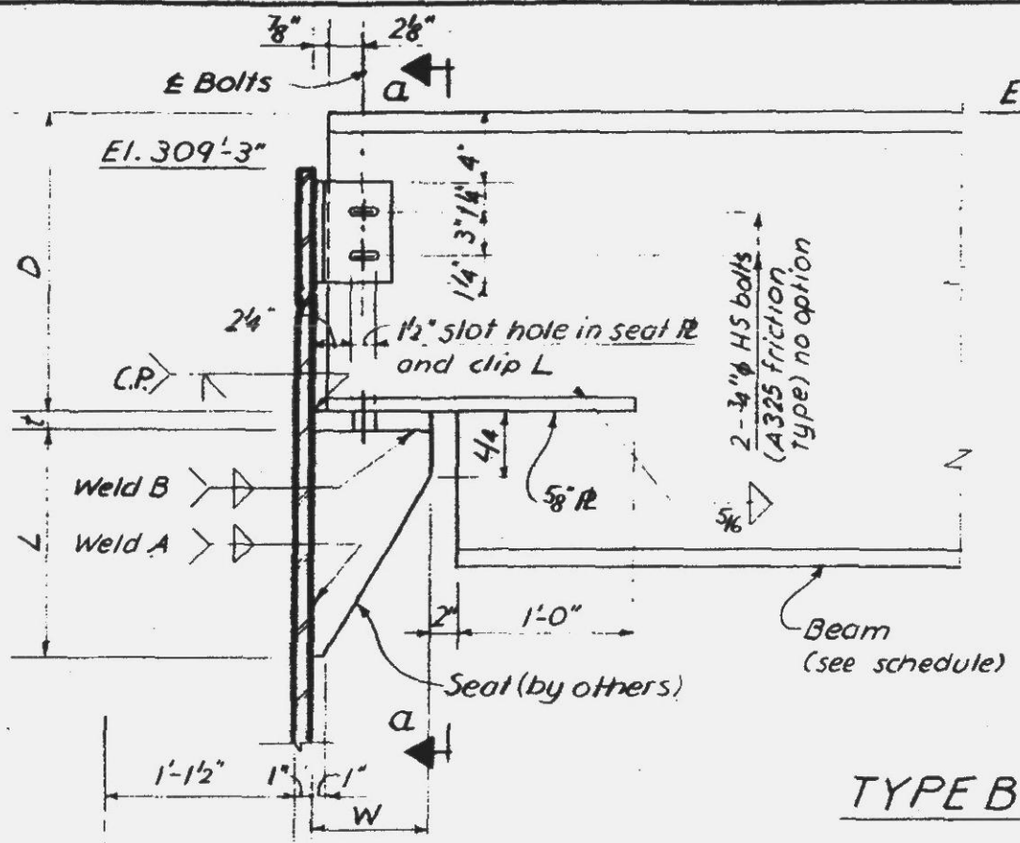

TYPE B

Elevation 2

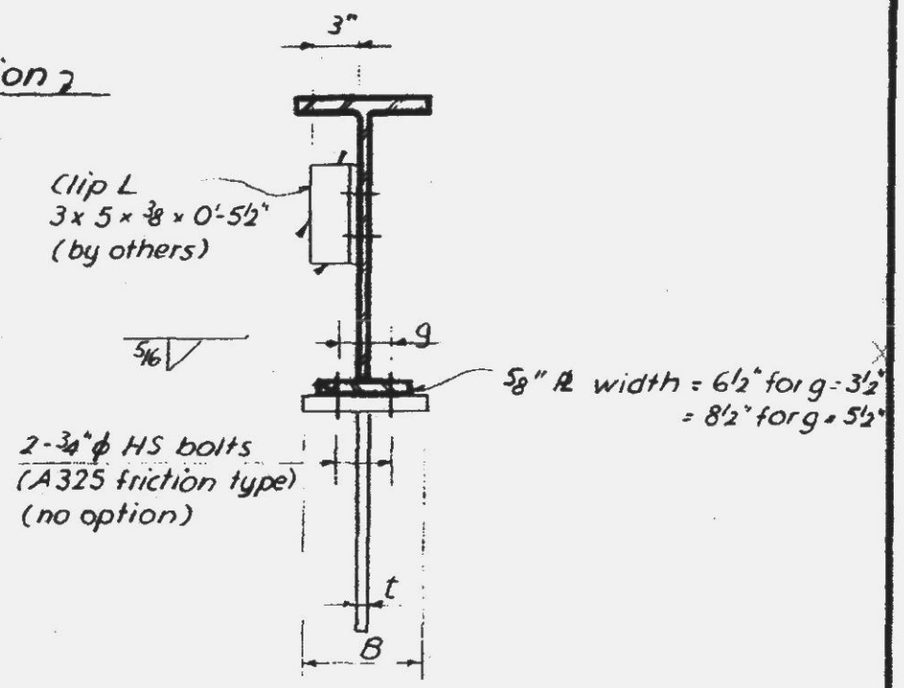

Section a-a

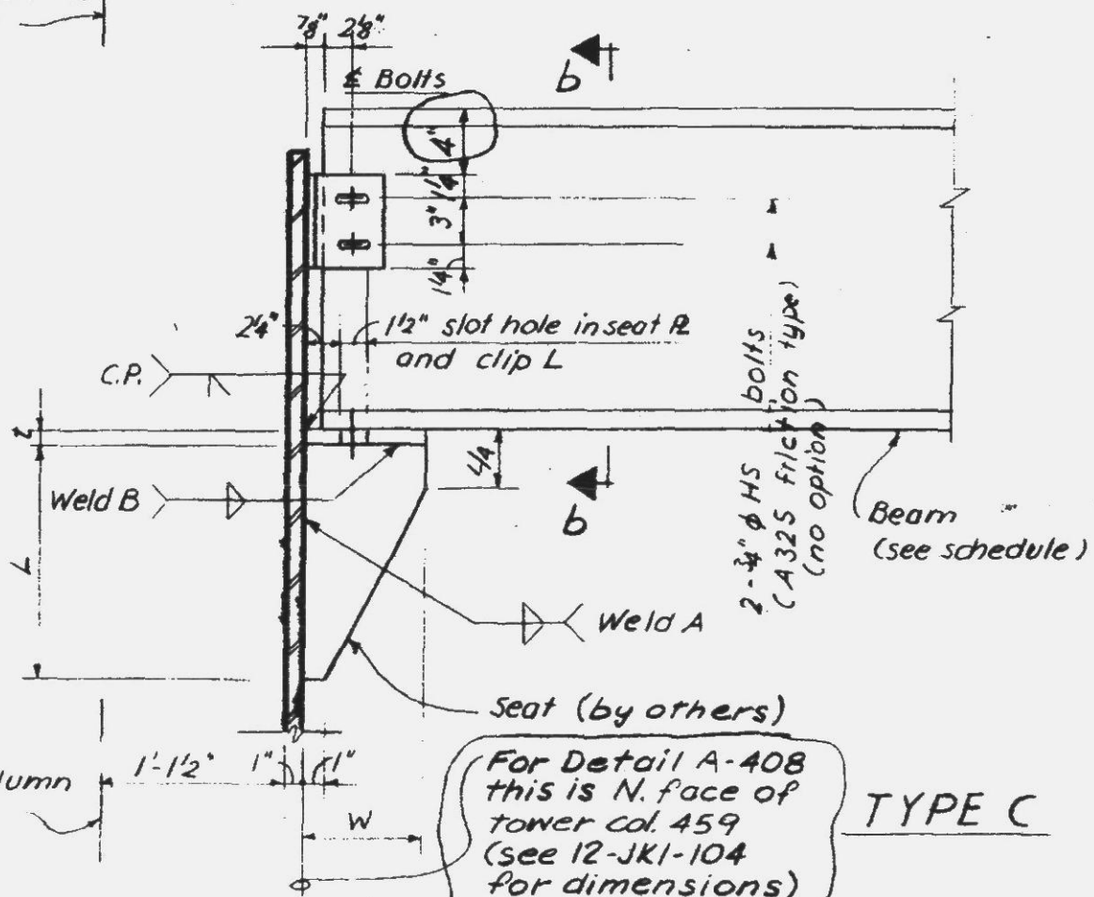

TYPE C

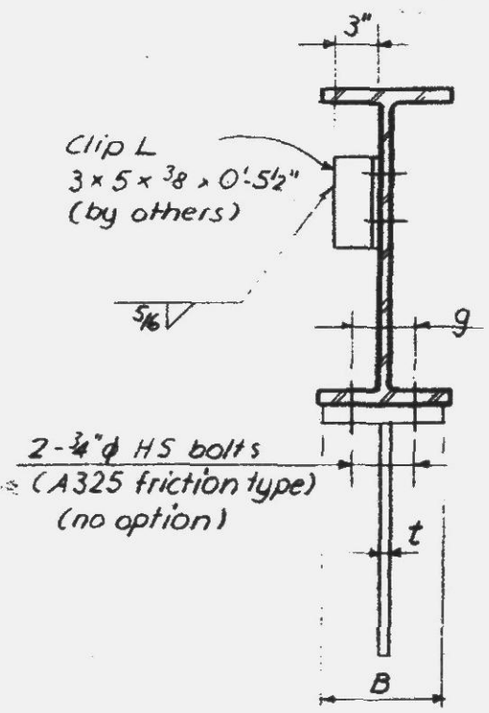

Section b-b

Note:
1. Provide 1 3/4" x 7/16" washers (Fy = 50 ksi) (sq. or round
2. See schedule 12-JK1-107 & 108 for locations.

LICENSED PROFESSIONAL ENGINEER LESLIE E. ROBERTSON No. 34360 STATE OF NEW YORK UNIVERSITY OF THE STATE OF NEW

12-JK1-106

SKILLING - HELLE - CHRISTIANSEN - ROBERTSON — Structural & Civil Engineers

PROJECT THE WORLD TRADE CENTER | TITLE SCHEDULE FOR BEAM CONNECTION TO TOWER 'A' | DATE 11-24-67

REVISIONS

5-1-68

12-3-68

DETAIL No.	BEAM			CONNECTION									g
				TYPE	SEAT ℄			STIFFENER ℄			WELD SIZE		
	SIZE	ELEV.	D		W	t	B	W	t	L	A	B	
A-101	14 WF 30	308'-3"		C	8"	1/2"	6 1/2"	8"	1/2"	15"	5/16	5/16	3 1/2"
A-102	14 WF 34	308'-8 3/4"		C	8"	1/2"	6 1/2"	8"	1/2"	15"	5/16	5/16	3 1/2"
A-103	21 B 49	309'-6"		C	6"	9/16"	6 1/2"	6"	9/16"	12"	5/16	5/16	3 1/2"
A-104				(See 12-JK1-109 for detail)									
A-105	21 B 49	309'-6"		C	6"	1/2"	6 1/2"	6"	1/2"	13"	5/16	5/16	3 1/2"
A-106	21 WF 96	309'-6"		C	5"	9/16"	8 1/2"	5"	9/16"	10"	5/16	5/16	5 1/2"
A-107	21 WF 96	309'-6"		C	5"	9/16"	8 1/2"	5"	9/16"	10"	5/16	5/16	5 1/2"
A-108	21 WF 96	309'-6"		C	5"	9/16"	8 1/2"	5"	9/16"	10"	5/16	5/16	5 1/2"
A-109	21 B 44	309'-5 15/16"		A	7"	1/2"	6 1/2"	7"	1/2"	12"	5/16	5/16	3 1/2"
* A-201	16 WF 36	309'-1"		C	6"	1/2"	6 1/2"	6"	1/2"	12"	5/16	5/16	3 1/2"
A-202	16 WF 36	309'-1"		C	6"	1/2"	6 1/2"	6"	1/2"	12"	5/16	5/16	3 1/2"
A-203	16 WF 36	309'-1"	20 3/4"	A-1	6"	1/2"	8 1/2"	6"	1/2"	12"	5/16	5/16	5 1/2"
A-204	16 WF 36	309'-1"	20 3/4"	A-1	6"	1/2"	8 1/2"	6"	1/2"	12"	5/16	5/16	5 1/2"
A-205	16 WF 36	309'-1"	20 3/4"	A-2	6"	1/2"	8 1/2"	6"	1/2"	12"	5/16	5/16	5 1/2"

NOTE:-

1. See dwg 12-JK1-105 & 106 for detail of connection.
2. * — Provide type C seat connection & clip L as shown on 12-JK1-106 and field weld to tower spandrel ℄.

LICENSED PROFESSIONAL ENGINEER — LESLIE E. ROBERTSON — No. 34360 — UNIVERSITY OF THE STATE OF NEW YORK

12-JK1-107

SKILLING – HELLE / CHRISTIANSEN – ROBERTSON — Structural & Civil Engineers

PROJECT: THE WORLD TRADE CENTER | TITLE: SCHEDULE FOR BEAM CONNECTION TO TOWER A | DATE: 11-24-67

REVISIONS
1-5-68
5-1-68

DETAIL No.	BEAM			CONNECTION										g
				TYPE	SEAT ℄			STIFFENER ℄			WELD SIZE			
	SIZE	ELEV.	D		W	t	B	W	t	L	A	B		
A-301	16WF36	309'-3"		C	7"	1/2"	6 1/2"	7"	1/2"	13"	5/16"	5/16"	3 1/2"	
A-302	30WF99	309'-3"	1'-8"	B	8	3/4	8 1/2	8	3/4	19	3/8	3/8	5 1/2	
A-303	30WF99	309'-3"	1'-8"	B	9	3/4	8 1/2	9	3/4	18	1/2	1/2	5 1/2	
A-304	30WF99	309'-3"	1'-8"	B	9	3/4	8 1/2	9	3/4	18	1/2	1/2	5 1/2	
A-305	30WF108	309'-3"	1'-8"	B	10	3/4	9	10	3/4	20	1/2	1/2	5 1/2	
A-306	30WF99	309'-3"	1'-8"	B	10	3/4	9	10	3/4	20	1/2	1/2	5 1/2	
A-307	30WF172	309'-3"	1'-8"	B	8	15/16	9	8	15/16	20	3/8	3/8	5 1/2	
A-308	33WF141	308'-8"		C	5	7/8	8 1/2	5	7/8	15	5/16	5/16	5 1/2	
A-309	16WF45	308'-4"		C	6	1/2	6 1/2	6	1/2	12	5/16	5/16	3 1/2	
A-310				(See 12-JK1-110 for detail)										
A-401	18WF55	307'-5"		C	5	9/16	6 1/2	5	9/16	11	5/16	5/16	3 1/2	
A-402	24B55	307'-11"		C	↕	↕	↕	↕	↕	↕	↕	↕	↕	
A-403	18WF55	307'-11"		C										
A-404	↕	307'-11"		C										
A-405		308'-1"		C										
A-406	↕	308'-1"		C	↕	↕	↕	↕	↕	↕	↕	↕	↕	
A-407	18WF55	308'-3"		C	5	9/16	6 1/2	5	9/16	11	↕	↕	3 1/2	
A-408	36WF135	308'-3"		C	7	7/8	9	7	7/8	20	5/16	5/16	5 1/2	

NOTE:-

1. See dwg 12-JK1-105&106 for detail of connection.

LICENSED PROFESSIONAL ENGINEER — LESLIE E. ROBERTSON — No. 34360 — UNIVERSITY OF THE STATE OF NEW YORK

12-JK1-108

SKILLING – HELLE – CHRISTIANSEN – ROBERTSON

PROJECT THE WORLD TRADE CENTER | DETAIL OF BEAM CONNECTION TO TOWER A – A-104

REVISIONS

12-3-68

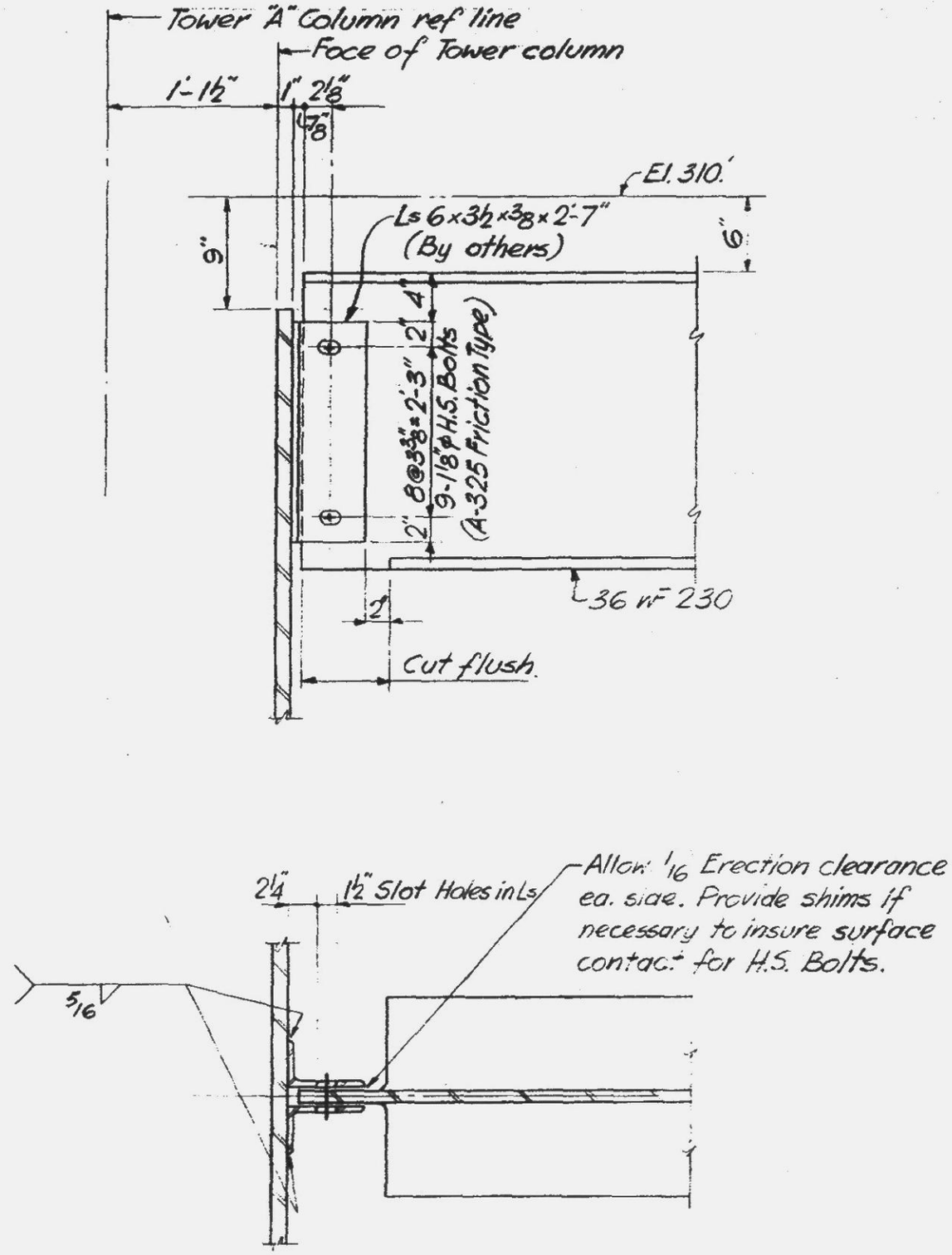

Note:
1. Provide 2½ × ⅝ washers (sq. or round) with Fy=50 KSI.

LICENSED PROFESSIONAL ENGINEER
LESLIE E. ROBERTSON
No. 34360
UNIVERSITY OF THE STATE OF NEW YORK

12-JKI-109

SKILLING - HELLE - CHRISTIANSEN - ROBERTSON — STRUCTURAL & CIVIL ENGINEERS

PROJECT THE WORLD TRADE CENTER | TITLE BEAM CONNECTION TO TOWER 'A' — A-310 | DATE 11-24-67

REVISIONS
1-5-68

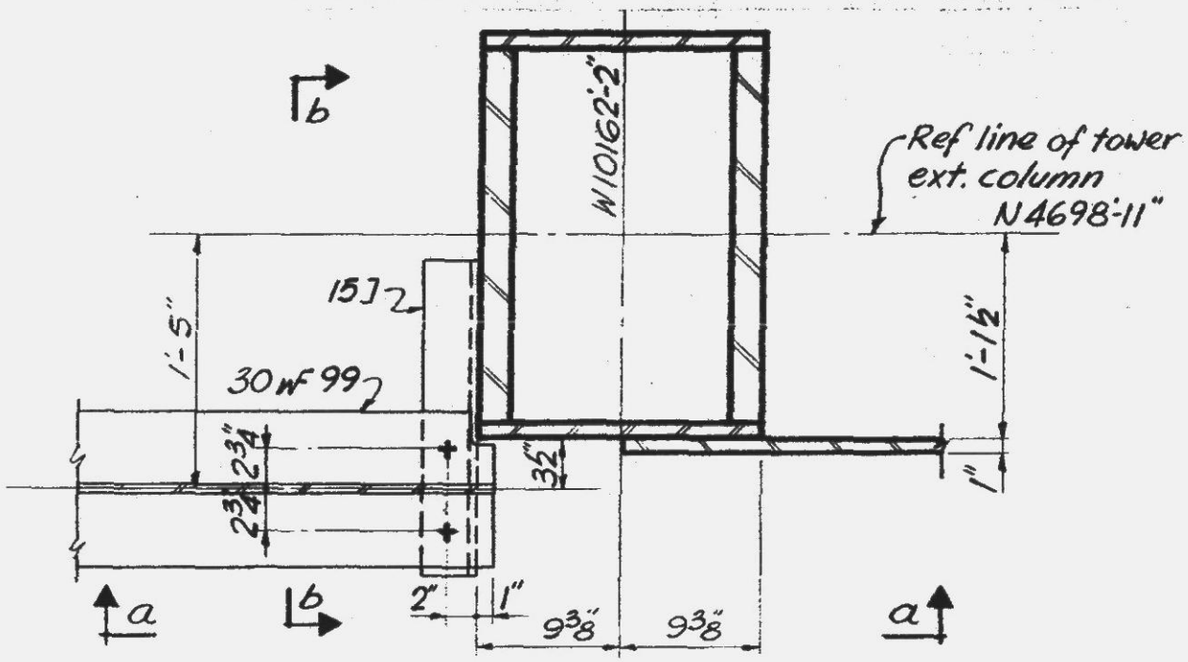

PLAN

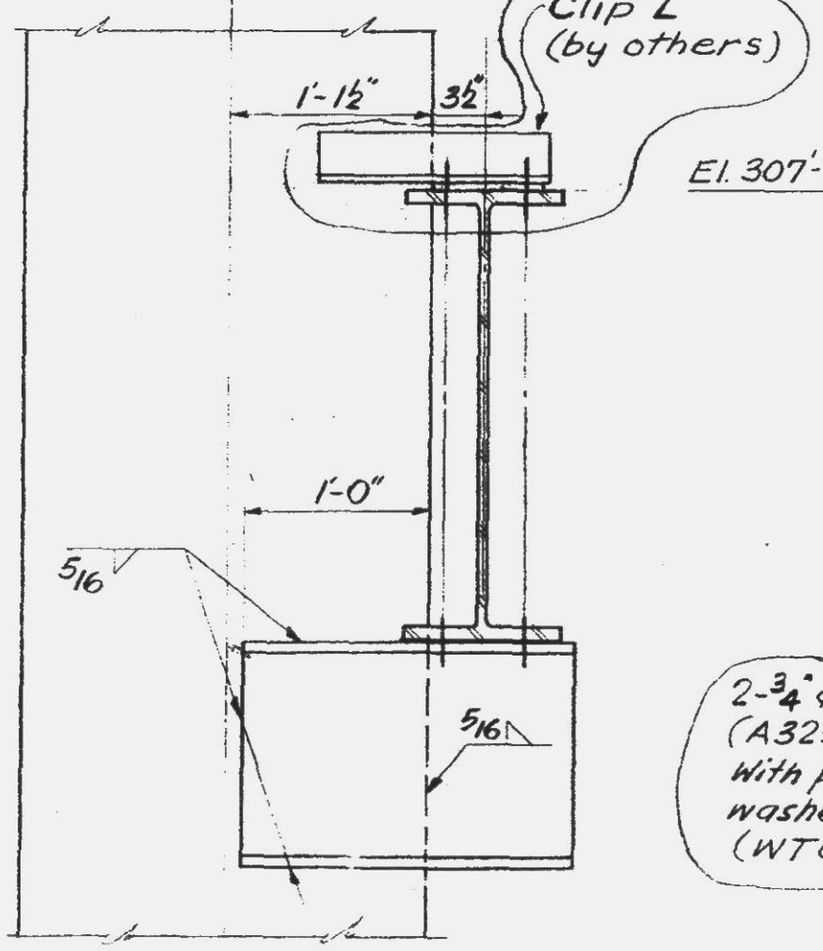

Section b-b

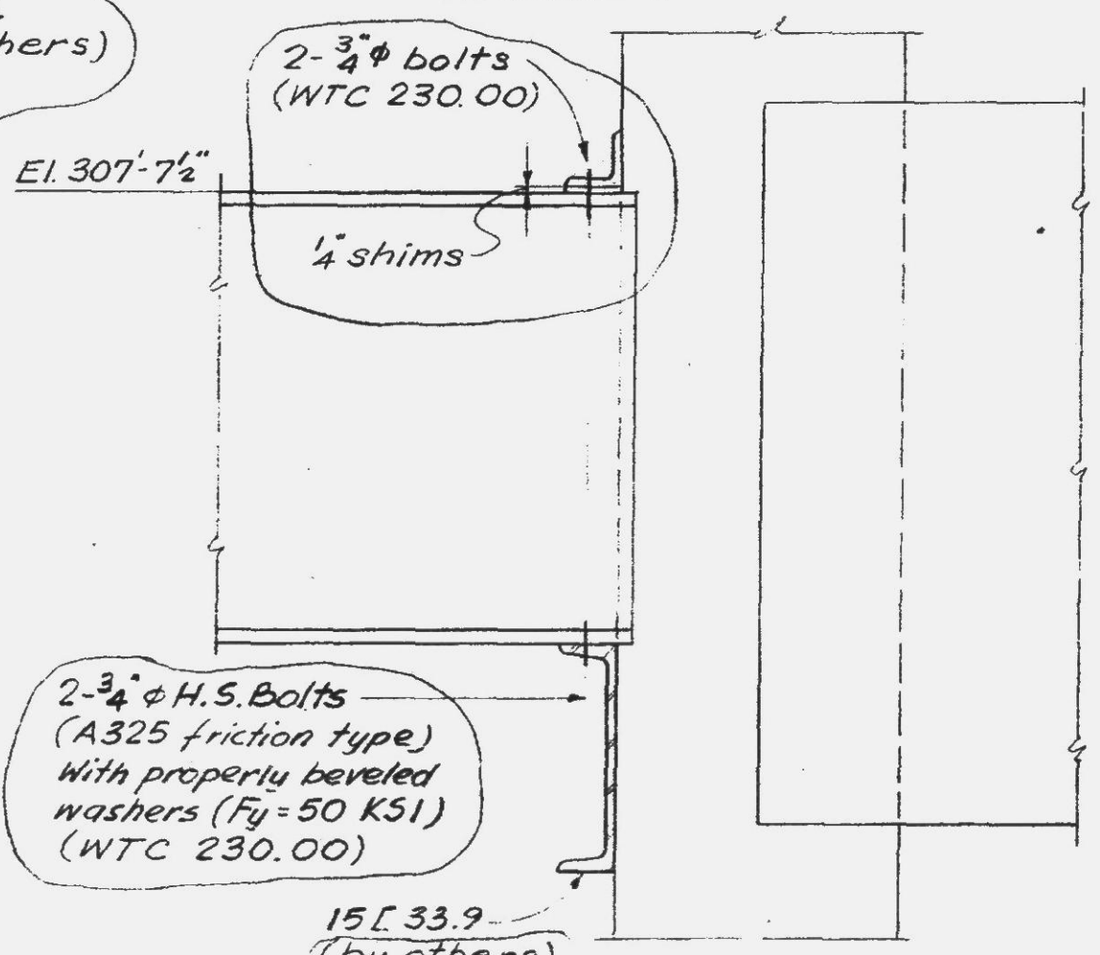

Section a-a

LICENSED PROFESSIONAL ENGINEER
LESLIE E. ROBERTSON
No. 34360
UNIVERSITY OF THE STATE OF NEW YORK

12-JK1-110

SKILLING - HELLE - CHRISTIANSEN - ROBERTSON — Structural & Civil Engineers

PROJECT THE WORLD TRADE CENTER | TITLE BEAM CONNECTION TO TOWER "A" | DATE 11-24-67

REVISIONS
1-10-68
6-28-68

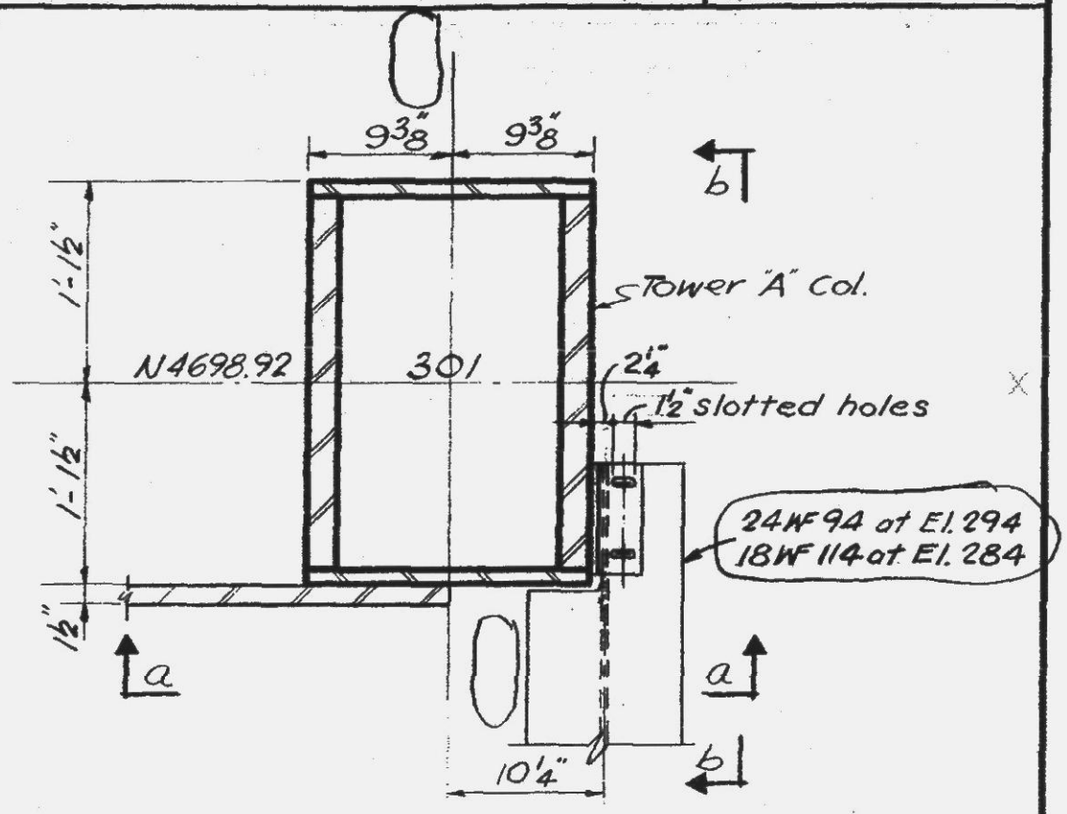

PLAN

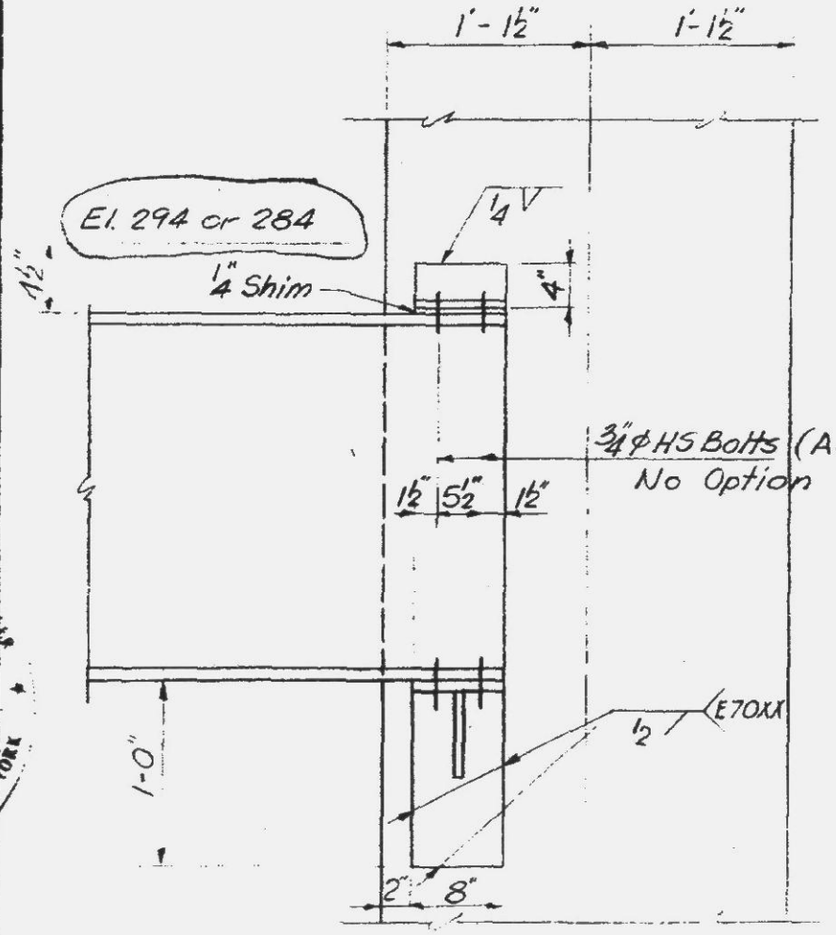

Section b-b

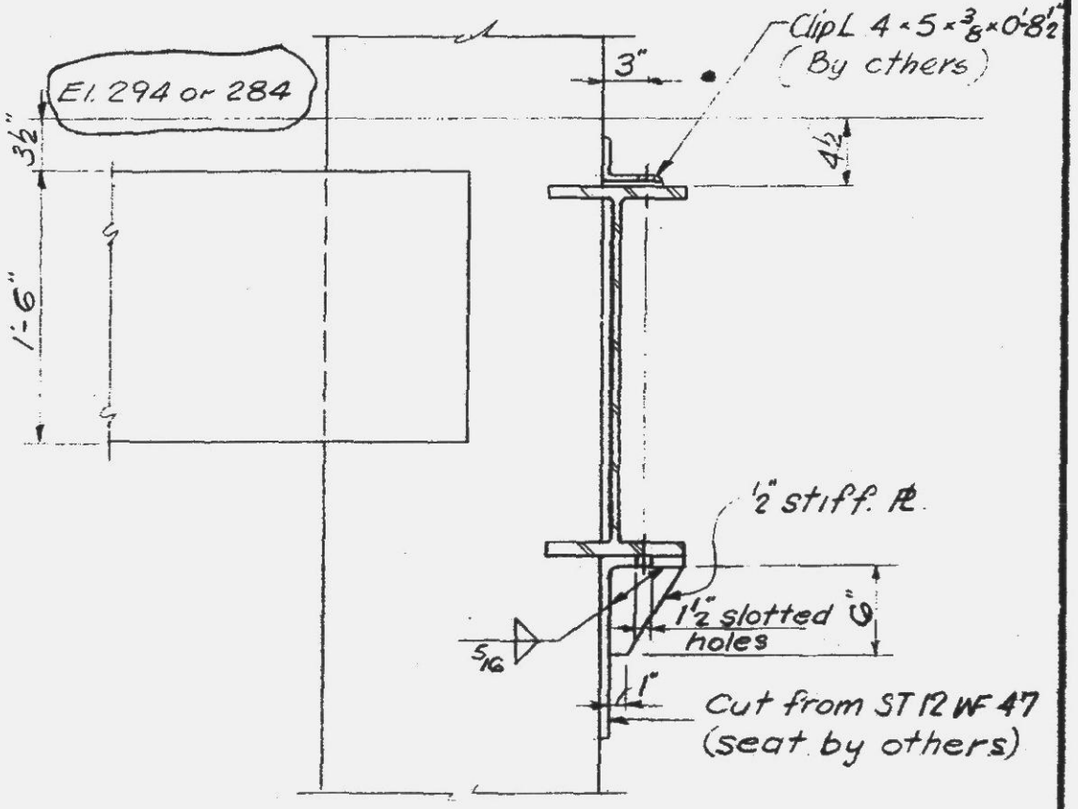

Section a-a

LICENSED PROFESSIONAL ENGINEER
LESLIE E. ROBERTSON
No. 34360
UNIVERSITY OF THE STATE OF NEW YORK

12-JK:-111

SKILLING - HELLE - CHRISTIANSEN - ROBERTSON — Structural & Civil Engineers

PROJECT: THE WORLD TRADE CENTER | TITLE: DETAIL OF BEAM CONNECTION TO TOWER 'A' | DATE: 11-24-67

REVISIONS
1-5-68

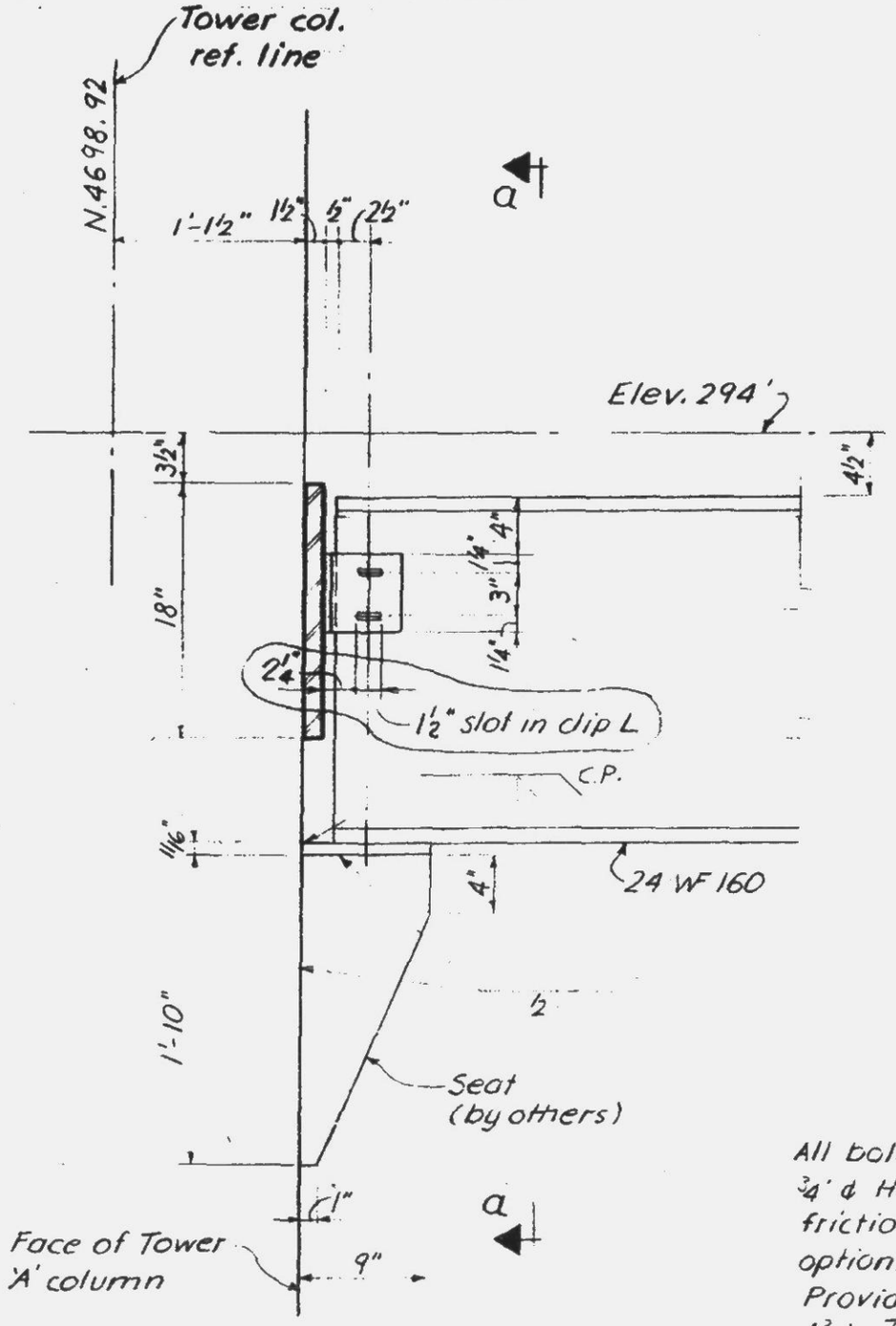

Elevation

All bolts shown to be ¾" ϕ HS bolts (A325 friction type) (no option)
Provide washers 1¾" x 7/16 (sq. or round) with Fy - 50 Ksi.

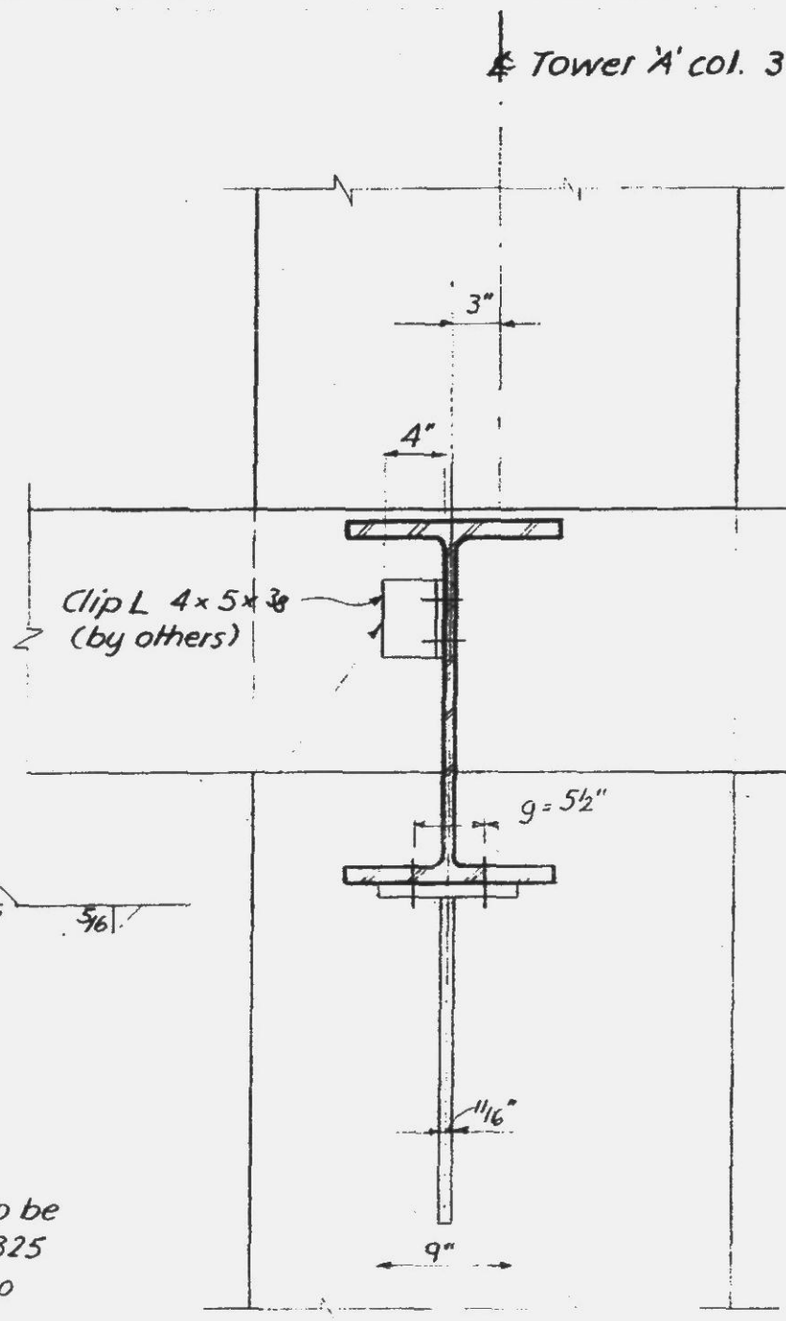

Section a-a

12-JK1-112

SKILLING - HELLE - CHRISTIANSEN - ROBERTSON — Structural & Civil Engineers

PROJECT THE WORLD TRADE CENTER | TITLE DETAIL OF BEAM CONNECTION TO TOWER 'A' | DATE 1-5-68

REVISIONS

1-10-68

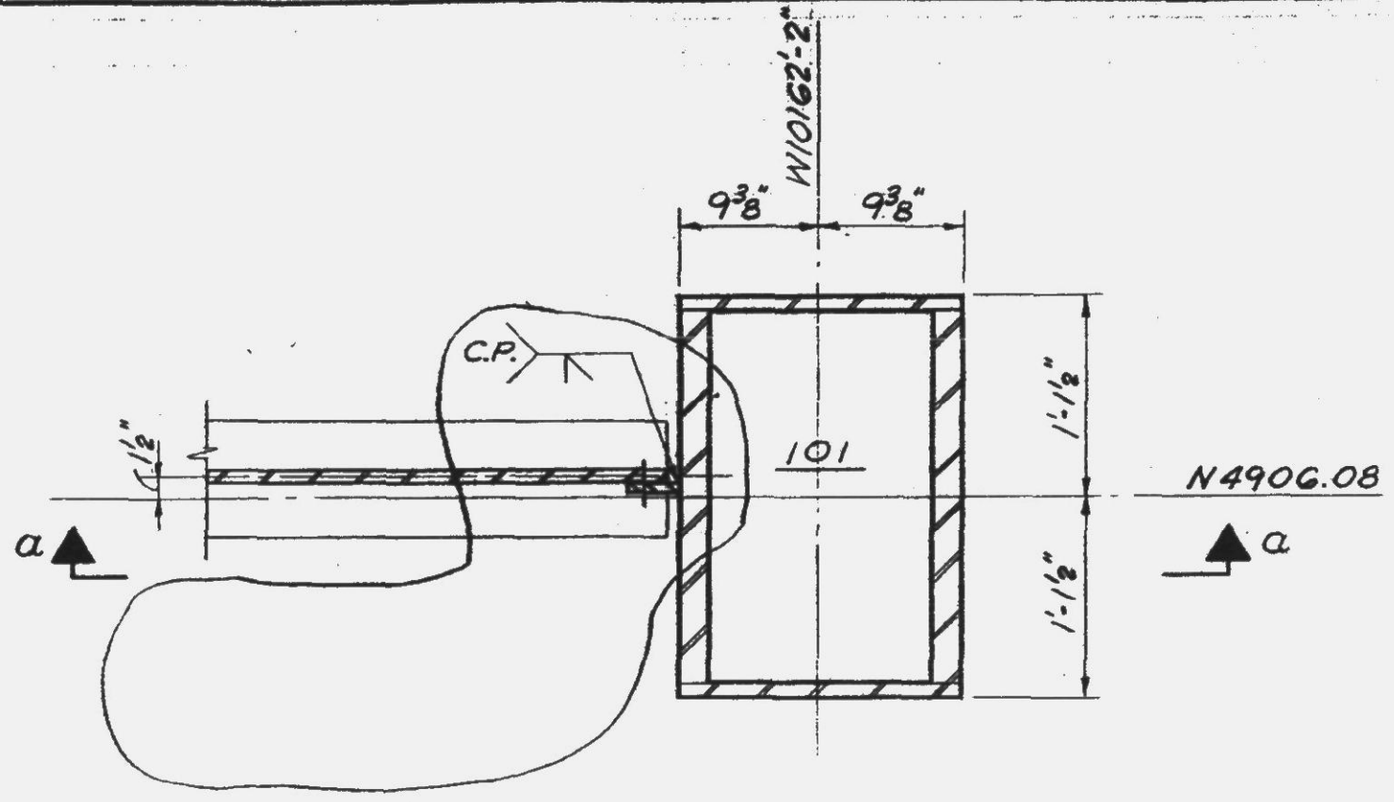

PLAN

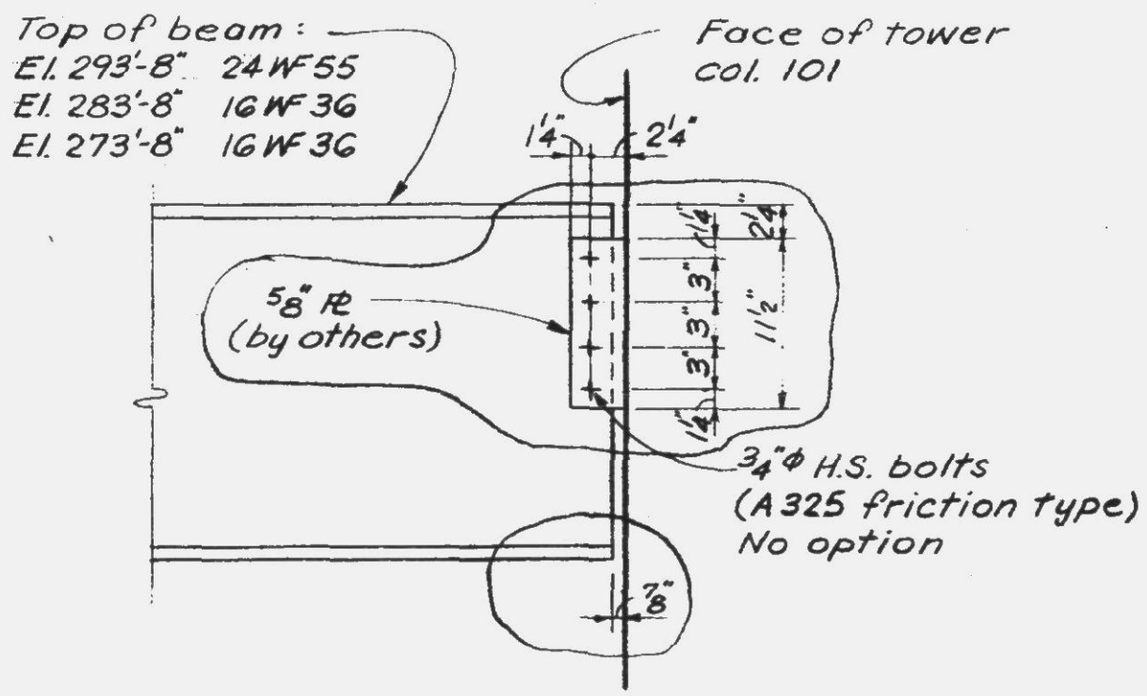

Section a-a

LICENSED PROFESSIONAL ENGINEER LESLIE E. ROBERTSON STATE OF NEW YORK

12-JK1-113

SKILLING - HELLE - CHRISTIANSEN - ROBERTSON — Structural & Civil Engineers

PROJECT: THE WORLD TRADE CENTER | TITLE: DETAIL OF BEAM CONNECTION TO TOWER 'A' | DATE: 1-5-68

REVISIONS

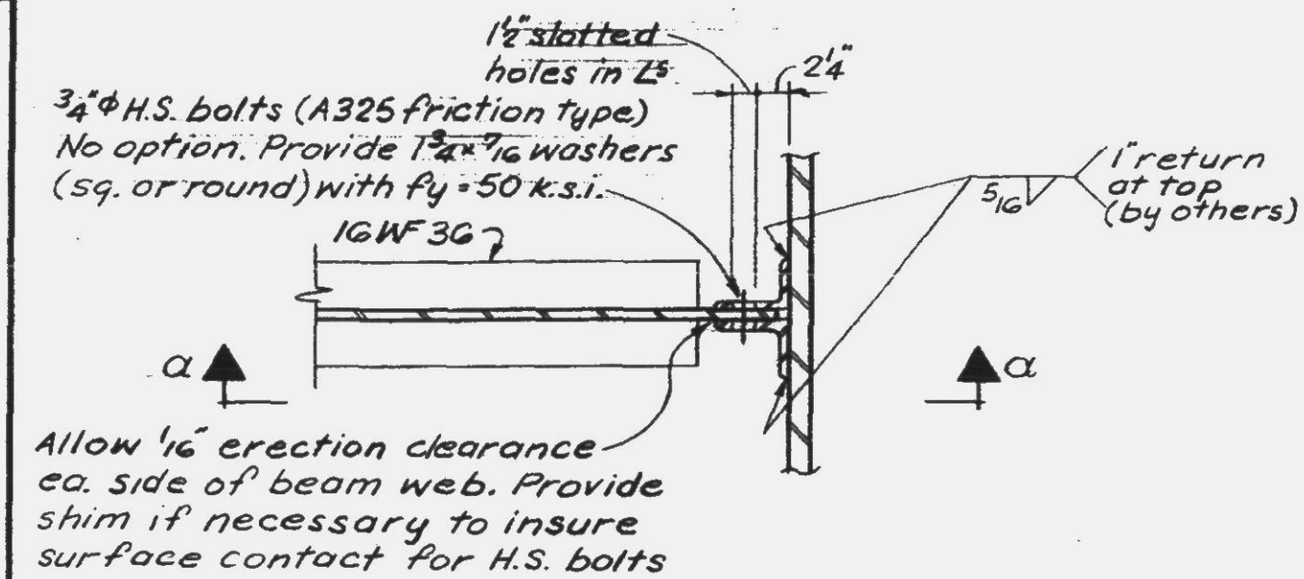

Section b-b

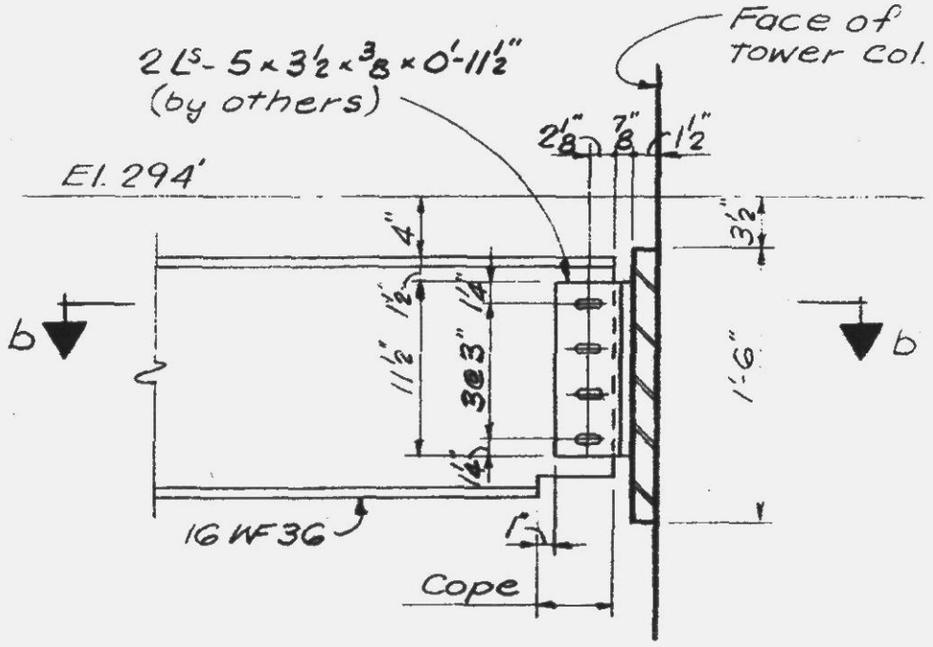

Section a-a

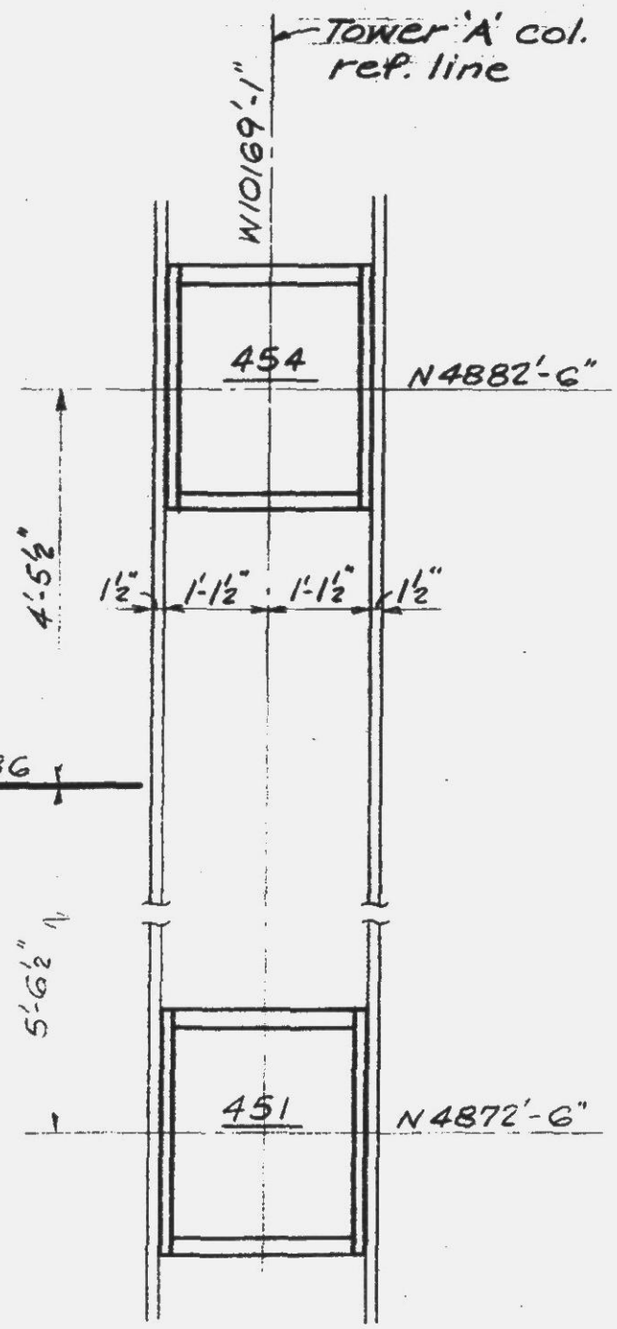

Location of beam

12-JK1-114

SKILLING - HELLE - CHRISTIANSEN - ROBERTSON | Structural & Civil Engineers

PROJECT THE [illegible] CENTER | TITLE DETAIL OF BEAM CONNECTION TO TOWER A | DATE 1-5-68

REVISIONS

1-10-68

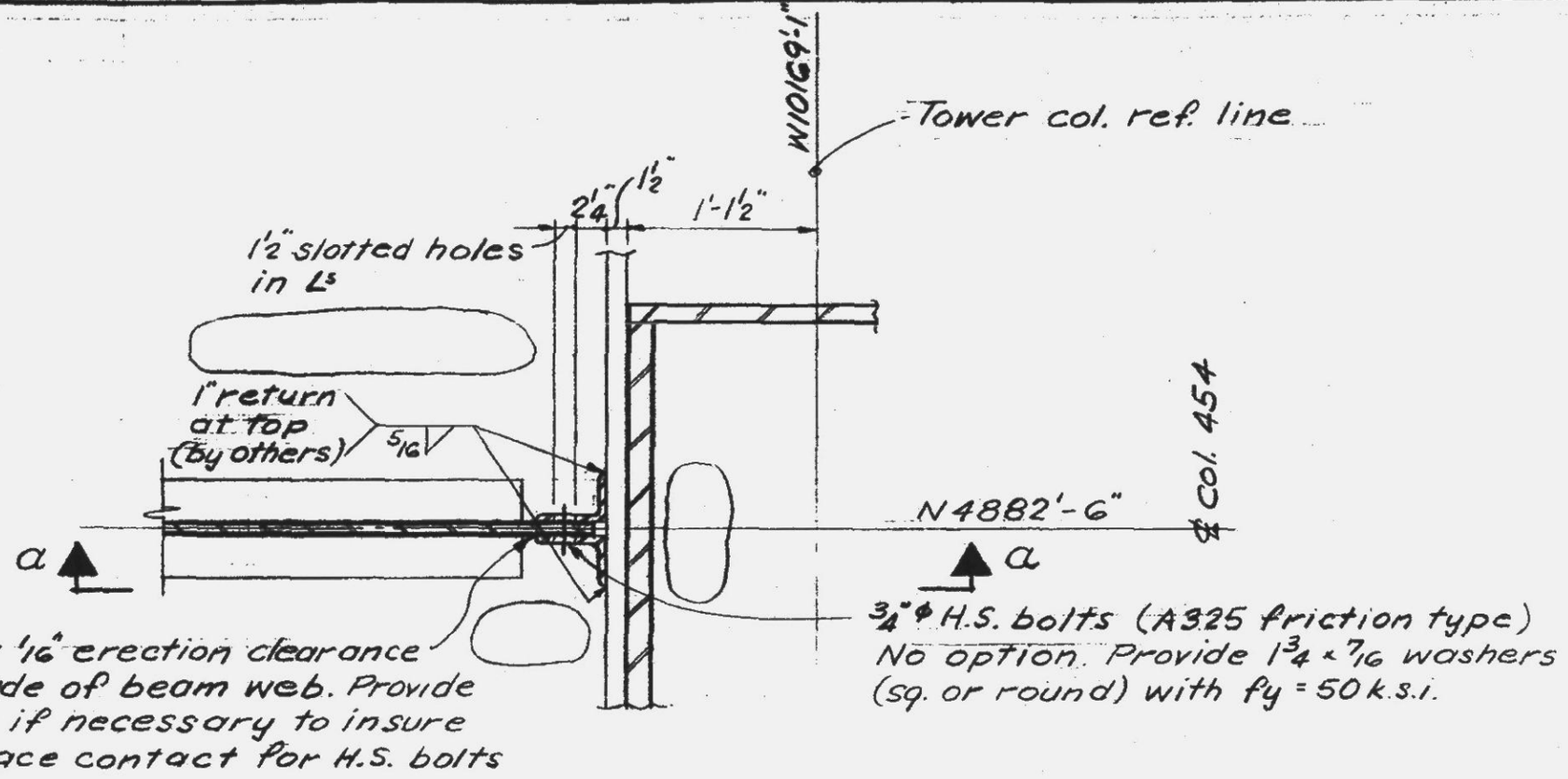

Section b-b

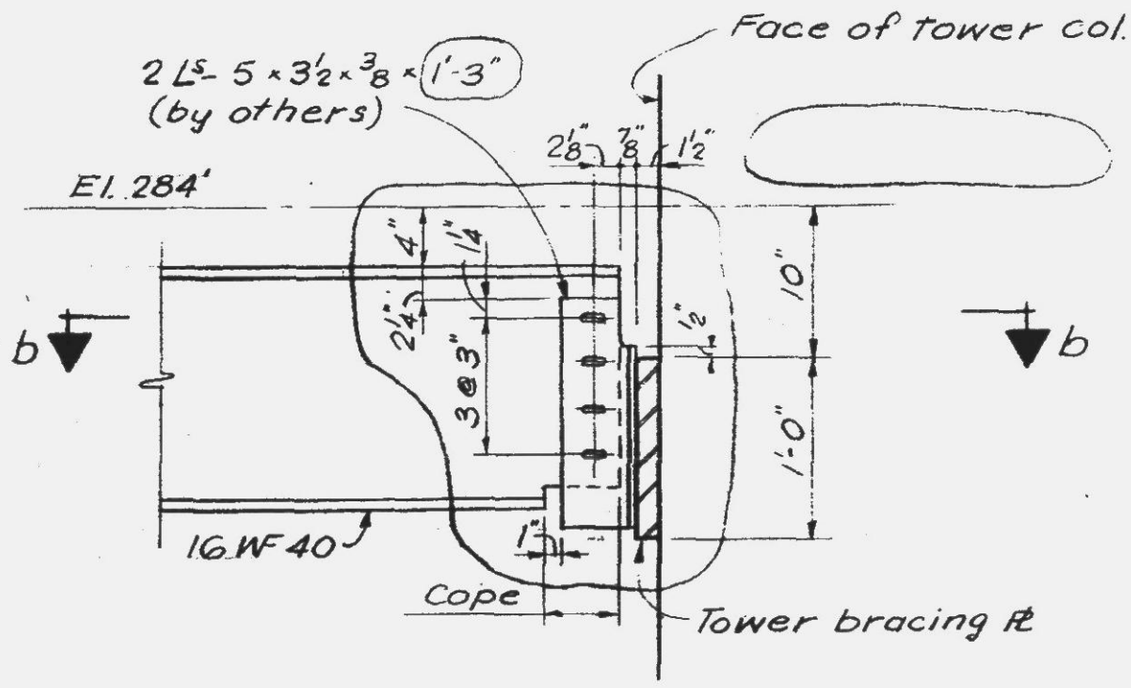

Section a-a

LICENSED PROFESSIONAL ENGINEER
LESLIE E. ROBERTSON
No. 34260
UNIVERSITY OF THE STATE OF NEW YORK

12-JK1-115

SKILLING - HELLE - CHRISTIANSEN - ROBERTSON Structural & Civil Engineers

PROJECT THE WORLD TRADE CENTER | TITLE DETAIL OF BEAM CONNECTION TO TOWER 'A' | DATE 1-5-68

REVISIONS

1-10-68

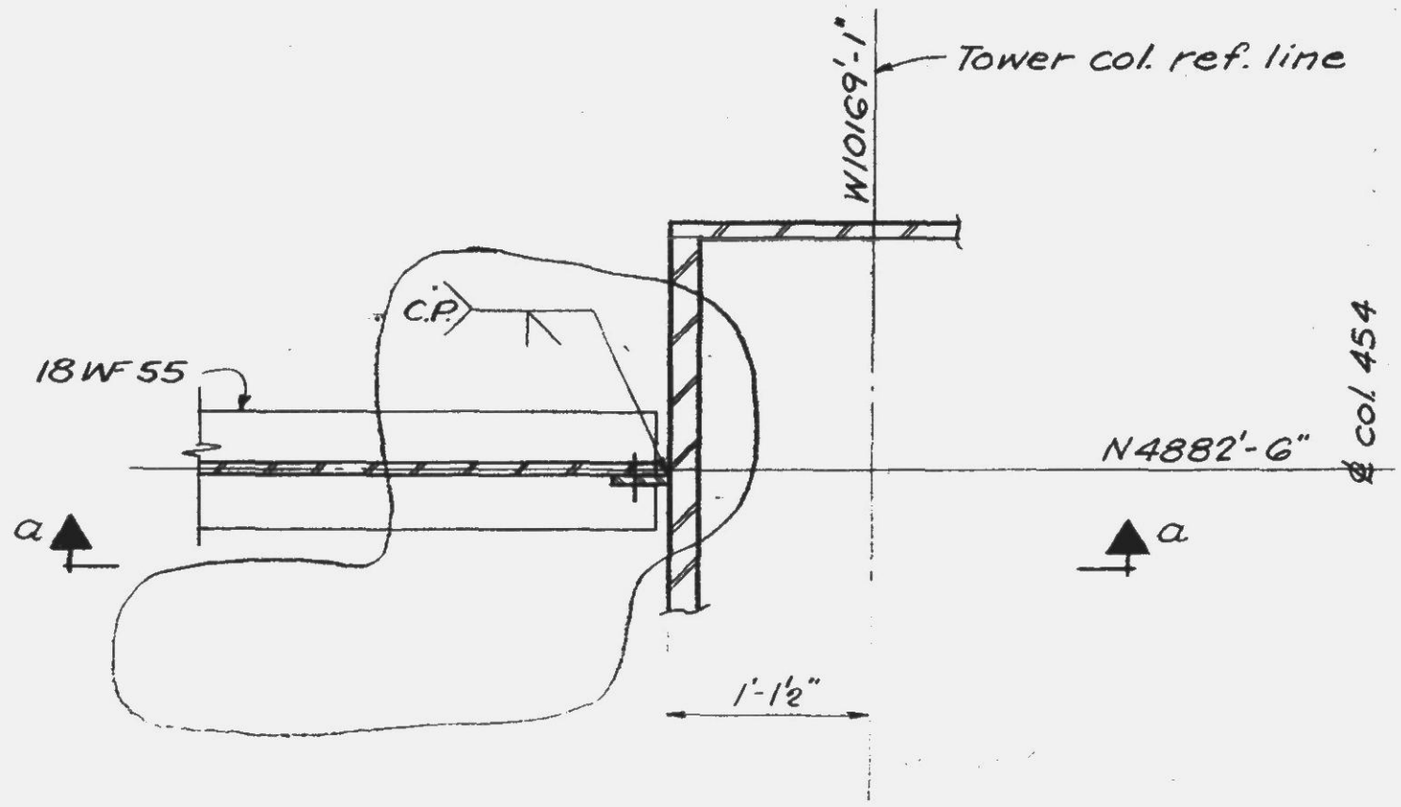

Section b-b

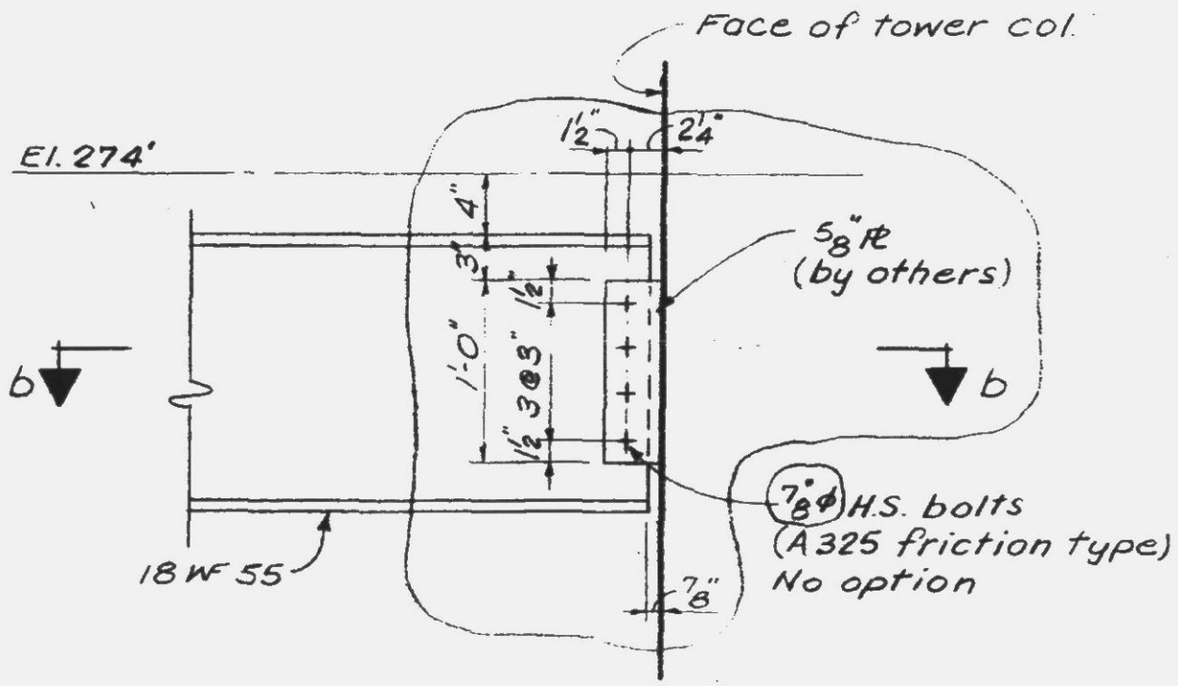

Section a-a

12-JK1-116

SKILLING - HELLE - CHRISTIANSEN - ROBERTSON Structural & Civil Engineers

PROJECT THE WORLD TRADE CENTER | TITLE DETAIL OF BEAM CONNECTION TO TOWER 'A' | DATE 6-28-68

REVISIONS

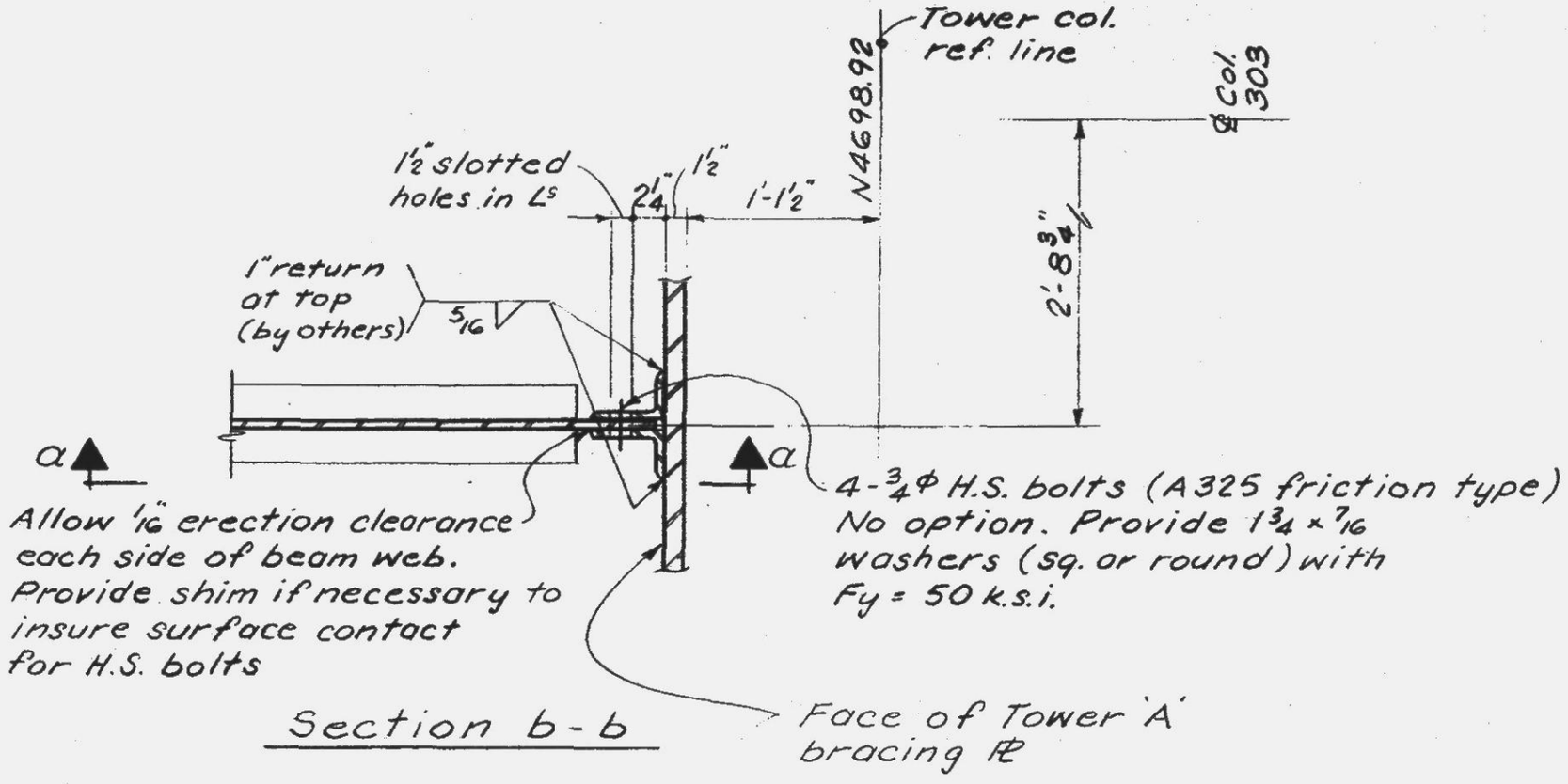

Section b-b

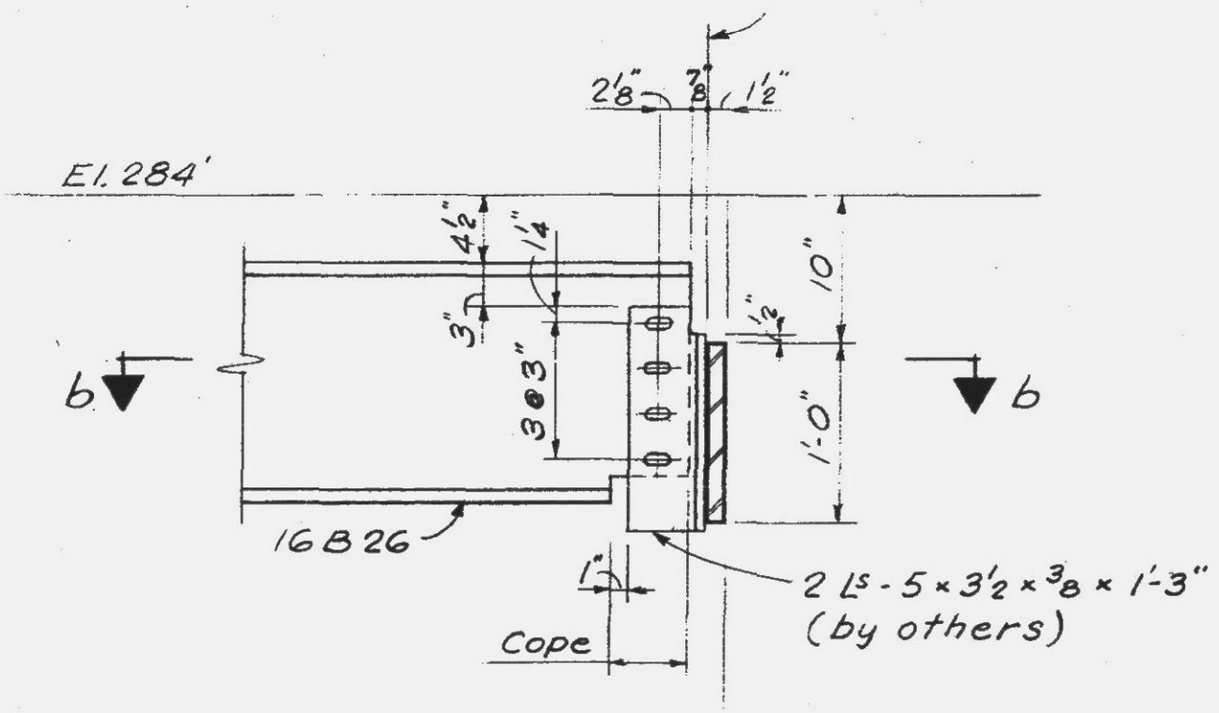

Section a-a

LICENSED PROFESSIONAL ENGINEER
LESLIE E. ROBERTSON
No. 34360
UNIVERSITY OF THE STATE OF NEW YORK

12-JK1-117

SKILLING - HELLE - CHRISTIANSEN - ROBERTSON Structural & Civil Engineers

PROJECT THE WORLD TRADE CENTER | TITLE DETAIL OF BEAM CONNECTION TO TOWER 'A' | DATE 6-28-68

REVISIONS

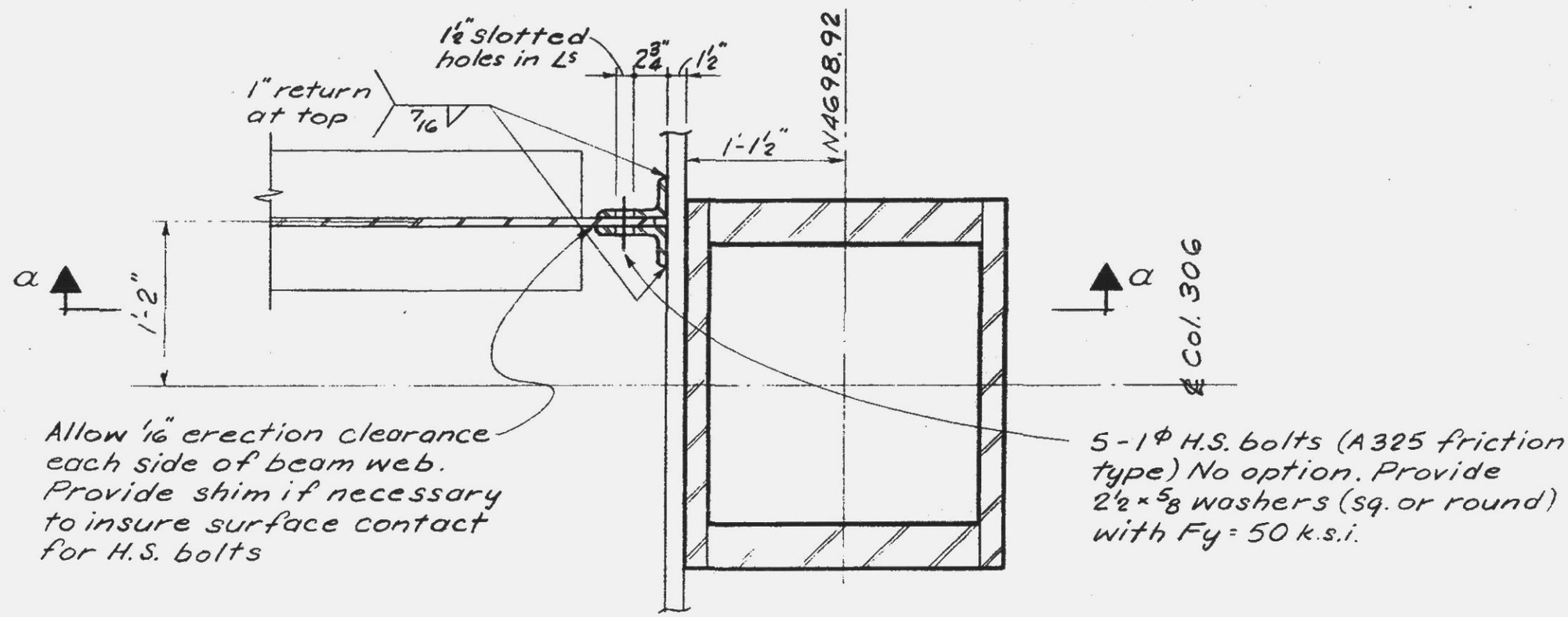

Section b-b

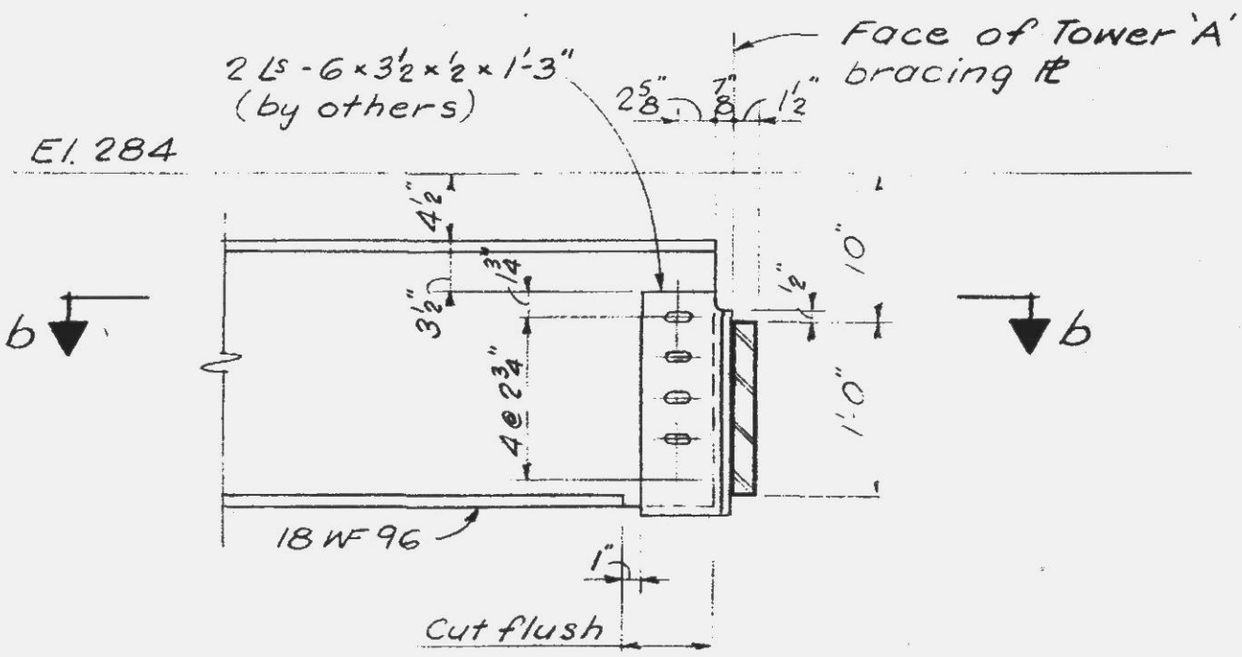

Section a-a

LICENSED PROFESSIONAL ENGINEER
LESLIE E. ROBERTSON
No. 34360
UNIVERSITY OF THE STATE OF NEW YORK

12-JK1-118

SKILLING, HELLE, CHRISTIANSEN, ROBERTSON — Structural & Civil Engineers

PROJECT: THE WORLD TRADE CENTER | TITLE: BEAM CONNECTION TO TOWER "A" | DATE: 10-15-68

REVISIONS

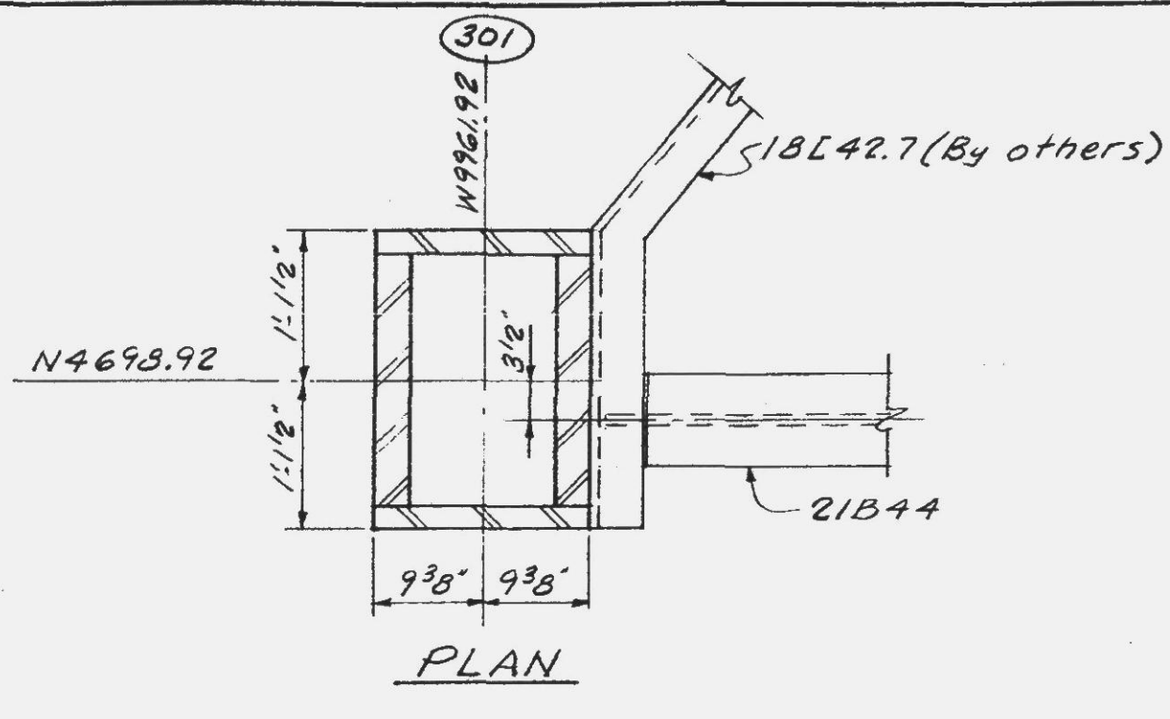

PLAN

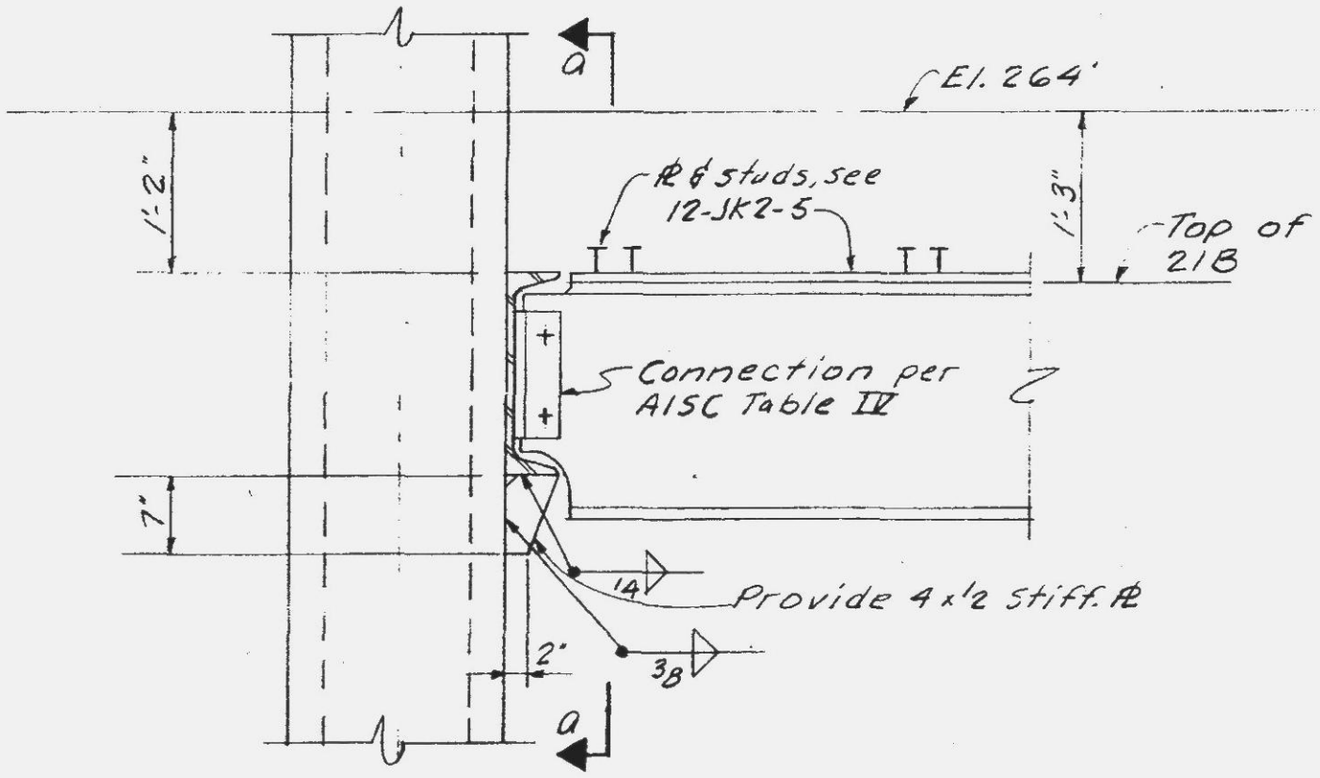

ELEVATION

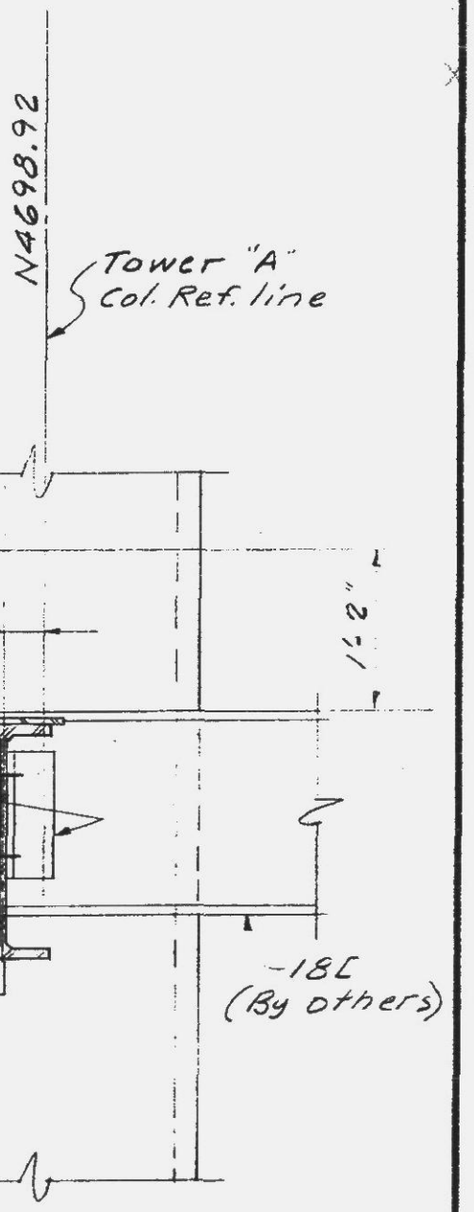

Section a-a

LICENSED PROFESSIONAL ENGINEER — LESLIE E. ROBERTSON — No. 34300 — UNIVERSITY OF THE STATE

DESIGNED

DRAWN

REVIEWED

12-JK1-119

SKILLING, HELLE, CHRISTIANSEN, ROBERTSON — Structural & Civil Engineers

PROJECT: THE WORLD TRADE CENTER | TITLE: BEAM CONNECTION DETAIL TO TOWER 'A' | DATE: 11-5-68

REVISIONS

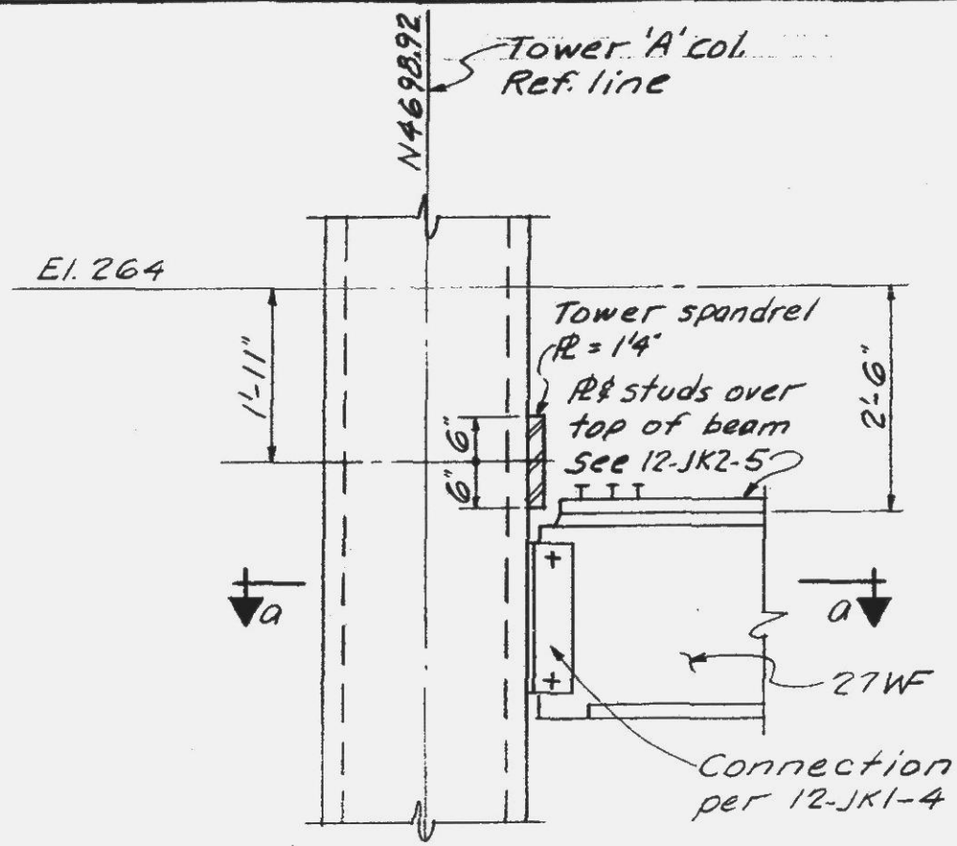

Detail-1

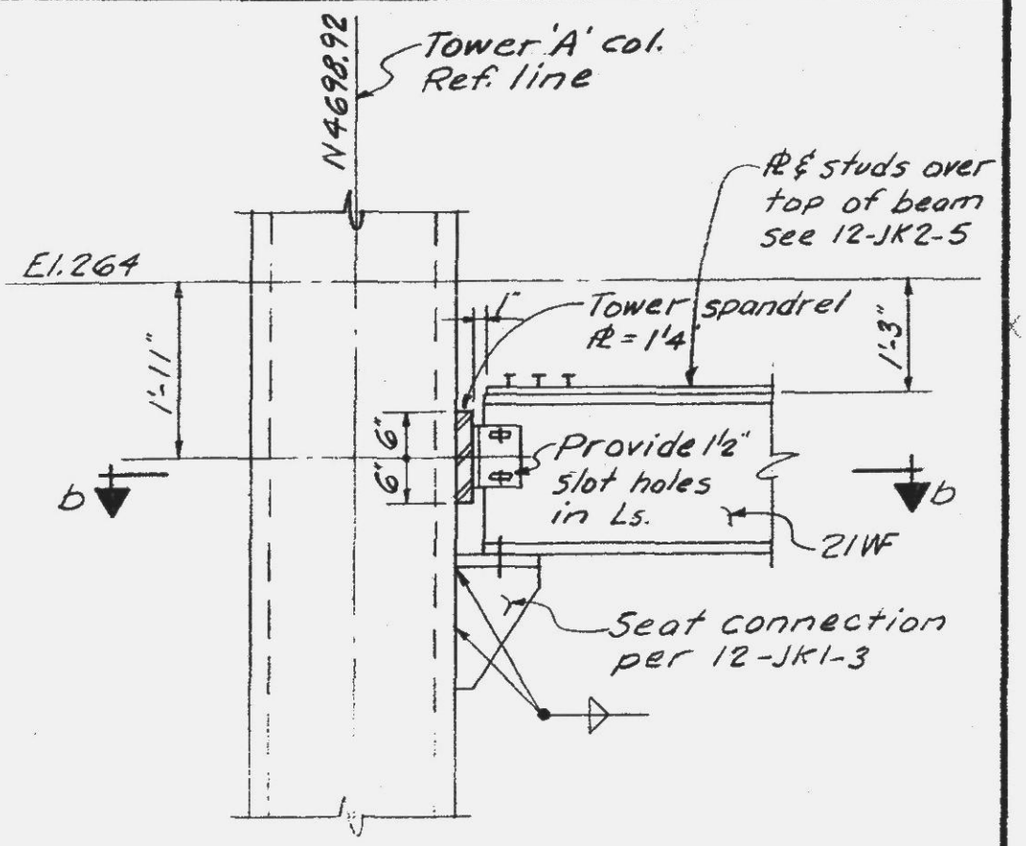

Detail-2

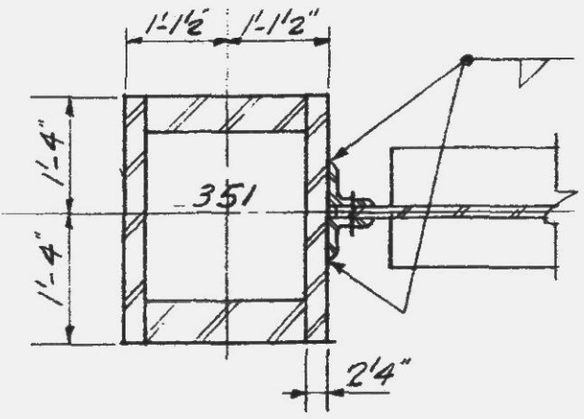

Section a-a

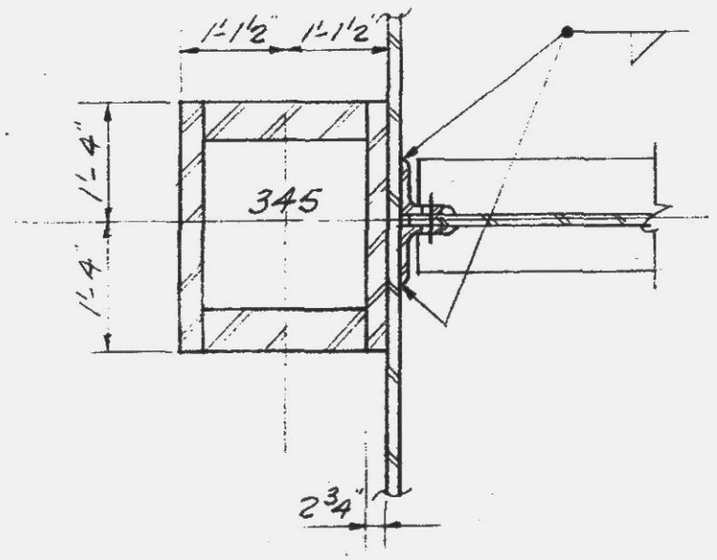

Section b-b

Note:
1. All welds to be E70xx

LICENSED PROFESSIONAL ENGINEER
LESLIE E. ROBERTSON
No. 34360
UNIVERSITY OF THE STATE OF NEW YORK

DESIGNED

DRAWN

REVIEWED

12-JK1-120

SKILLING, HELLE, CHRISTIANSEN, ROBERTSON — Structural & Civil Engineers

PROJECT: THE WORLD TRADE CENTER | TITLE: BEAM CONNECTION TO TOWER 'A' | DATE: 11-27-68

REVISIONS

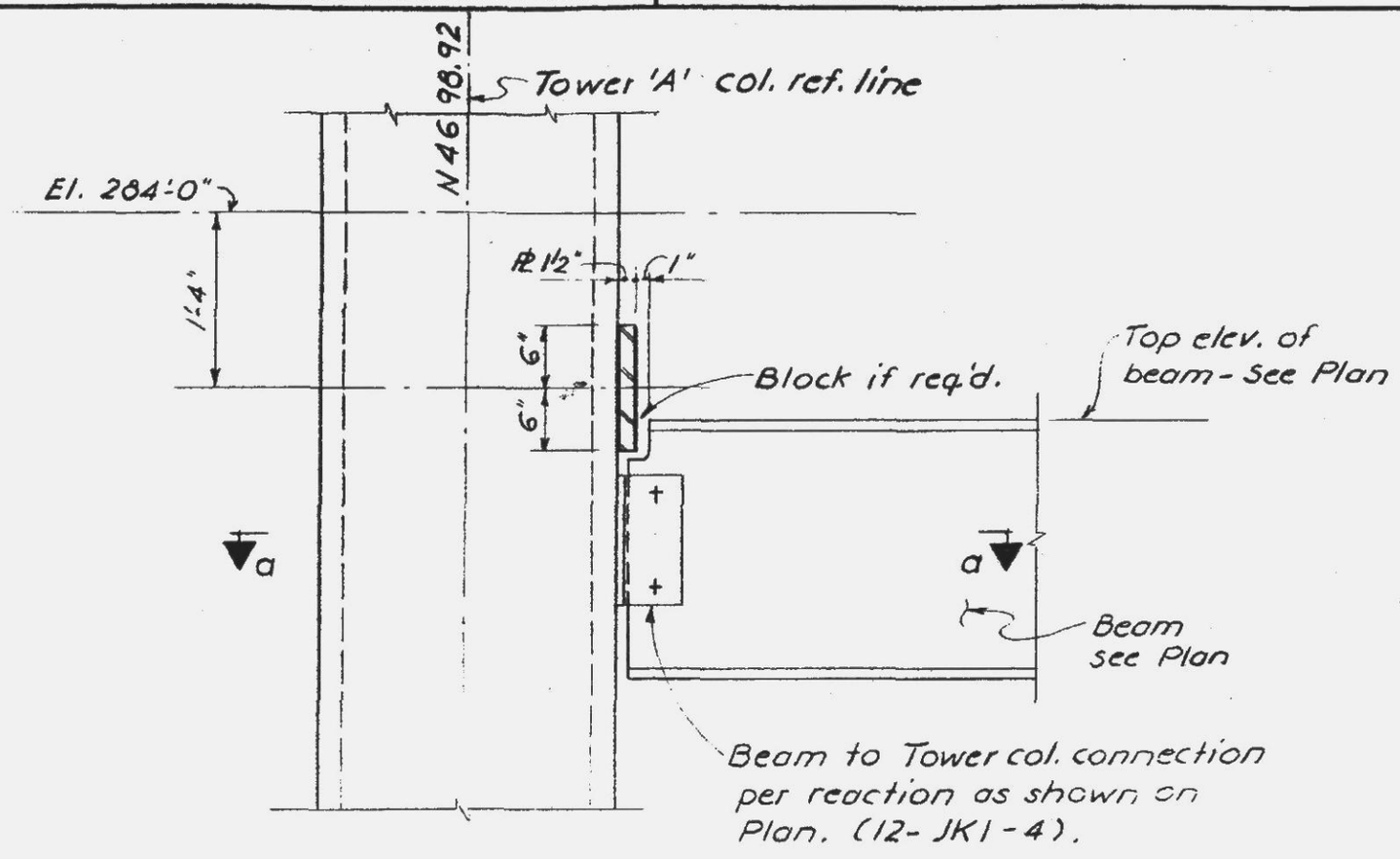

ELEVATION

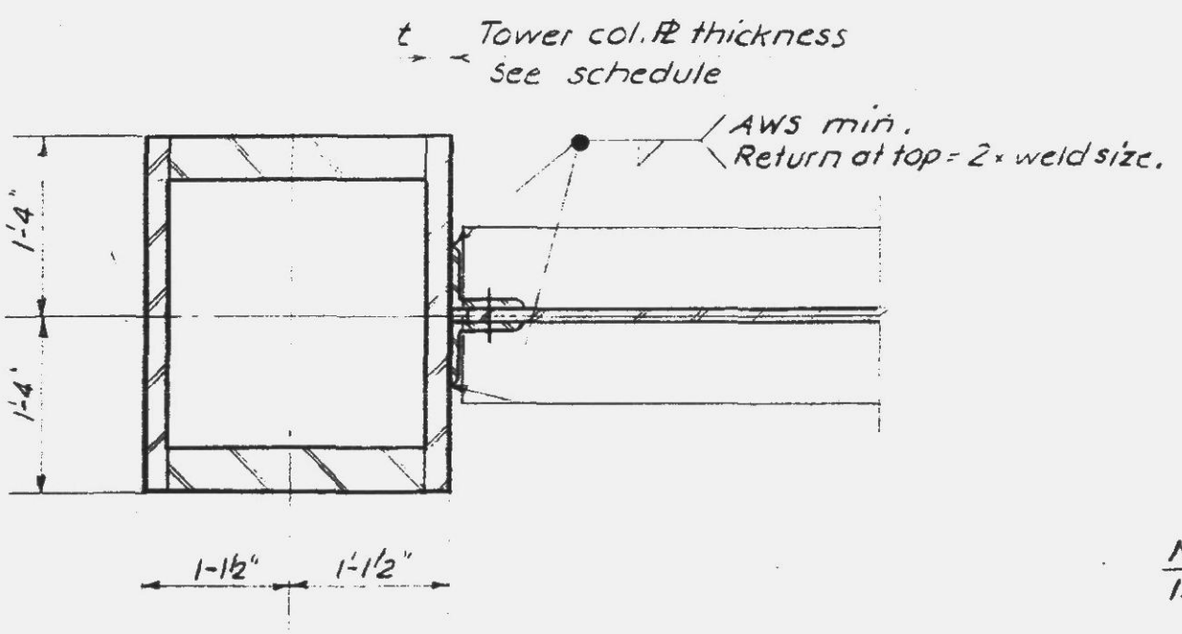

Section a-a

TOWER COLUMN ℄ - THICKNESS	
COL. NO.	t (IN)
303	1½
309	2¼
315	2¾
321	2¾
327	2⅞
333	3
339	3
351	2¼

Notes:
1. All welds to be E70xx.

LICENSED PROFESSIONAL ENGINEER — LESLIE E. ROBERTSON — No. 34360 — UNIVERSITY OF THE STATE OF NEW YORK

DESIGNED

DRAWN

REVIEWED

12-JK1-121

SKILLING, HELLE, CHRISTIANSEN, ROBERTSON — Structural & Civil Engineers

PROJECT THE WORLD TRADE CENTER | TITLE BEAM CONNECTION TO TOWER 'A' | DATE 11-27-68

REVISIONS

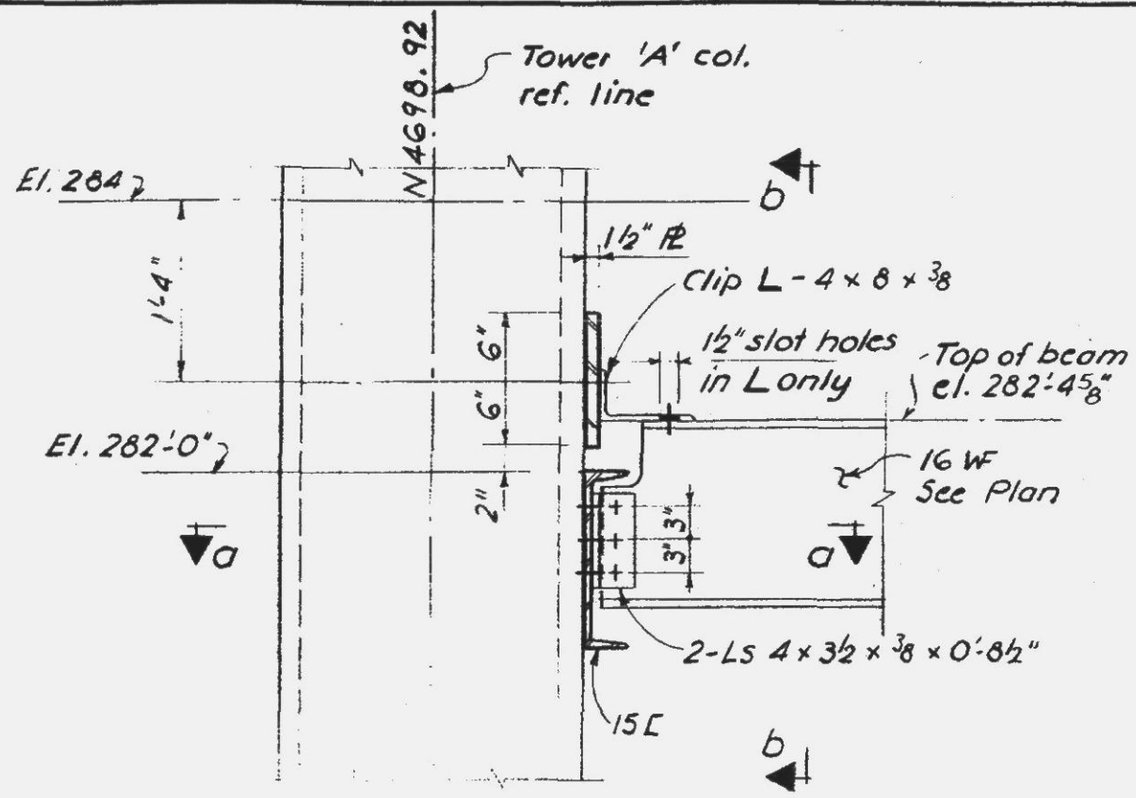

ELEVATION

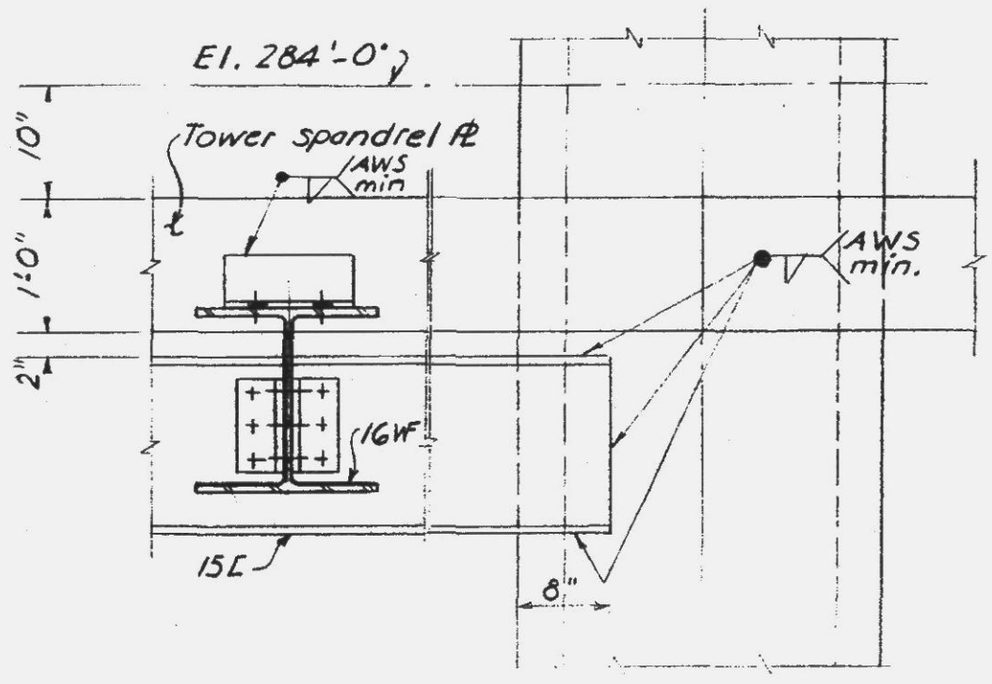

Section b-b

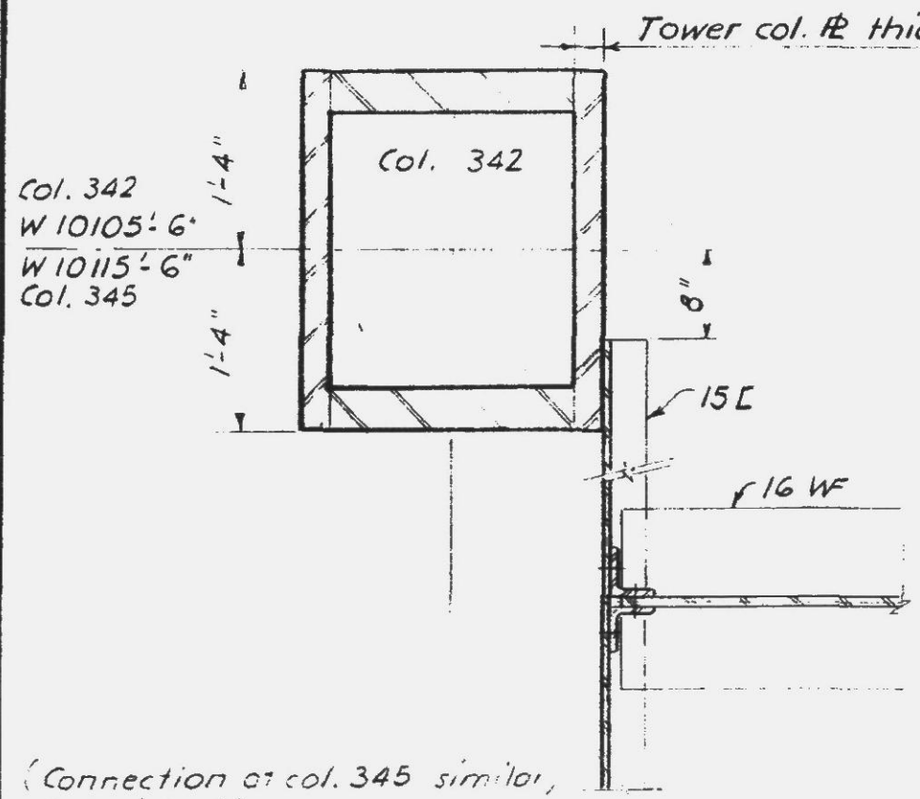

Section a-a

Notes:
1. All bolts to be ¾" ϕ H.S. friction type.
2. All welds to be E 70XX.

LICENSED PROFESSIONAL ENGINEER LESLIE E. ROBERTSON No. 34360 UNIVERSITY OF THE STATE OF NEW YORK

DESIGNED

DRAWN

REVIEWED

12-JK1-122

SKILLING, HELLE, CHRISTIANSEN, ROBERTSON — Structural & Civil Engineers

PROJECT: THE WORLD TRADE CENTER | TITLE: BEAM CONNECTION DETAIL TO TOWER B | DATE: 9-20-68

REVISIONS
1-3-69

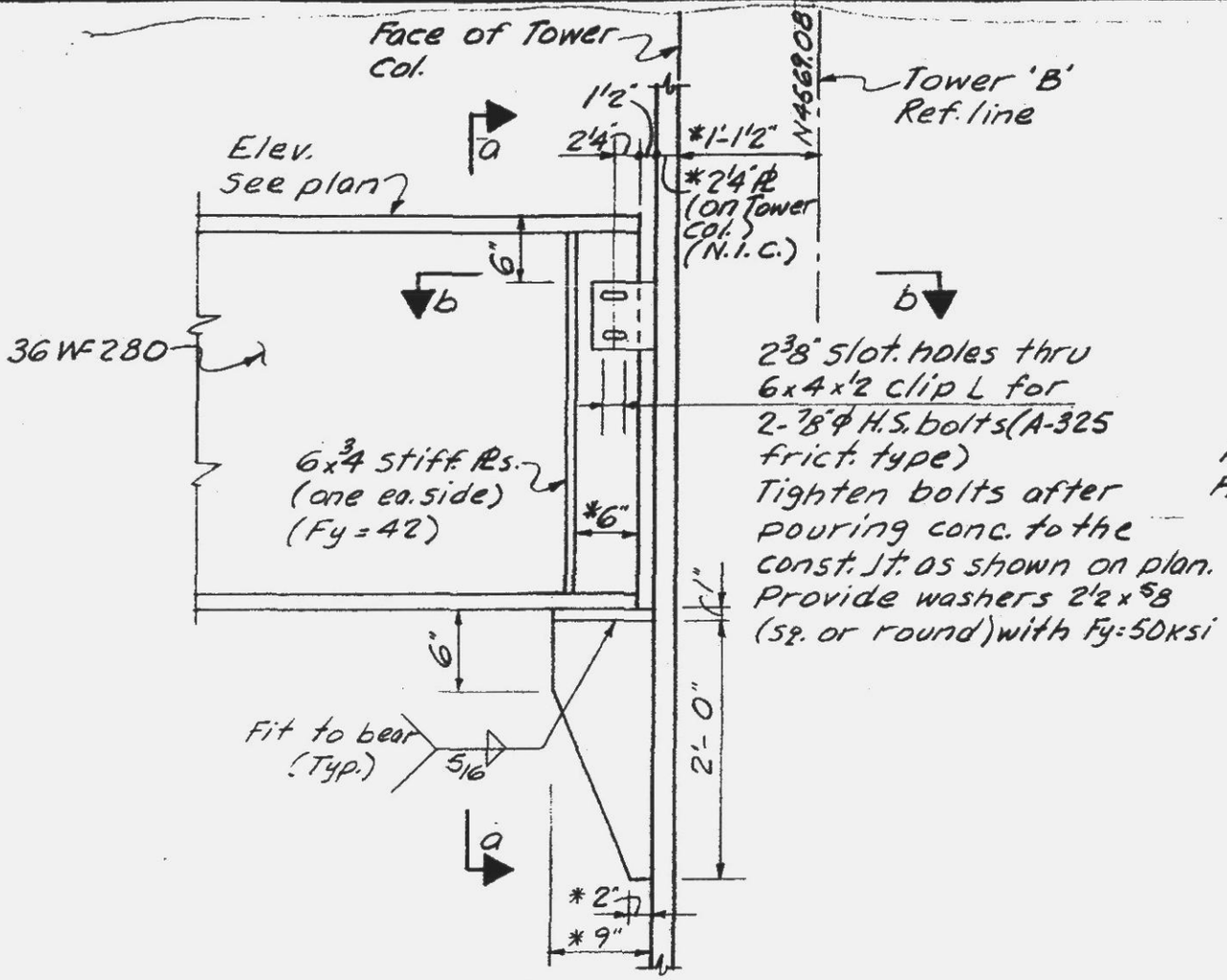

ELEVATION

(All hor. dimensions are measured along ℄ beam passing thru W.P. except as shown with *)

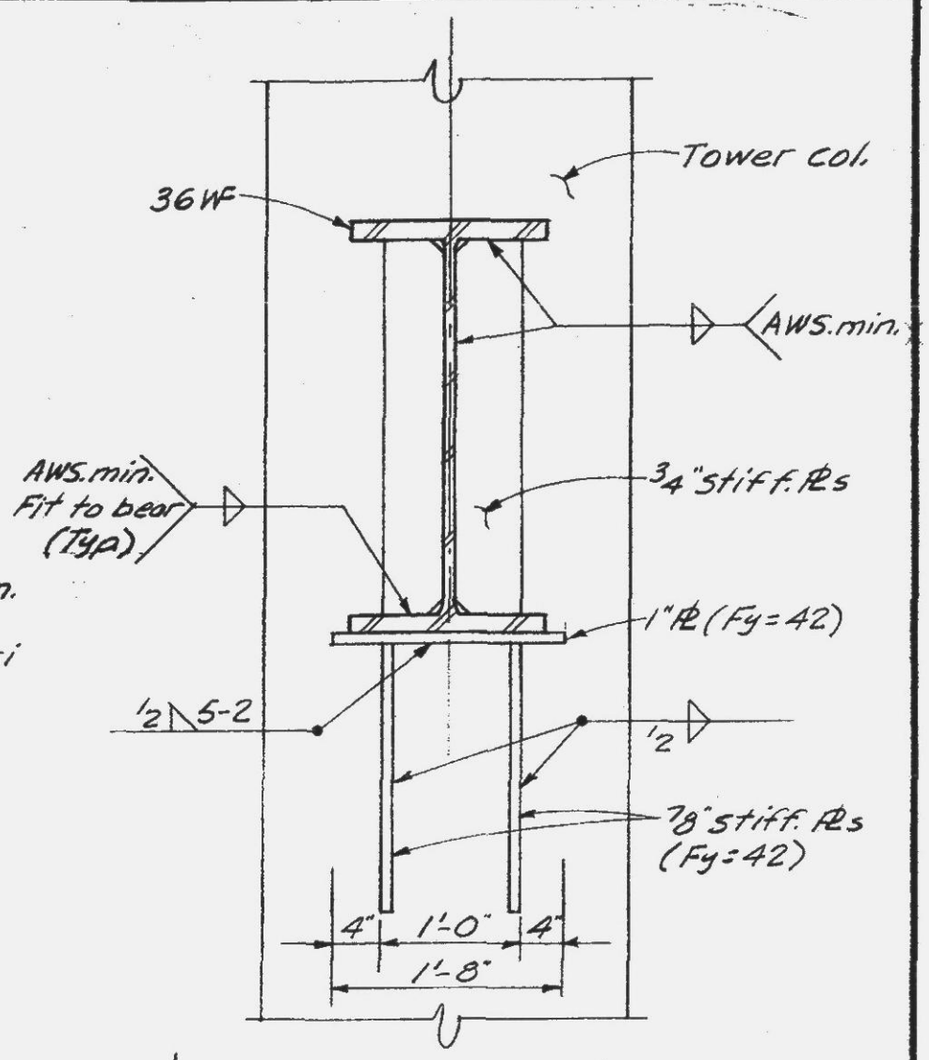

Section a-a

NOTES

1. All welds to be E70xx.

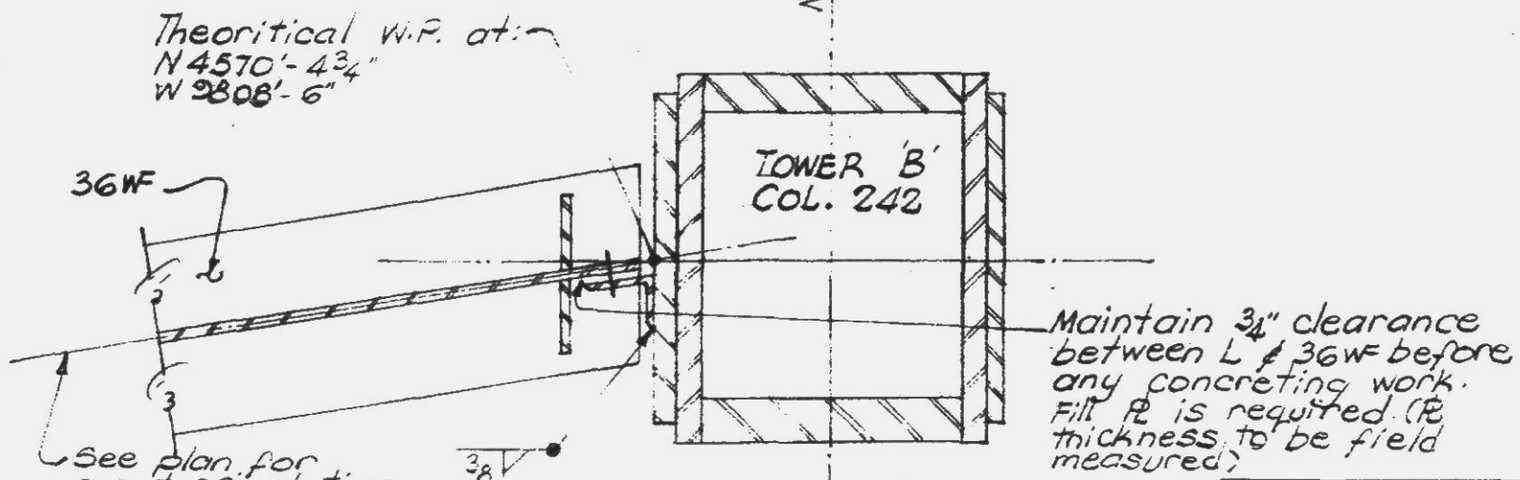

Section b-b

LICENSED PROFESSIONAL ENGINEER — LESLIE E. ROBERTSON — No. 34360 — UNIVERSITY OF THE STATE OF NEW YORK

DESIGNED

DRAWN A.F.

REVIEWED E.L.

12-JK1-130

SKILLING - HELLE - CHRISTIANSEN - ROBERTSON — Structural & Civil Engineers

PROJECT: THE WORLD TRADE CENTER | TITLE: BEAM CONNECTION DETAIL TO W. OF TOWER "B" B101 THRU B116 | DATE: 12-3-68

REVISIONS

3-21-69

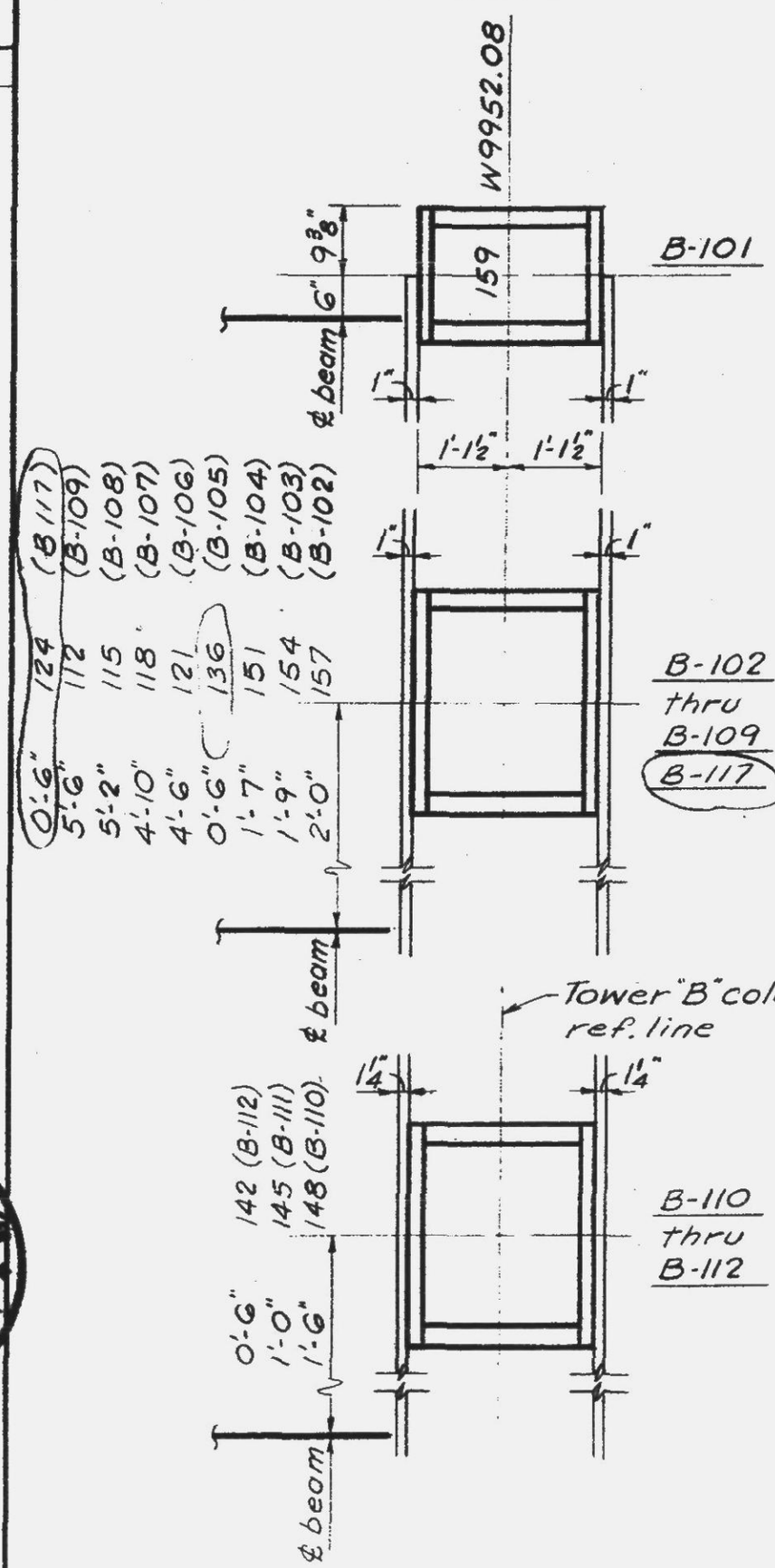

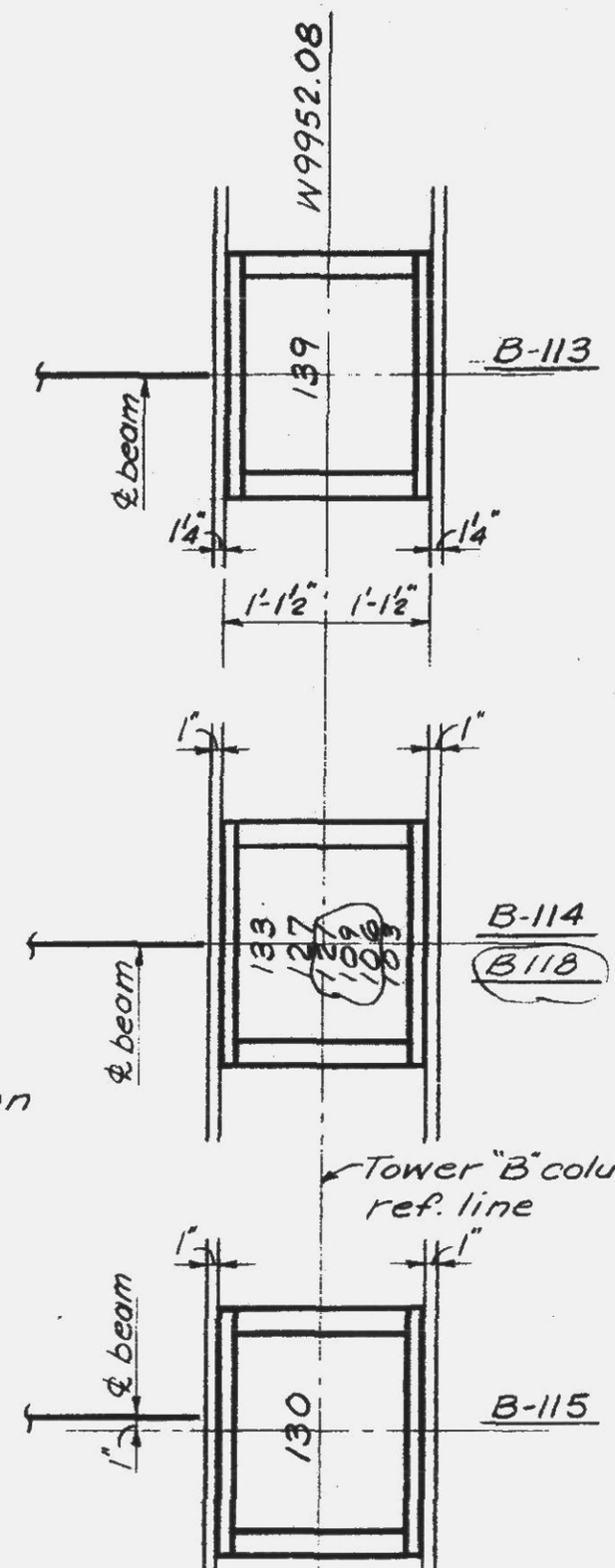

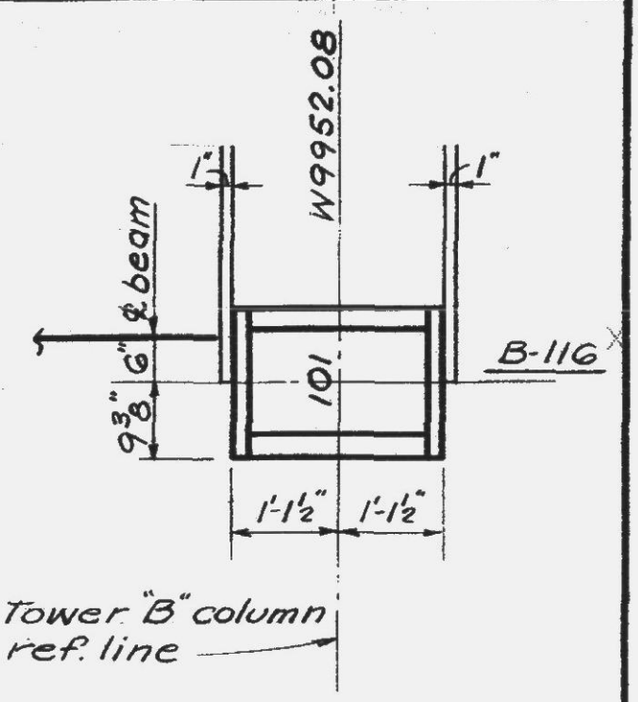

N

Note:
1. See schedule on 12-JK1-136.

LICENSED PROFESSIONAL ENGINEER
LESLIE E. ROBERTSON
No. 34360
UNIVERSITY OF THE STATE OF NEW YORK

DRAWN
S.C

REVIEWED
E.L.

12-JK1-130A

SKILLING - HELLE - CHRISTIANSEN - ROBERTSON — Structural & Civil Engineers

PROJECT: THE WORLD TRADE CENTER

TITLE: BEAM CONNECTION DETAIL TO N. OF TOWER 'B' - B-201 Thru B-207

DATE: 6-7-68

REVISIONS

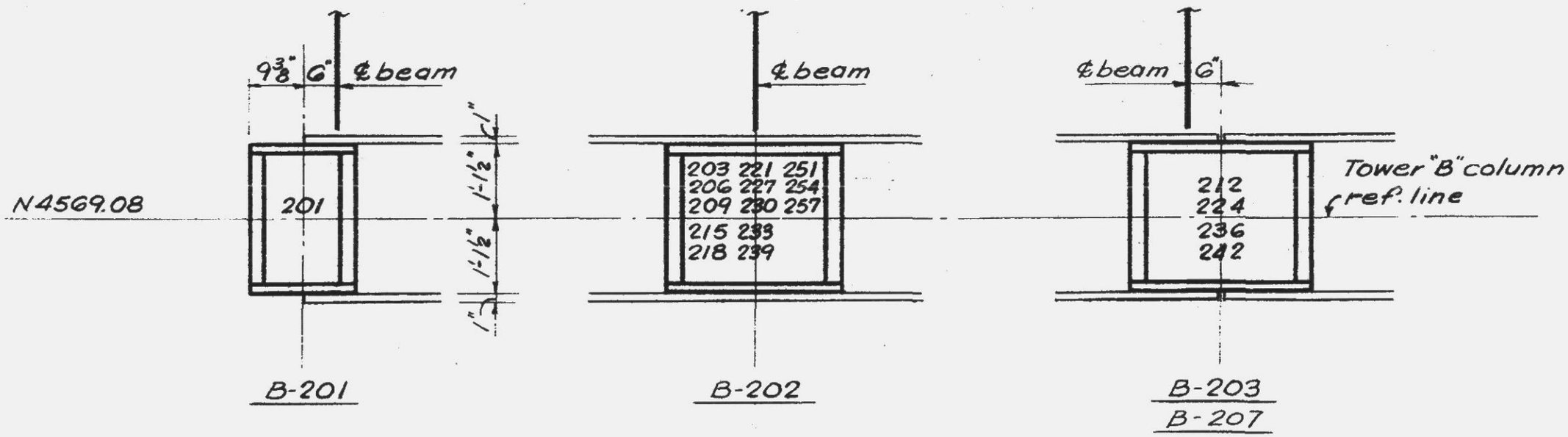

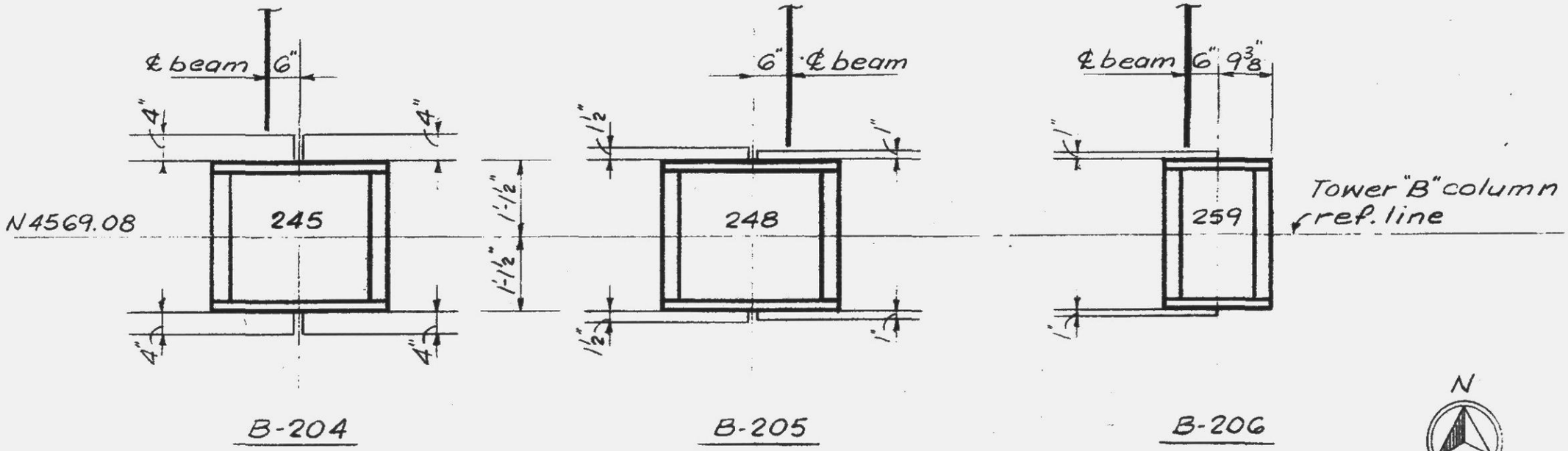

Note:-
1. See schedule on 12-JK1-136

12-JK1-131

LICENSED PROFESSIONAL ENGINEER
LESLIE E. ROBERTSON
No. 34360
UNIVERSITY OF THE STATE OF NEW YORK

SKILLING - HELLE - CHRISTIANSEN - ROBERTSON Structural & Civil Engineers

PROJECT THE WORLD TRADE CENTER | TITLE BEAM CONNECTION DETAIL TO E. OF TOWER 'B' - B-301 thru B-309 | DATE 12-17-68

REVISIONS

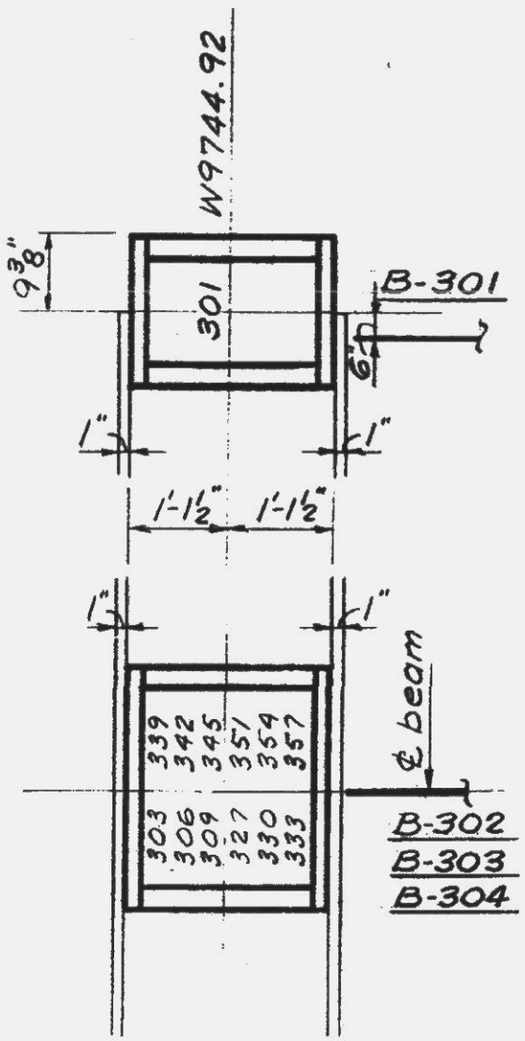

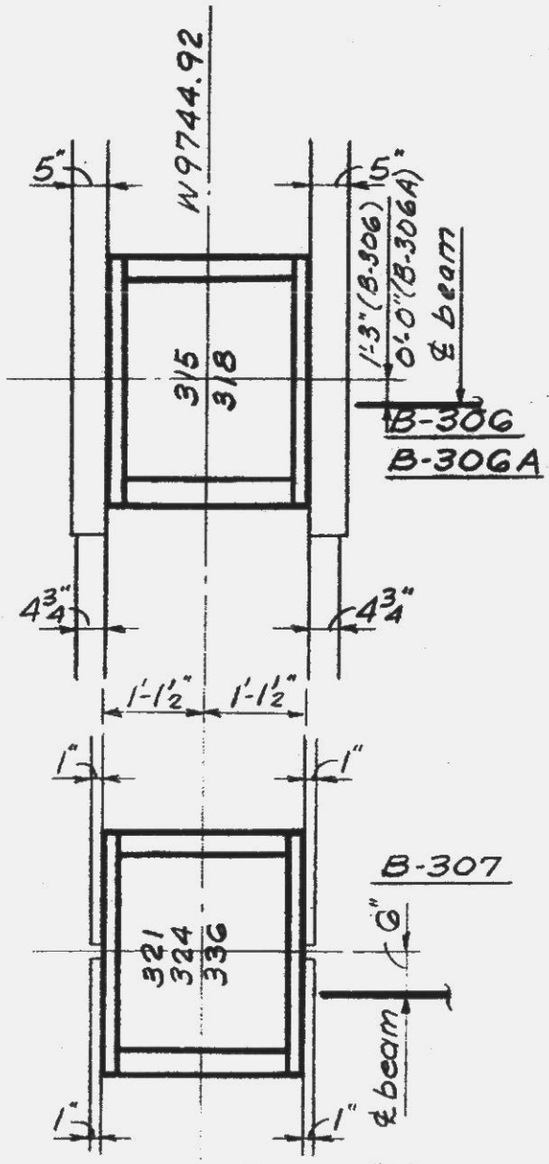

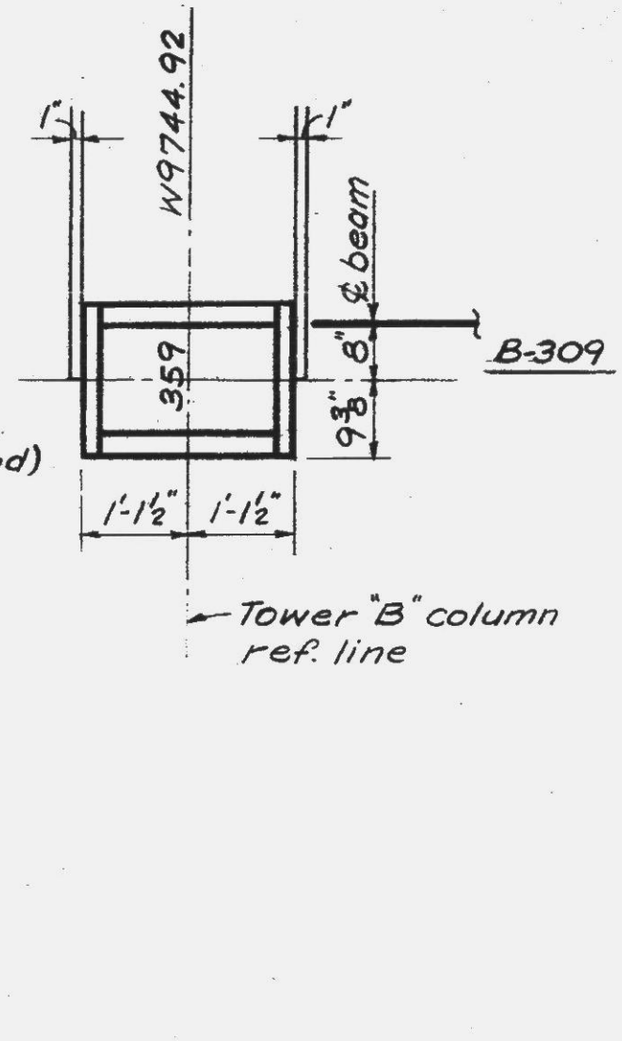

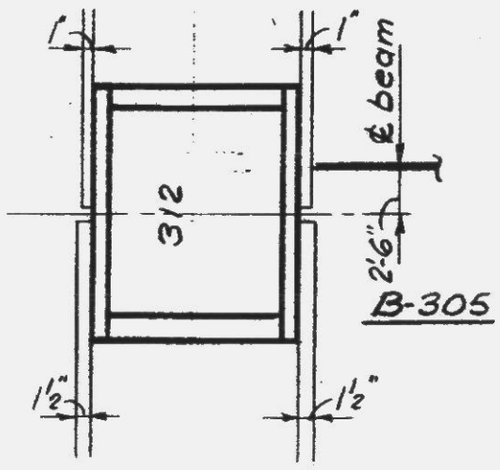

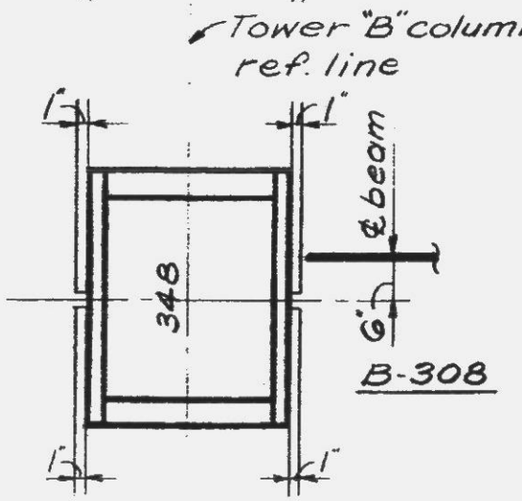

Note:

1. See schedule on 12-JK1-137

12-JK1-132

SKILLING - HELLE - CHRISTIANSEN - ROBERTSON Structural & Civil Engineers

PROJECT THE WORLD TRADE CENTER | TITLE BEAM CONNECTION DETAIL TO S. OF TOWER 'B' B-401 thru B-409 | DATE 6-11-68

REVISIONS

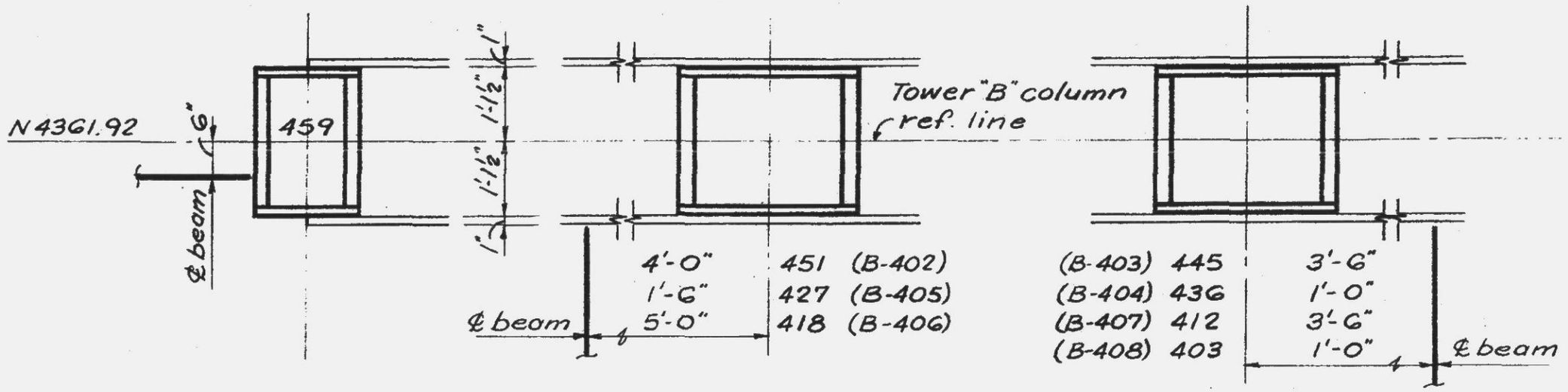

B-401

B-402
B-405
B-406

B-403
B-404
B-407
B-408

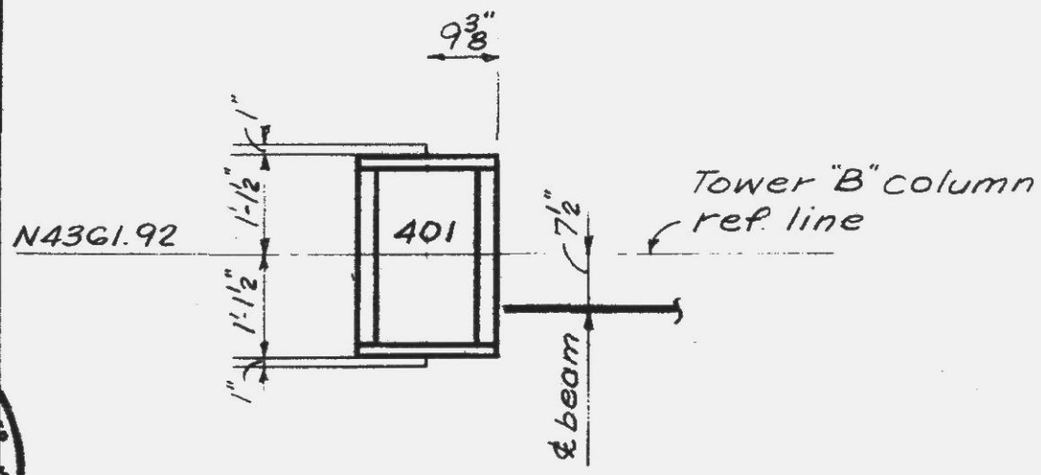

B-409

Note:
1. See schedule on 12-JK1-137

N

LICENSED PROFESSIONAL ENGINEER
LESLIE E. ROBERTSON
No. 34360
UNIVERSITY OF THE STATE OF NEW YORK

12-JK1-133

SKILLING - HELLE - CHRISTIANSEN - ROBERTSON — Structural & Civil Engineers

PROJECT: THE WORLD TRADE CENTER | TITLE: BEAM CONNECTION DETAIL TO TOWER - TYPE D | DATE: 6-11-68

REVISIONS
2-19-69

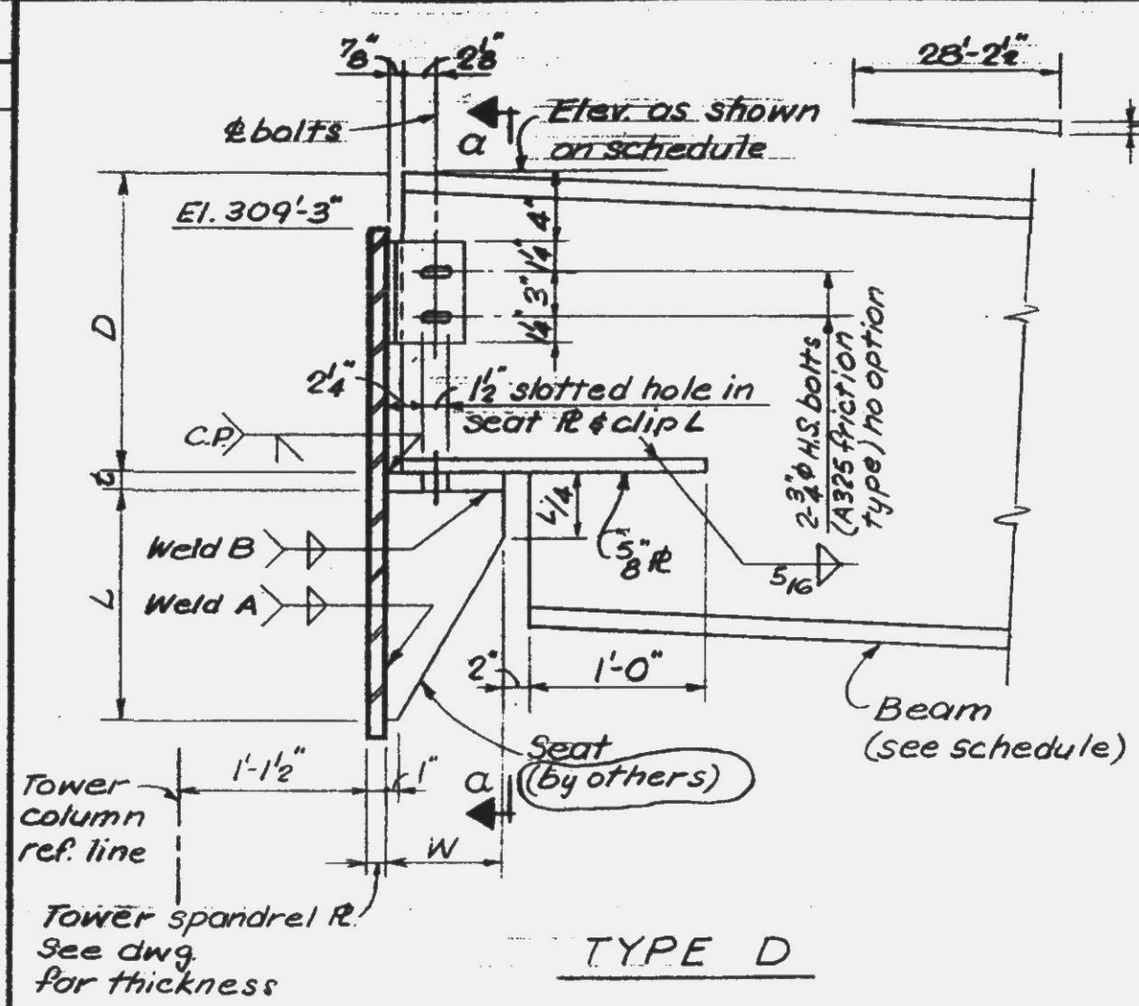

TYPE D

B-402	1'-8"
B-403	1'-6"
B-404	1'-10"
B-405	1'-8¼"
B-406	1'-6"
B-407	1'-6½"
B-408	1'-2½"

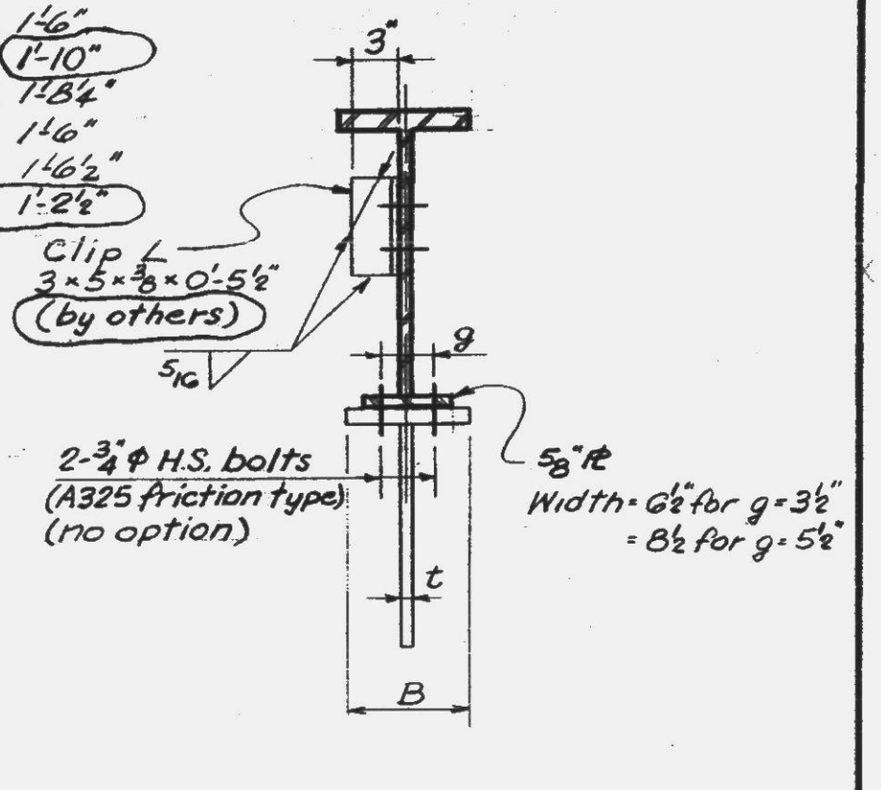

Section a-a

Note:
1. Provide 1¾" × 7/16" washers (Fy = 50 k.s.i.) sq. or round.

LICENSED PROFESSIONAL ENGINEER — LESLIE E. ROBERTSON — No. 34360 — UNIVERSITY OF THE STATE OF NEW YORK

DRAWN S.C.
REVIEWED E.L.

12-JK1-135

SKILLING - HELLE - CHRISTIANSEN - ROBERTSON — Structural & Civil Engineers

PROJECT THE WORLD TRADE CENTER | TITLE SCHEDULE FOR BEAM CONNECTION TO TOWER 'B' | DATE 6-7-68

REVISIONS
12-3-68
2-19-69
3-21-69

DETAIL No.	BEAM			TYPE	CONNECTION								ℓ
					SEAT ℄			STIFFENER ℄			WELD SIZE		
	SIZE	ELEV.	D		W	t	B	W	t	L	A	B	
B-101	16WF36	309'-1"		C	6"	1/2"	6 1/2"	6"	1/2"	12"	5/16"	5/16"	3 1/2"
B-102	↕	↕		C	↕	↕	↕	↕	↕	↕	↕	↕	↕
B-103				C									
B-104				C									
B-105	16WF36			C	6	1/2	6 1/2	6	1/2	12	5/16	5/16	3 1/2
B-106	24WF84		1'-3 7/8"	B	9	3/4	8 1/2	9	3/4	18	1/2	1/2	5 1/2
B-107	16WF36			C	6	1/2	6 1/2	6	1/2	12	5/16	5/16	3 1/2
B-108	16WF36			C	6	1/2	6 1/2	6	1/2	12	5/16	5/16	3 1/2
B-109	30WF190			C	9	1	8 1/2	9	1	22	1/2	1/2	5 1/2
B-110	16WF36			C	6	1/2	6 1/2	6	1/2	12	5/16	5/16	3 1/2
B-111	↕			C	↕	↕	↕	↕	↕	↕	↕	↕	↕
B-112				C									
B-113		309'-1"		C									
B-114	16WF36	308'-9"		C	6	1/2	6 1/2	6	1/2	12	5/16	5/16	3 1/2
B-115	24WF84	308'-9"	0'-11 7/8"	B	9	3/4	8 1/2	9	3/4	18	1/2	1/2	5 1/2
B-116	33WF240	308'-1"	1-10"	B	9	1 1/8	8 1/2	9	1 1/8	22 7/8	5/8	1/2	5 1/2
B-117	16WF36	308'-9"	0'-11 7/8"	B	6	1/2	6 1/2	6	1/2	12	5/16	5/16	3 1/2
B-118	16WF36	309'-1"		C	6	1/2	6 1/2	6	1/2	12	5/16	5/16	3 1/2
B-201	21B44	309'-3"	1'-8 5/8"	B	9	3/4	8 1/2	9	3/4	18	1/2	1/2	5 1/2
B-202	16B31	309'-1"		C	6	1/2	6 1/2	6	1/2	12	5/16	5/16	3 1/2
B-203	21B44	↕	1'-3 7/8"	B	↕	↕	↕	↕	↕	↕	↕	↕	↕
B-204	16WF36			C		↕	↕		↕	↕	↕	↕	↕
B-205	16WF36			C		1/2	6 1/2		1/2	12	↕	↕	3 1/2
B-206	16WF78	↕		C	↕	3/4	8 1/2	↕	3/4	14	5/16	5/16	5 1/2
B-207	16WF58	309'-1"		C	6	3/4	8 1/2	6	3/4	14	3/8	3/8	5 1/2

NOTE:-

1. See dwg. 12-JK1-106 for detail of connection.

LICENSED PROFESSIONAL ENGINEER — LESLIE E. ROBERTSON — No. 34360 — UNIVERSITY OF THE STATE OF NEW YORK

DRAWN S.C.

REVIEWED E.L.

12-JK1-136

SKILLING - HELLE - CHRISTIANSEN - ROBERTSON Structural & Civil Engineers

PROJECT THE WORLD TRADE CENTER | TITLE SCHEDULE FOR BEAM CONNECTION TO TOWER 'B' | DATE 6-11-68

REVISIONS
12-17-68
2-19-69

DETAIL No.	BEAM			CONNECTION									g
				TYPE	SEAT ℄			STIFFENER ℄			WELD SIZE		
	SIZE	ELEV.	D		W	t	B	W	t	L	A	B	
B-301	16WF36	309'-1"		C	6"	1/2"	6 1/2"	6"	1/2"	12"	5/16"	5/16"	3 1/2"
B-302	36WF300	309'-1"	2'-0"	B	8	3/4	8 1/2	8	3/4	18	3/8	3/8	5 1/2
B-303	16WF36	309'-1"		C	6	1/2	6 1/2	6	1/2	12	5/16	5/16	3 1/2
B-304	↑	308'-9"		C	↑	↑	↑	↑	↑	↑	↑	↑	↑
B-305		309'-1"		C									
B-306		↑		C									
B-306A				C									
B-307		↓		C									
B-308	↓	309'-1"		C	↓	↓	↓	↓	↓	↓	↓	↓	↓
B-309	16WF36	308'-9"		C	6	1/2	6 1/2	6	1/2	12	5/16	5/16	3 1/2
B-401	36WF230	308'-1"	2'-2"	B	9	1	8 1/2	9	1	22	1/2	1/2	5 1/2
B-402	36WF260	N. 308'-1" S. 306'-5"	1'-9"	D	↑	1 1/16	↑	↑	1 1/16	24	5/8	5/8	↑
B-403	↑	N. 308'-1" S. 306'-7"	↑	D		↑			↑	↑	↑	↑	
B-404		N. 308'-6" S. 306'-8"		D									
B-405		N. 308'-6" S. 306'-9 3/4"		D									
B-406		N. 308'-6" S. 307'-0"		D								1/2	
B-407	↓	N. 308'-9" S. 307'-2 1/2"	↓	D	↓	↓	↓	↓	↓	↓	↓	↓	↓
B-408	36WF260	N. 308'-9" S. 307'-6 1/2"	1'-9"	D	9	1 1/16	8 1/2	9	1 1/16	24	5/8	5/8	5 1/2
B-409	18WF50	308'-9"		C	7	1/2	6 1/2	7	1/2	14	5/16	5/16	3 1/2

NOTES:-

1. N.— Elevation at North end of beam along face of tower spandrel ℄.
   S.— Elevation at South end of beam along line (58).
2. See dwg. 12-JK1-106 & 135 for detail of connection.

LICENSED PROFESSIONAL ENGINEER — LESLIE E. ROBERTSON — No. 34360 — UNIVERSITY OF THE STATE OF NEW YORK

DRAWN S.C.

REVIEWED E.L.

12-JK1-137

SKILLING, HELLE, CHRISTIANSEN, ROBERTSON — Structural & Civil Engineers

PROJECT: THE WORLD TRADE CENTER | TITLE: BRACKET SUPPORT AT EXT. FACE OF TOWER | DATE: 9-13-68

REVISIONS

	BRACKET SIZE	Fy	LOCATION		ELEV.	WELD 'a'	REMARKS
1	L8x6x1x2'0"	36	WA	N4707'-1"	307'-5"	5/16"	
2	↑	↑	↑	N4712'-6"	↕	↑	
3				N4722'-6"			
4				N4732'-6"			
5				N4741'-3"	307'-5"		
6				N4752'-6"	307'-11"		
7				N4762'-6"	↕		
8				N4781'-3"			
9				N4792'-6"			
10				N4802'-6"			
11				N4812'-6"	↕		
12				N4821'-3"	307'-11"		
13				N4832'-6"	308'-1"		
14				N4842'-6"	↕		
15				N4852'-6"			
16				N4863'-9"	↕		
17	↓	↓	↓	N4872'-6"	308'-1"	↓	
18	L8x6x1x2'0"	36	WA	N4892'-6"	308'-3"	5/16"	

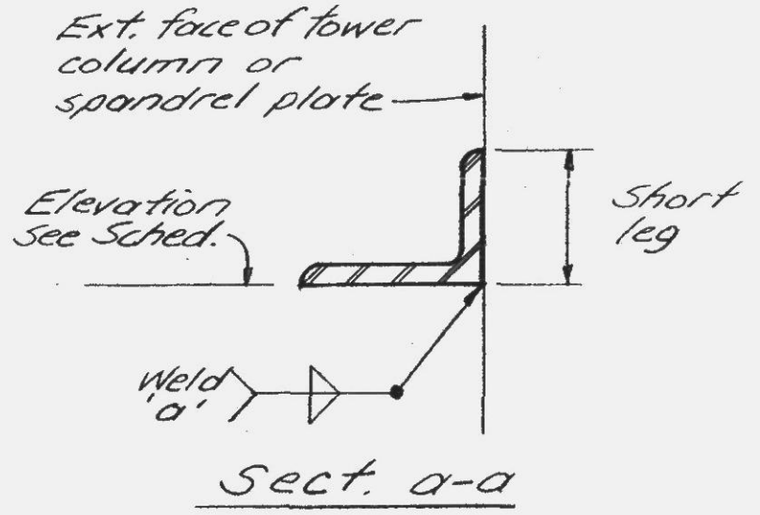

Sect. a-a

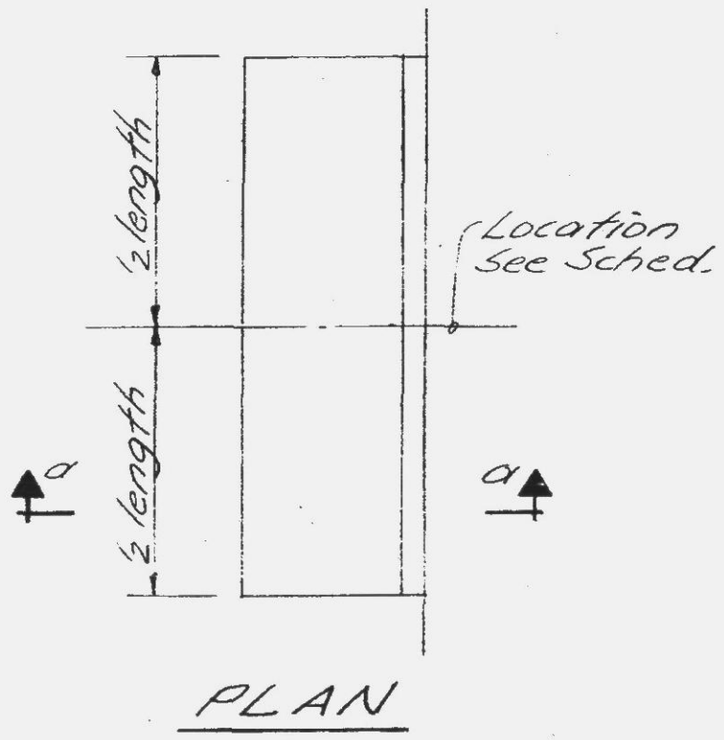

PLAN

NOTES:
1. All welding to be E70XX.
2. * — Longer leg of L vertical.
3. Notations:
   N - North face of tower A - Tower 'A'
   S - South " " " B - Tower 'B'
   E - East " " "
   W - West " " "
   Example: WA means West face of Tower 'A'

LICENSED PROFESSIONAL ENGINEER — LESLIE E. ROBERTSON — No. 34360 — UNIVERSITY OF THE STATE OF NEW YORK

DESIGNED

DRAWN

REVIEWED

12-JK1-138

SKILLING, HELLE, CHRISTIANSEN, ROBERTSON — Structural & Civil Engineers

PROJECT THE WORLD TRADE CENTER | TITLE BEAM CONNECTION TO TOWER 'B' | DATE 12-3-68

REVISIONS

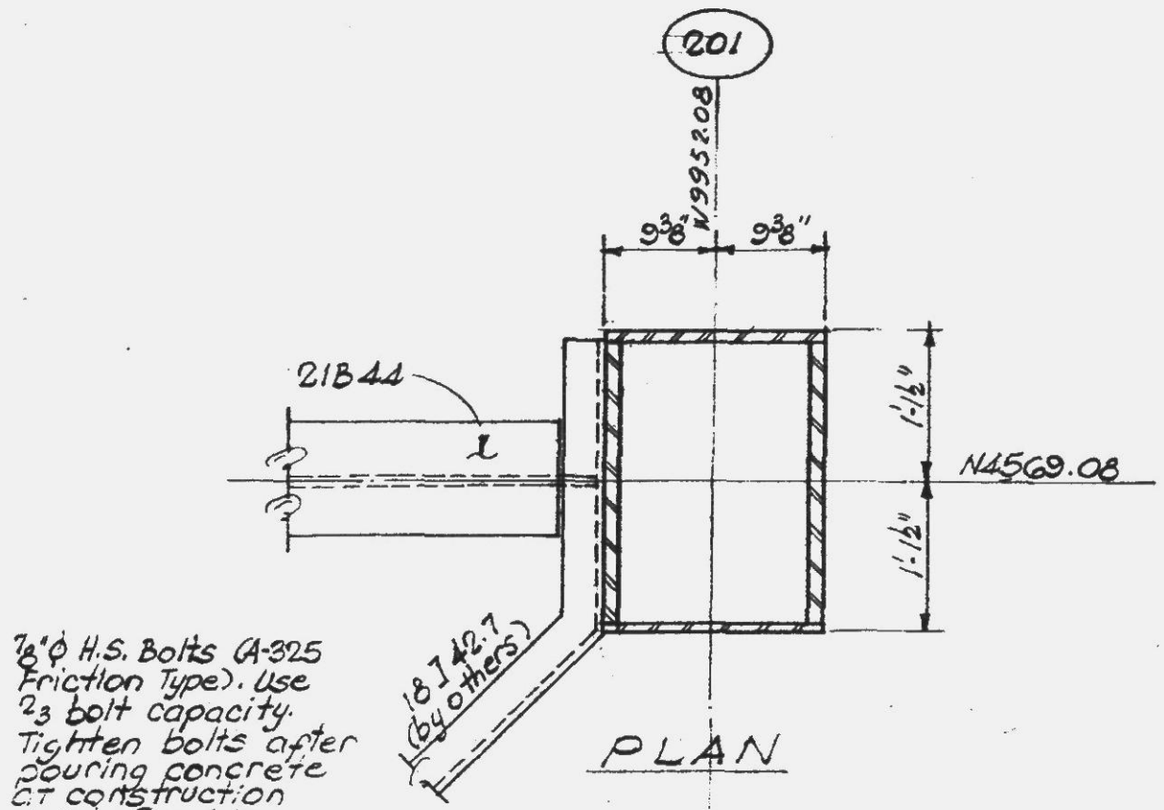

7/8"ϕ H.S. Bolts (A-325 Friction Type). Use 2/3 bolt capacity. Tighten bolts after pouring concrete at construction joint. Provide washers 1¾ × 7/16" (square or round) with Fy=50

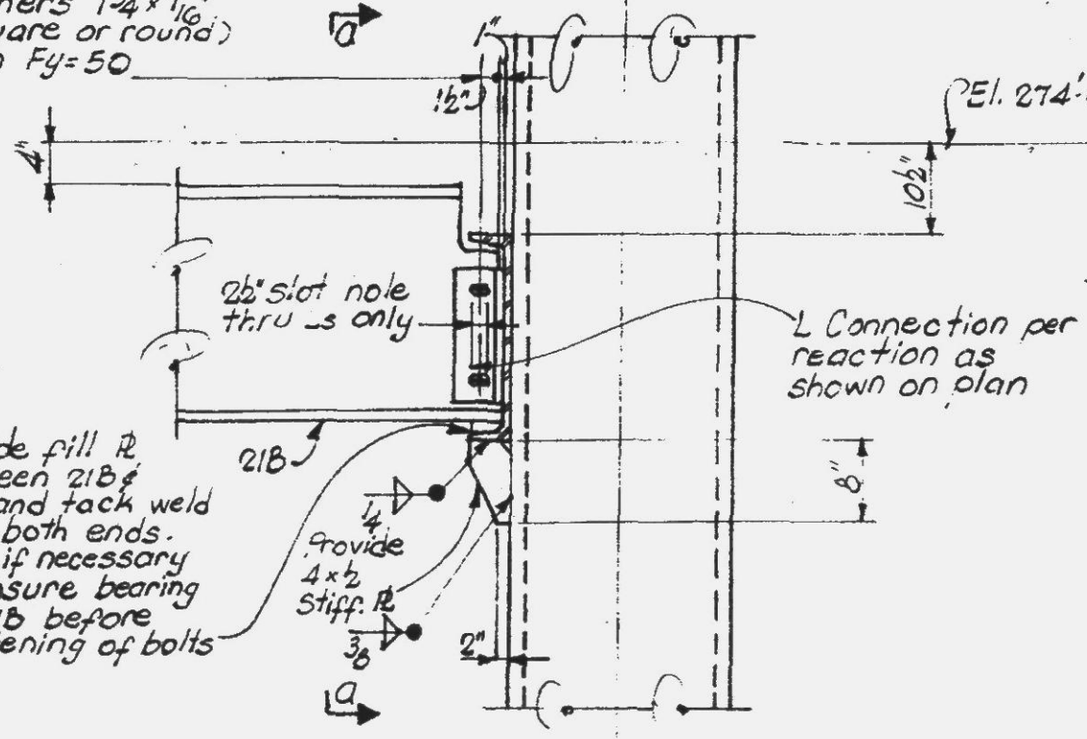

Provide fill Pl between 21B & 18 I and tack weld to I both ends. Shim if necessary to insure bearing of 21B before tightening of bolts

ELEVATION

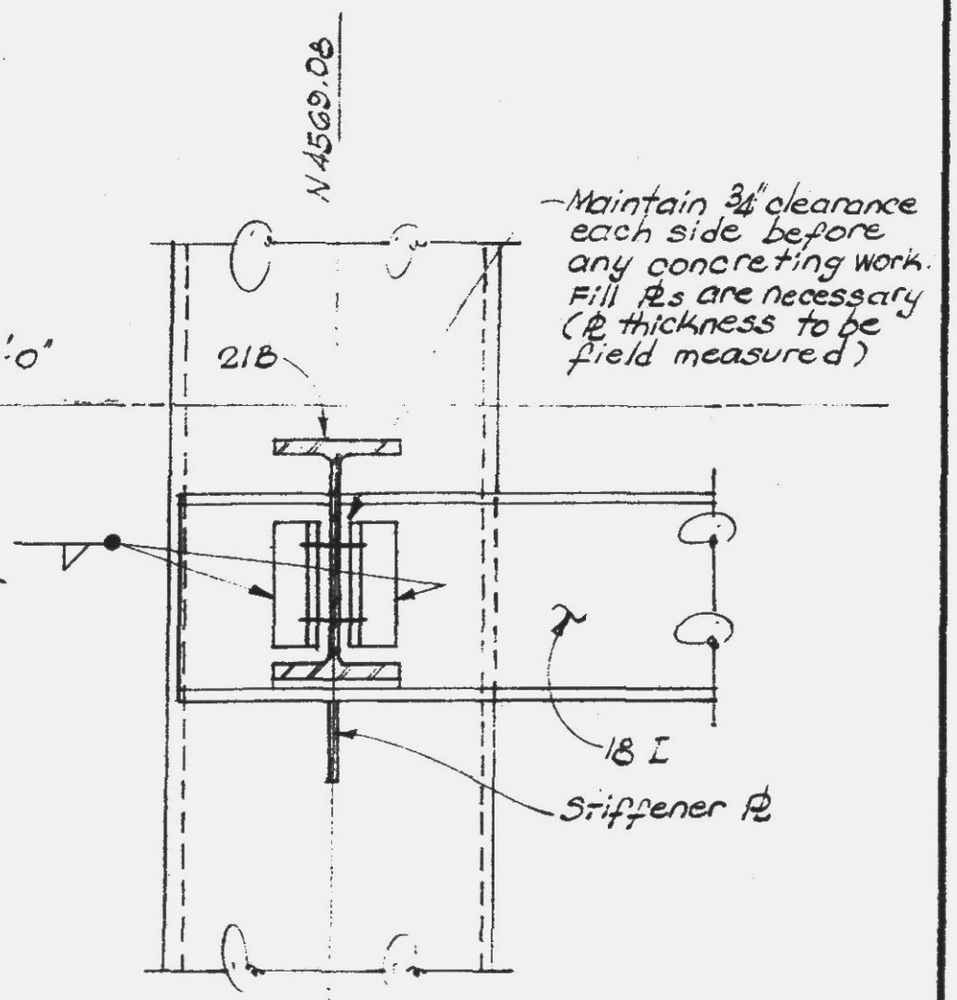

Section a-a

LICENSED PROFESSIONAL ENGINEER
LESLIE E. ROBERTSON
No. 34360
UNIVERSITY OF THE STATE OF NEW YORK

DESIGNED

DRAWN

REVIEWED

12-JKI-139

SKILLING, HELLE, CHRISTIANSEN, ROBERTSON — Structural & Civil Engineers

PROJECT: THE WORLD TRADE CENTER — TITLE: BRACKET DETAIL — DATE: 10-15-68

REVISIONS

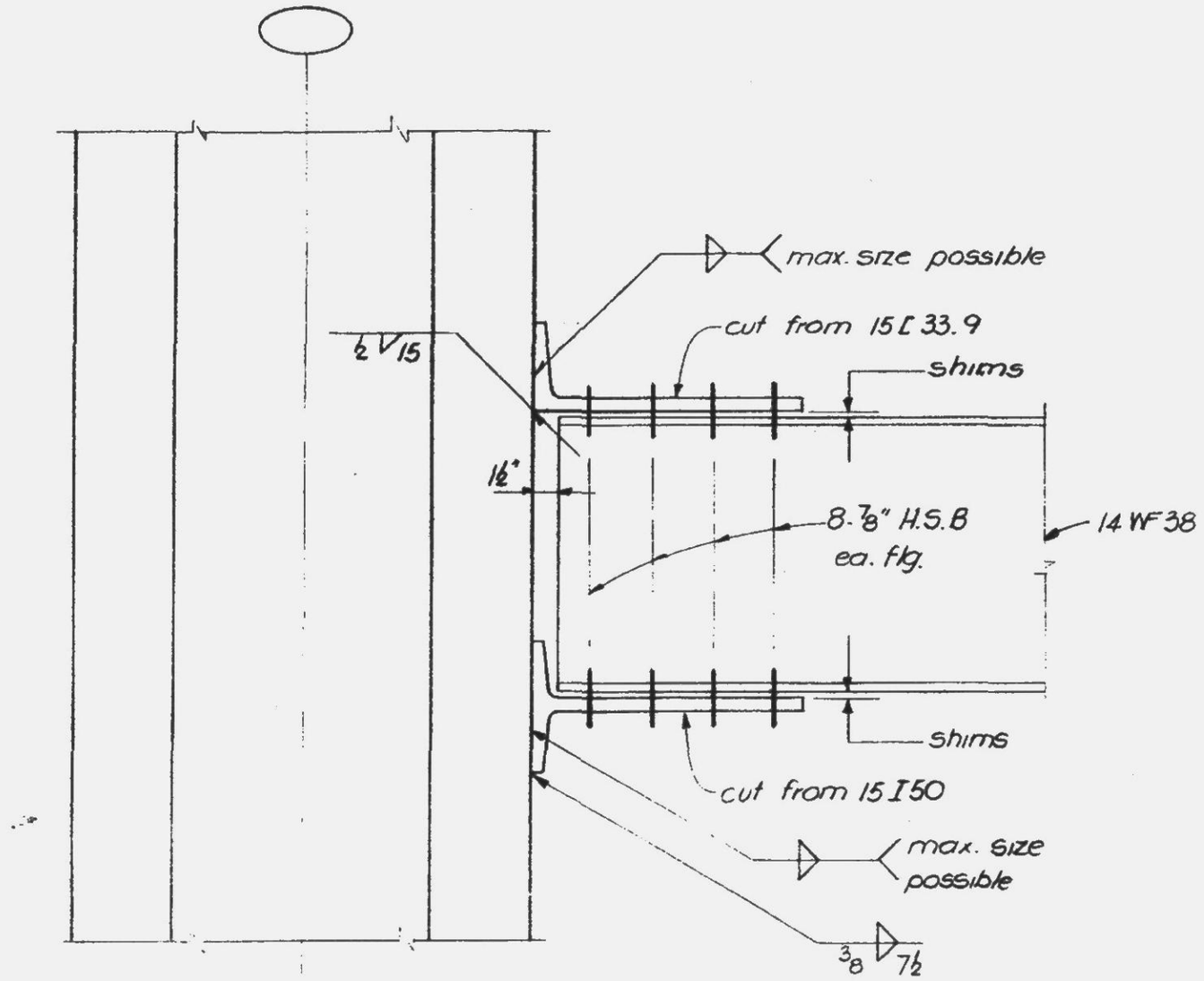

LICENSED PROFESSIONAL ENGINEER — LESLIE E. ROBERTSON — NEW YORK

DESIGNED

DRAWN

G.H.

REVIEWED

12-JK1-170

SKILLING, HELLE, CHRISTIANSEN, ROBERTSON — Structural & Civil Engineers

PROJECT THE WORLD TRADE CENTER | TITLE BRACKET DETAIL | DATE 10-15-68

REVISIONS

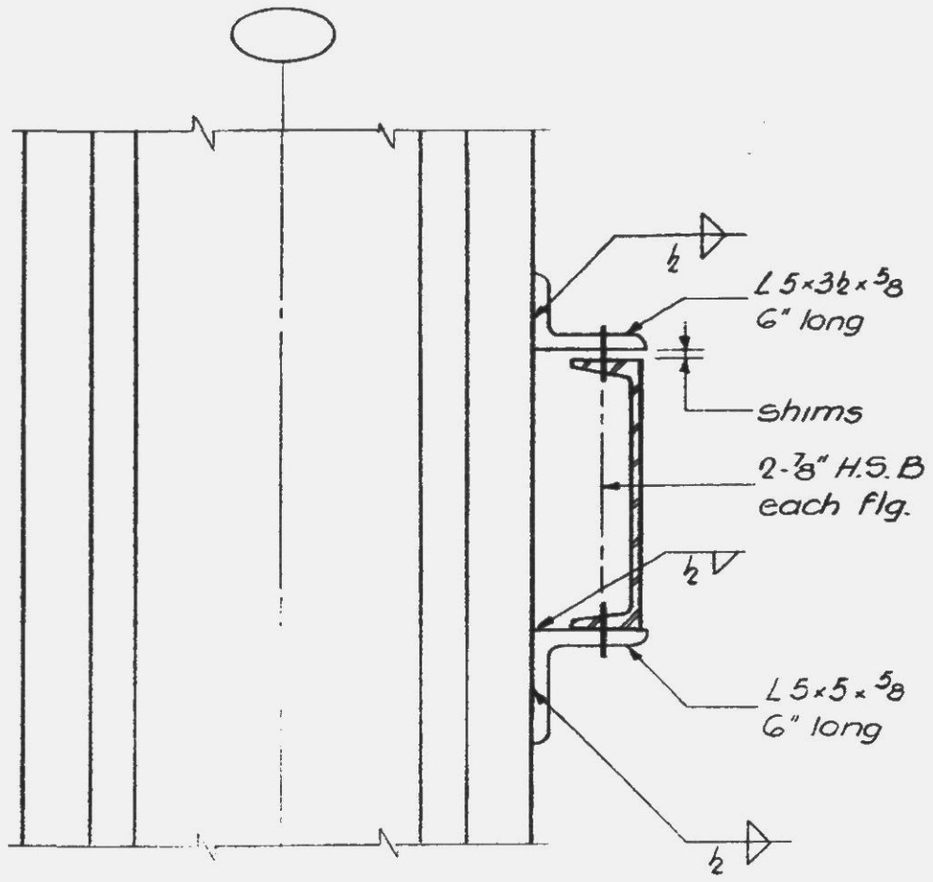

Detail A

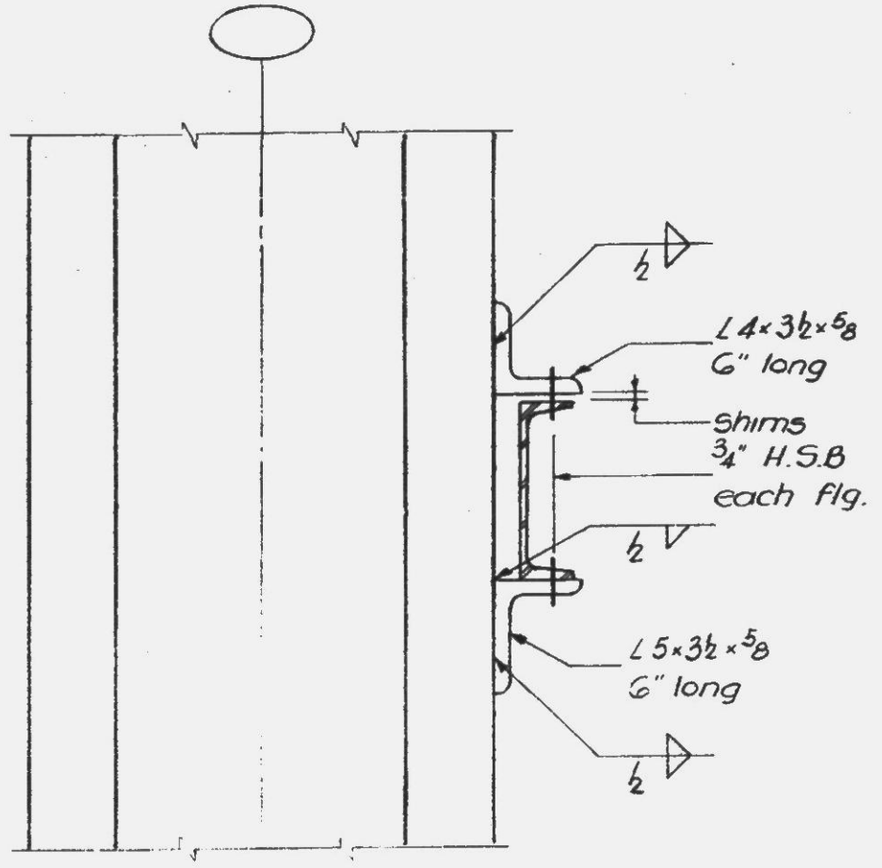

Detail B

LICENSED PROFESSIONAL ENGINEER
LESLIE E. ROBERTSON
No. 34360
UNIVERSITY OF THE STATE OF NEW YORK

DESIGNED

DRAWN

S.H.

REVIEWED

12-JK1-171

SKILLING, HELLE, CHRISTIANSEN, ROBERTSON — Structural & Civil Engineers

PROJECT: THE WORLD TRADE CENTER | TITLE: BRACKET DETAIL | DATE: 10-15-68

REVISIONS

5-29-69

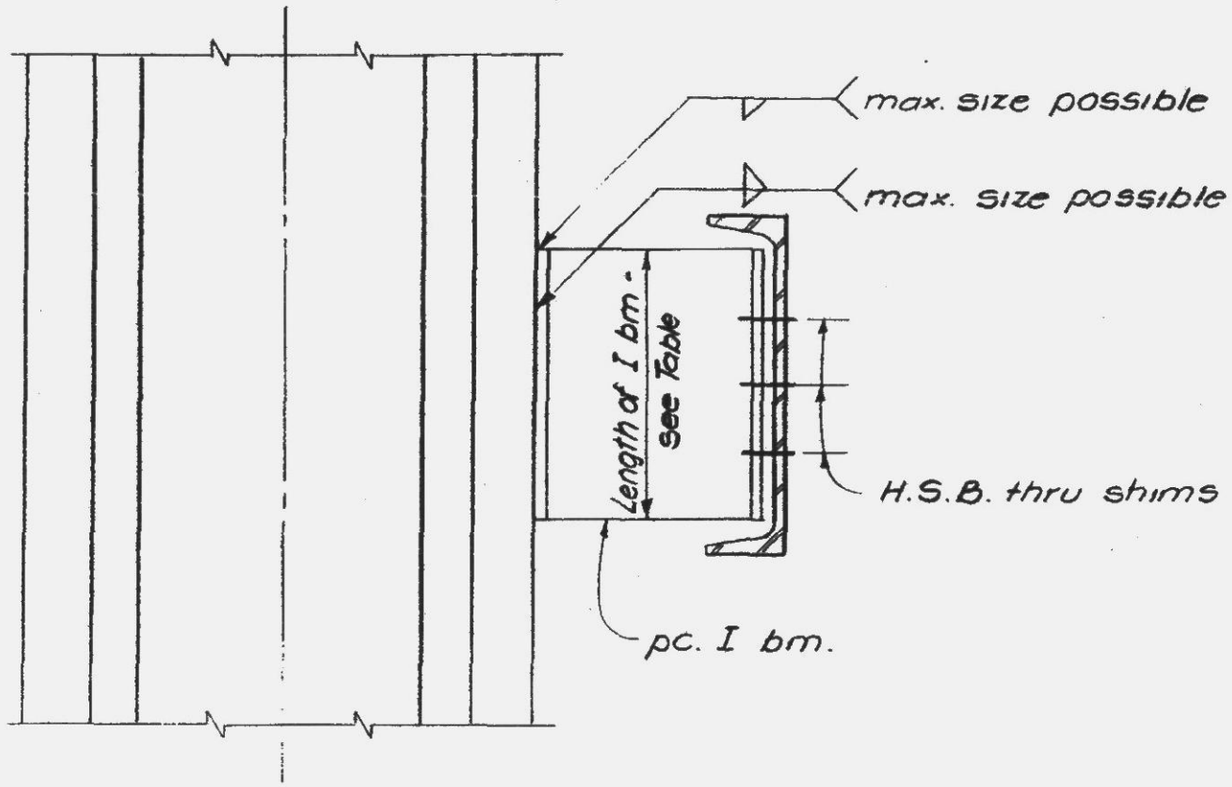

COL.	SIZE OF BRACKET	LENGTH OF BRACKET	NO. & SIZE OF H.S. BOLTS
K35-6	10 I 35	1'-0"	8-$\frac{3}{4}$" ϕ
K37-5	10 I 35	0'-10"	6-$\frac{3}{4}$" ϕ
K37-7	12 I 50	0'-10"	6-$\frac{3}{4}$" ϕ

LICENSED PROFESSIONAL ENGINEER — LESLIE E. ROBERTSON — No. 34360 — UNIVERSITY OF THE STATE OF NEW YORK

DESIGNED

DRAWN: G.H.

REVIEWED: E.L.

12-JKI-172

Civil & Structural Engineers

PROJECT THE WORLD TRADE CENTER | TITLE TYPICAL BEAM DETAILS | DATE 5-15-67

REVISIONS
10-20-67
6-7-68
7-19-68

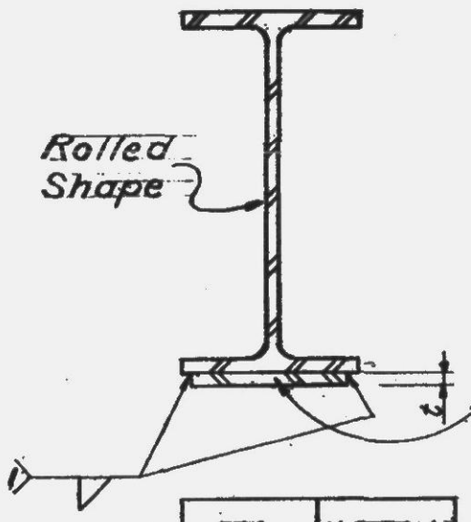

Note 1:
Cover ℄ - See plan for size & length.

"t"	Weld 1
3/8	1/4
7/16	1/4
1/2	1/4
9/16	5/16
5/8	5/16
11/16	5/16
3/4	5/16
13/16	5/16
7/8	5/16
15/16	5/16
1	5/16
1 1/4	3/8
1 1/2	3/8
1 3/4	3/8
2	1/2

TYPE 2

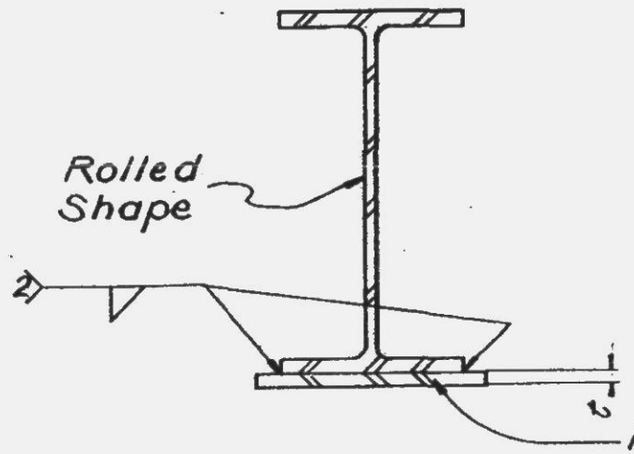

Note 1

"t"	Weld 2
3/8	1/4
7/16	1/4
1/2	1/4
9/16	5/16
5/8	5/16
11/16	5/16
3/4	5/16
13/16	5/16
7/8	5/16
15/16	5/16
1	5/16
1 1/4	3/8
1 1/2	3/8
1 3/4	3/8
2	1/2

TYPE 3

Notes:
1. Where 2 cover ℄s are used, thicker ℄ to be welded to Rolled Shape. Use "t" of thicker ℄ to figure weld size BTW. ℄s (but not greater than thickness of thinner ℄)

LICENSED PROFESSIONAL ENGINEER
LESLIE E. ROBERTSON
No. 34360
STATE OF NEW YORK

12-JK2-2

WORTHINGTON, SKILLING, HELLE & JACKSON — Civil & Structural Engineers

PROJECT: TYPICAL TRADE CENTER | TITLE: TYPICAL BEAM DETAIL | DATE: 5-15-67

REVISIONS
10-20-67
7-19-68

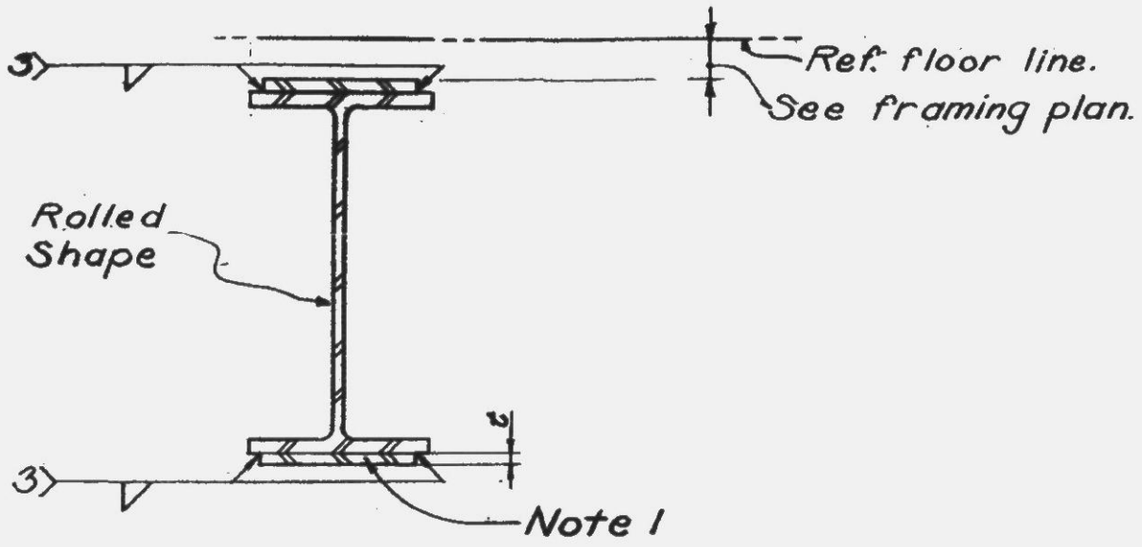

"t"	Weld 3
3/8	1/4
7/16	1/4
1/2	1/4
9/16	5/16
5/8	5/16
11/16	5/16
3/4	5/16
13/16	5/16
7/8	5/16
15/16	5/16
1	5/16
1 1/4	3/8
1 1/2	3/8
1 3/4	3/8
2	1/2

TYPE 4

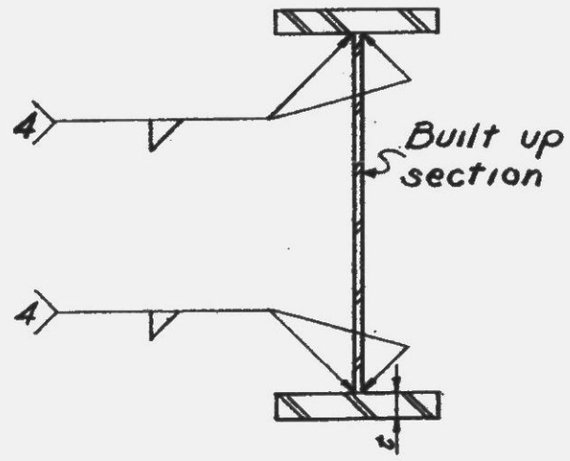

"t"	Weld 4
3/4	1/4
7/8	5/16
1	5/16
1 1/8	5/16
1 1/4	5/16
1 3/8	5/16
1 1/2	5/16
1 5/8	3/8
1 3/4	3/8
1 7/8	3/8
2	3/8
2 1/4	3/8
2 1/2	1/2
2 3/4	1/2
3	1/2
3 1/4	1/2
3 1/2 or over	1/2

TYPE 5

Notes:
1. Where 2 cover Pls are used, thicker Pl to be welded to Rolled Shape. Use "t" of thicker Pl to figure weld size BTW. Pls (but not greater than thickness of thinner Pl)

LICENSED PROFESSIONAL ENGINEER
LESLIE E. ROBERTSON
No. 34360
OF THE STATE OF NEW YORK

12-JK2-3

WORTHINGTON, SKILLING, HELLE & JACKSON — Civil & Structural Engineers

PROJECT	TITLE	DATE
THE WORLD TRADE CENTER	TYPICAL BEAM DETAILS	5 - 15 - 67

REVISIONS

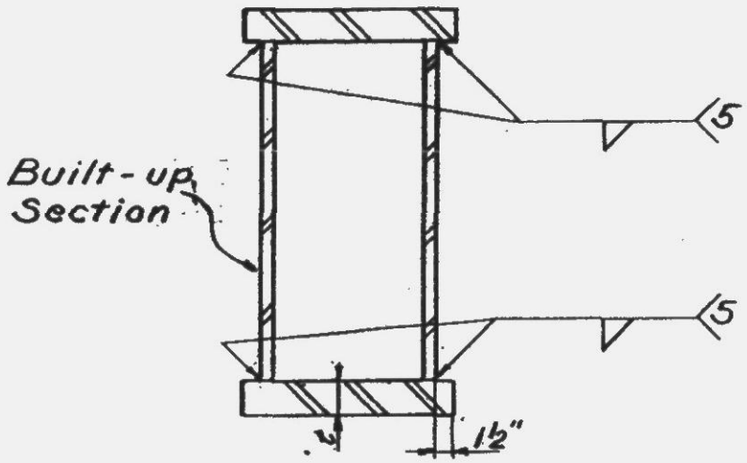

"t"	WELD 5
3/4	1/4
7/8	5/16
1	5/16
1 1/8	5/16
1 1/4	5/16
1 3/8	5/16
1 1/2	5/16
1 5/8	3/8
1 3/4	3/8
1 7/8	3/8
2	3/8
2 1/4	3/8
2 1/2	1/2
2 3/4	1/2
3	1/2
3 1/4	1/2
3 1/2 or over	1/2

TYPE 6

LICENSED PROFESSIONAL ENGINEER
LESLIE E. ROBERTSON
No. 34360
OF THE STATE OF NEW YORK

12 - JK2 - 4

SKILLING – HELLE – CHRISTIANSEN – ROBERTSON — Structural & Civil Engineers

PROJECT: THE WORLD TRADE CENTER | TITLE: TYPICAL BEAM DETAILS | DATE: 5-15-67

REVISIONS
6-5-67
11-8-67
Gen. revisions
7-19-68

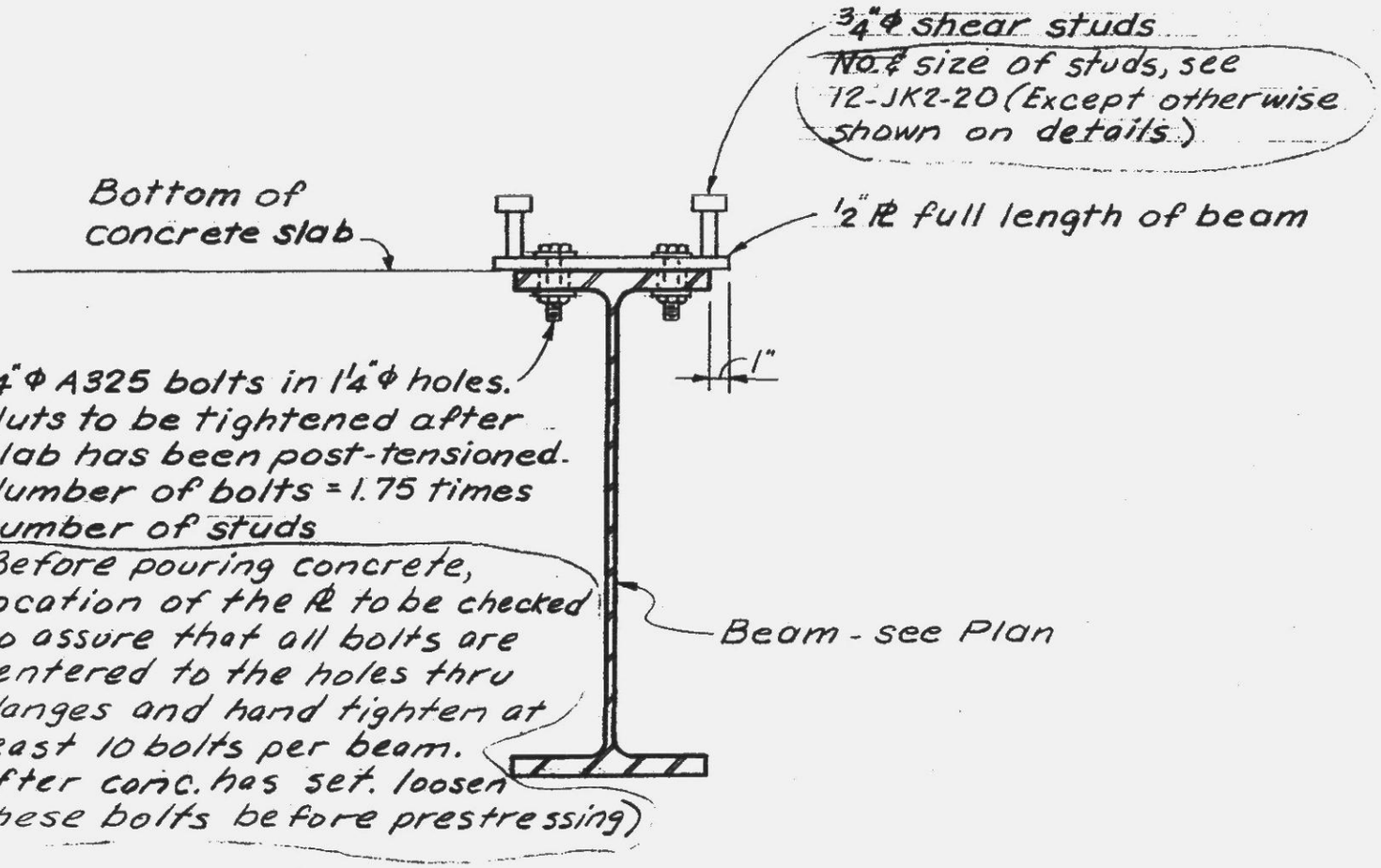

TYPE 7 (Typical all beams at El. 264' except otherwise shown on details)

NOTE:
All shear studs shall be installed on 1/2" PL only.
All washers provided should be 1 3/4 × 7/16 (square or round) with a yield stress of 50 ksi.

LICENSED PROFESSIONAL ENGINEER
LESLIE E. ROBERTSON
No. 3882
UNIVERSITY OF THE STATE OF NEW YORK

12-JK2-5

SKILLING, HELLE, CHRISTIANSEN, ROBERTSON — Structural & Civil Engineers

PROJECT THE WORLD TRADE CENTER | TITLE | DATE 7-19-68

REVISIONS

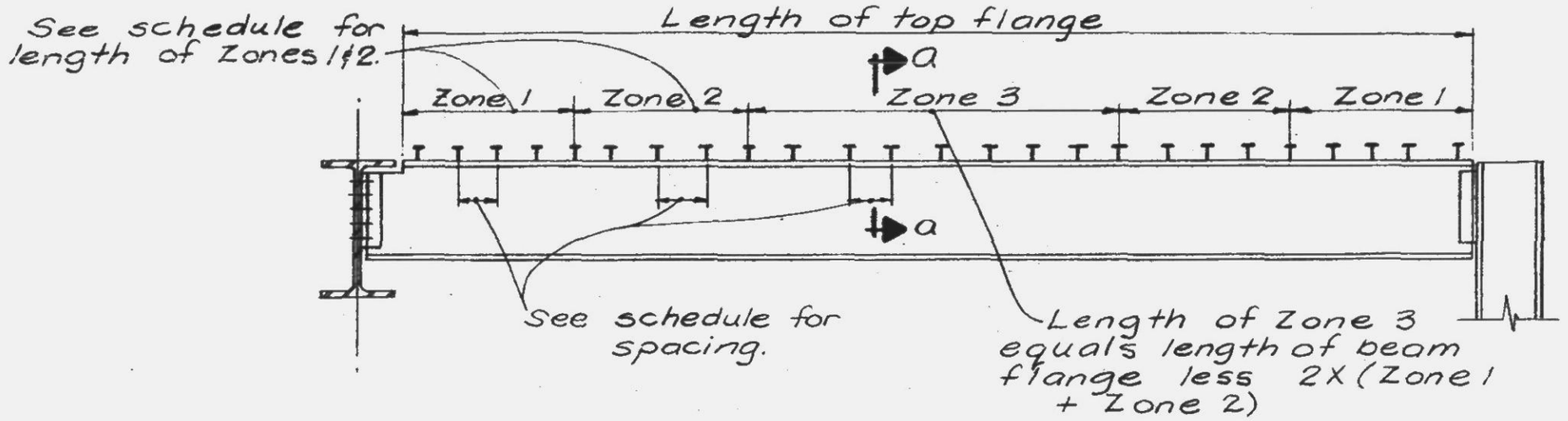

ELEVATION

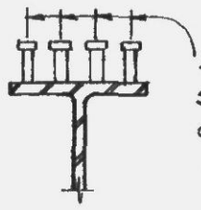

SECTION a-a

Notes:

1. Length of beam may be such that Zone 3 does not exist and Zones 2 overlap.

DESIGNED

DRAWN

REVIEWED

12-JK2-8

REVISIONS

TRAFFIC CENTER | SCHEDULE FOR SHEAR CONNECTORS

Schedule "A"

Beam No.	Stud Size	No. Of Rows		Zone 1	Zone 2	Zone 3
1	$\frac{3}{4}\phi \times 3"$	4	Length	4'-0"	4'-0"	
			Spacing	$3\frac{3}{4}$"	$3\frac{3}{4}$"	$4\frac{5}{8}$"
2	$\frac{3}{4}\phi \times 3"$	2	Length	4'-0"	4'-0"	
			Spacing	3¼"	3¼"	4"
3	$\frac{7}{8}\phi \times 3\frac{1}{2}"$	2	Length	4'-0"	4'-0"	
			Spacing	3"	4¼"	$5\frac{3}{4}$"
4	$\frac{7}{8}\phi \times 3\frac{1}{2}"$	2	Length	4'-0"	4'-0"	
			Spacing	3"	4¼"	6½"
5	$\frac{7}{8}\phi \times 3\frac{1}{2}"$	4	Length	5'-0"	5'-0"	
			Spacing	3¼"	$3\frac{3}{4}$"	$7\frac{3}{4}$"
6	$\frac{7}{8}\phi \times 3\frac{1}{2}"$	2	Length	5'-0"	5'-0"	
			Spacing	3"	4¼"	8¼"
7	$\frac{7}{8}\phi \times 3\frac{1}{2}"$	4	Length	5'-0"	5'-0"	
			Spacing	4"	$4\frac{3}{4}$"	6
8	$\frac{7}{8}\phi \times 3\frac{1}{2}"$	2	Length	5'-0"	5'-0"	
			Spacing	3½"	4½"	5½"
9	$\frac{7}{8}\phi \times 3\frac{1}{2}"$	4 & 2	Length	4'-0"	4'-0"	
			Spacing	4@4"	2@4¼"	2@5½"
10	$\frac{7}{8}\phi \times 3\frac{1}{2}"$	2	Length			
			Spacing	9"	9"	9"
11	$\frac{7}{8}\phi \times 3\frac{1}{2}"$	2	Length	6'-0"	6'-0"	
			Spacing	5"	6"	8"
12	$\frac{7}{8}\phi \times 3\frac{1}{2}"$	2	Length			
			Spacing	5½"	5½"	5½"
13	$\frac{7}{8}\phi \times 3\frac{1}{2}"$	2	Length	5'-0"	3'-0"	
			Spacing	3¼"	5"	6½"
14	$\frac{7}{8}\phi \times 3\frac{1}{2}"$	2	Length	5'-0"	5'-0"	
			Spacing	3"	5"	5"
15	$\frac{7}{8}\phi \times 3\frac{1}{2}"$	2	Length	6'-0"	6'-0"	
			Spacing	$3\frac{3}{4}$"	4½"	7¼"
16	$\frac{7}{8}\phi \times 3\frac{1}{2}"$	2	Length	6'-0"	6'-0"	
			Spacing	4"	$4\frac{3}{4}$"	8"
17	$\frac{7}{8}\phi \times 3\frac{1}{2}"$	2	Length	6'-0"	6'-0"	
			Spacing	5"	$5\frac{3}{4}$"	9½"
18	$\frac{7}{8}\phi \times 3\frac{1}{2}"$	2	Length	6'-0"	6'-0"	
			Spacing	$5\frac{3}{4}$"	8¼"	$12\frac{3}{4}$"

Schedule "A"

Beam No.	Stud Size	No. Of Rows		Zone 1	Zone 2	Zone 3
19	$\frac{7}{8}\phi \times 3\frac{1}{2}"$	2	Length	6'-0"	6'-0"	
			Spacing	$3\frac{3}{4}$"	4¼"	8¼"
20	$\frac{7}{8}\phi \times 3\frac{1}{2}"$	2	Length	6'-0"	6'-0"	
			Spacing	4¼"	5½"	11"
21	$\frac{7}{8}\phi \times 3\frac{1}{2}"$	2	Length	6'-0"	6'-0"	
			Spacing	6¾"	6¾"	8"
22	$\frac{7}{8}\phi \times 3\frac{1}{2}"$	2	Length	6'-0"	6'-0"	
			Spacing	4"	5¼"	9½"
23	$\frac{7}{8}\phi \times 3\frac{1}{2}"$	2	Length	6'-0"	6'-0"	
			Spacing	4½"	5¼"	9½"
24	$\frac{7}{8}\phi \times 3\frac{1}{2}"$	2	Length	6'-0"	6'-0"	
			Spacing	4½"	$5\frac{3}{4}$"	11½"
25	$\frac{7}{8}\phi \times 3\frac{1}{2}"$	2	Length	6'-0"	6'-0"	
			Spacing	4½"	6¼"	10"
26	$\frac{7}{8}\phi \times 3\frac{1}{2}"$	2	Length	6'-0"	6'-0"	
			Spacing	3½"	$4\frac{3}{4}$"	7¼"
27	$\frac{7}{8}\phi \times 3\frac{1}{2}"$	2	Length	4'-0"	4'-0"	
			Spacing	$3\frac{3}{4}$"	5"	$6\frac{3}{4}$"
28	$\frac{7}{8}\phi \times 3\frac{1}{2}"$	2	Length	4'-0"	4'-0"	
			Spacing	3½"	4½"	6"
29	$\frac{7}{8}\phi \times 3\frac{1}{2}"$	2	Length	4'-0"	4'-0"	
			Spacing	4¼"	5½"	7½"
30	$\frac{7}{8}\phi \times 3\frac{1}{2}"$	2	Length	4'-0"	4'-0"	
			Spacing	4½"	$5\frac{3}{4}$"	$7\frac{3}{4}$"
31	$\frac{7}{8}\phi \times 3\frac{1}{2}"$	2	Length	4'-0"	4'-0"	
			Spacing	$3\frac{3}{4}$"	$4\frac{3}{4}$"	6"
32	$\frac{7}{8}\phi \times 3\frac{1}{2}"$	3	Length	4'-0"		
			Spacing	3½"	5½"	5½"
33	$\frac{7}{8}\phi \times 3\frac{1}{2}"$	2	Length	4'-0"		
			Spacing	3¼"	5¼"	5¼"

Note:
See Dwg. 12-JK2-8 for explanation of schedule.

LICENSED PROFESSIONAL ENGINEER
LESLIE E. ROBERTSON
No. 34360
UNIVERSITY OF THE STATE OF NEW YORK

DESIGNED
DRAWN
REVISED

12-JK2-9

SKILLING, HELLE, CHRISTIANSEN, ROBERTSON — Structural & Civil Engineers

PROJECT: THE WORLD TRADE CENTER | TITLE: SCHEDULE FOR SHEAR CONNECTORS | DATE: 7-19-66

REVISIONS

Schedule "A"

Beam No.	Stud Size	No. Of Rows		Zone 1	Zone 2	Zone 3
34	7/8"φ×3½"	2	Length	4'-0"		
			Spacing	3¼"	5"	5"
35	7/8"φ×3½"	3	Length	4'-0"		
			Spacing	3½"	6"	6"
36	7/8"φ×3½"	2	Length	4'-0"		
			Spacing	3¼"	5½"	5½"
37	7/8"φ×3½"	2	Length			
			Spacing	3¾"	3¾"	3¾"
38	7/8"φ×3½"	3	Length	4'-0"		
			Spacing	3½"	5¾"	5¾"
39	7/8"φ×3½"	2	Length	6'-0"	6'-0"	
			Spacing	5"	7¼"	11"
40	7/8"φ×3½"	3	Length			
			Spacing	3"	3"	3"
41	7/8"φ×3½"	2	Length	5'-0"	5'-0"	
			Spacing	3"	4"	7"
42	7/8"φ×3½"	3	Length	5'-0"	5'-0"	
			Spacing	3¼"	4¼"	6"
43	7/8"φ×3½"	2	Length			
			Spacing	5"	5"	5"
44	7/8"φ×3½"	2	Length	5'-0"		
			Spacing	3¼"	5"	5"
45	7/8"φ×3½"	2	Length	5'-0"		
			Spacing	3¼"	6¼"	6¼"
46	7/8"φ×3½"	2	Length	6'-0"	6'-0"	
			Spacing	3"	4"	6½"
47	7/8"φ×3½"	5	Length	3'-6"		
			Spacing	3¼"	9½	9½"
48	7/8"φ×3½"	3	Length	6'-0"	5'-0"	
			Spacing	3¼"	5"	8¼"
49	7/8"φ×3½"	5	Length	5'-0"	5'-0"	
			Spacing	3¼"	5"	9"
50	7/8"φ×3½"	5	Length	8'-0"		
			Spacing	3¼"	9½"	9½"
51	7/8"φ×3½"	2	Length			
			Spacing	3"	3"	3"

Schedule "A"

Beam No.	Stud Size	No. Of Rows		Zone 1	Zone 2	Zone 3
52	7/8"φ×3½"	2	Length	6'-0"	5'-0"	
			Spacing	3¼"	5"	6½"
53	7/8"φ×3½"	2	Length	5'-0"	5'-0"	
			Spacing	3"	4"	6½"
54	7/8"φ×3½"	3	Length	5'-0"	5'-0"	
			Spacing	3"	5"	10"
55	7/8"φ×3½"	4	Length	5'-0"	5'-0"	
			Spacing	3¼"	5½"	10"
56	7/8"φ×3½"	3	Length			
			Spacing	3¼"	3¼"	3¼"
57	7/8"φ×3½"	2	Length	6'-6"		
			Spacing	3¼"	6¼"	6¼"
58	7/8"φ×3½"	3	Length	6'-0"		
			Spacing	3¼"	6½"	6½"
59	7/8"φ×3½"	3	Length	7'-6"		
			Spacing	3¼"	5"	5"
60	7/8"φ×3½"	4	Length	10'-0"		
			Spacing	3¼"	7¾"	7¾"
61	7/8"φ×3½"	3	Length	5'-0"		
			Spacing	3¼"	7½"	7½"
62	7/8"φ×3½"	2	Length	6'-0"	4'-0"	
			Spacing	3¼"	5"	6¼"
63	7/8"φ×3½"	2	Length	5'-0"	4'-0"	
			Spacing	3¾"	5"	6½"
64	7/8"φ×3½"	2	Length	3'-0"	3'-0"	
			Spacing	3"	3¾"	5"
65	7/8"φ×3½"	3	Length	5'-3"	5'-3"	
			Spacing	3¼"	4½"	7¾"
66	7/8"φ×3½"	4	Length	6'-0"	5'-0"	
			Spacing	3¼"	3¾"	7¾"

Note:
See Dwg. 12-JK2-8 for explanation of schedule.

LICENSED PROFESSIONAL ENGINEER — LESLIE E. ROBERTSON — No. 34360 — UNIVERSITY OF THE STATE OF NEW YORK

DESIGNED

DRAWN

REVISED

12-JK2-10

Structural & Civil Engineers

THE WORLD TRADE CENTER | SCHEDULE FOR SHEAR CONNECTORS | 12-19-68

REVISIONS

Schedule "A"

Beam No.	Stud Size	No. Of Rows		Zone 1	Zone 2	Zone 3
67	7/8"ϕ×3½"	4	Length	6'-0"	4'-0"	
			Spacing	3¼"	5"	8¾"
68	7/8"ϕ×3½"	3	Length	5'-0"	5'-0"	
			Spacing	3¼"	5"	10"
69	7/8"ϕ×3½"	3	Length	5'-0"		
			Spacing	3¼"	6"	6"
70	7/8"ϕ×3½"	5	Length	5'-0"		
			Spacing	3¼"	10"	10"
71	7/8"ϕ×3½"	3	Length	4'-0"	4'-0"	
			Spacing	3¼"	5"	7¾"
72	7/8"ϕ×3½"	2	Length	4'-6"	3'-6"	
			Spacing	3¼"	4"	6½"
73	7/8"ϕ×3½"	2	Length	6'-0"	6'-0"	
			Spacing	3"	4"	6½"
74	7/8"ϕ×3½"	3	Length	6'-0"	6'-0"	
			Spacing	3¼"	5½"	8¼"
75	7/8"ϕ×3½"	5	Length	6'-0"	5'-0"	
			Spacing	3¼"	5½"	11"
76	7/8"ϕ×3½"	3	Length	6'-0"	6'-0"	
			Spacing	3"	4"	7½"
77	7/8"ϕ×3½"	5	Length	4'-0"		
			Spacing	3¼"	9½"	9½"
78	7/8"ϕ×3½"	2	Length	6'-0"		
			Spacing	3"	10"	10"
79	7/8"ϕ×3½"	3	Length	6'-0"		
			Spacing	3¼"	4¼"	4¼"
80	7/8"ϕ×3½"	2	Length	6'-0"		
			Spacing	3"	8¼"	8¼"
81	7/8"ϕ×3½"	3	Length	6'-6"	5'-0"	
			Spacing	3¼"	5"	8¼"
82	7/8"ϕ×3½"	5 & 3	Length	6'-0"		
			Spacing	5@3¼"	3@4"	3@4"
83	7/8"ϕ×3½"	2	Length			
			Spacing	4½"	4½"	4½"
84	7/8"ϕ×3½"	3	Length	6'-0"	4'-0"	
			Spacing	4"	5¼"	7¼"

Schedule "A"

Beam No.	Stud Size	No. Of Rows		Zone 1	Zone 2	Zone 3
85	7/8"ϕ×3½"	3	Length	6'-0"	4'-0"	
			Spacing	4"	5½"	8½"
86	7/8"ϕ×3½"	3	Length	6'-0"	4'-0"	
			Spacing	4¾"	5½"	13"
87	7/8"ϕ×3½"	4	Length	6'-0"	4'-0"	
			Spacing	3¼"	4¼"	6"
88	7/8"ϕ×3½"	4	Length	6'-0"	4'-0"	
			Spacing	3¼"	3½"	7½"
89	7/8"ϕ×3½"	4	Length	6'-0"	4'-0"	
			Spacing	3"	4¼"	7"
90	7/8"ϕ×3½"	4	Length	6'-0"	4'-0"	
			Spacing	3"	4"	6"
91	7/8"ϕ×3½"	4	Length	6'-0"	4'-0"	
			Spacing	3¾"	4¾"	6"
92	7/8"ϕ×3½"	4	Length	6'-0"		
			Spacing	3"	5"	5"
93	7/8"ϕ×3½"	4	Length	6'-0"		
			Spacing	3"	4½"	4½"
94	7/8"ϕ×3½"	4	Length	6'-0"		
			Spacing	3¼"	5¼"	5¼"
95	7/8"ϕ×3½"	4	Length	6'-0"		
			Spacing	3¾"	5¼"	5¼"
96	7/8"ϕ×3½"	5	Length	6'-0"	4'-0"	
			Spacing	3¼"	4½"	7"
97	7/8"ϕ×3½"	2	Length			
			Spacing	4"	4"	4"
98	7/8"ϕ×3½"	2	Length			
			Spacing	5¼"	5¼"	5¼"
99	7/8"ϕ×3½"	3	Length			
			Spacing	3½"	3½"	3½"

Note:
See Dwg. 12-JK2-8 for explanation of schedule.

LICENSED PROFESSIONAL ENGINEER
LESLIE E. ROBERTSON
No. 34360
UNIVERSITY OF THE STATE OF NEW YORK

DESIGNED
DRAWN
REVIEWED

12-JK2-1

REVISIONS

THE WORLD TRADE CENTER | SCHEDULE FOR SHEAR CONNECTORS | 7-19-68

Schedule "A"

Beam No.	Stud Size	No. Of Rows		Zone 1	Zone 2	Zone 3
100	7/8"φ×3½"	3	Length			
			Spacing	4½"	4½"	4½"
101	7/8"φ×3½"	2	Length	4'-0"		
			Spacing	4"	7½"	7½"
102	7/8"φ×3½"	2	Length	7'-6"		
			Spacing	4"	7½"	7½"
103	7/8"φ×3½"	2	Length	6'-0"		
			Spacing	3"	6"	6"
104	7/8"φ×3½"	2	Length	7'-6"		
			Spacing	3"	4½"	4½"
105	7/8"φ×3½"	2	Length	6'-0"	4'-0"	
			Spacing	4"	6"	7½"
106	7/8"φ×3½"	2	Length	5'-0"	5'-0"	
			Spacing	3"	4"	5½"
107	7/8"φ×3½"	2	Length	6'-0"	6'-0"	
			Spacing	5"	7½"	10½"
108	7/8"φ×3½"	3	Length	10'-0"		
			Spacing	3"	7"	7"
109	7/8"φ×3½"	3	Length	5'-0"		
			Spacing	4"	9"	9"
110	7/8"φ×3½"	3	Length	5'-0"		
			Spacing	5"	6"	6"
111	7/8"φ×3½"	3	Length	10'-0"		
			Spacing	5"	6"	6"
112	7/8"φ×3½"	3	Length	5'-0"		
			Spacing	3"	15"	15"
113	7/8"φ×3½"	3	Length	5'-0"		
			Spacing	3½"	10½"	10½"
114	7/8"φ×3½"	3	Length	6'-0"	5'-0"	
			Spacing	3"	3½"	7"
115	7/8"φ×3½"	3	Length	6'-0"	4'-0"	
			Spacing	3"	4½"	8"
116	7/8"φ×3½"	3	Length	5'-0"	5'-0"	
			Spacing	4	6'	2"
117	7/8"φ×3½"	4	Length	5'-0"		
			Spacing	3"	16"	16"

Schedule "A"

Beam No.	Stud Size	No. Of Rows		Zone 1	Zone 2	Zone 3
118	7/8"φ×3½"	4	Length	5'-0"	5'-0"	
			Spacing	3"	9"	12"
119	7/8"φ×3½"	2	Length	5'-0"		
			Spacing	3"	5¾"	5¾"
			Length			
			Spacing			
			Length			
			Spacing			
			Length			
			Spacing			
			Length			
			Spacing			
			Length			
			Spacing			
			Length			
			Spacing			
			Length			
			Spacing			
			Length			
			Spacing			
			Length			
			Spacing			
			Length			
			Spacing			
			Length			
			Spacing			
			Length			
			Spacing			

Note:
See Dwg. 12-JK2-8 for explanation of schedule.

LICENSED PROFESSIONAL ENGINEER
LESLIE E. ROBERTSON
No. 34360
UNIVERSITY OF THE STATE OF NEW YORK

DESIGNED
DRAWN
REVIEWED

12-JK2-12

REVISIONS

THE WORLD TRADE CENTER — SCHEDULE FOR SHEAR CONNECTORS

Schedule "A"

Beam No.	Stud Size	No. Of Rows		Zone 1	Zone 2	Zone 3
120	7/8"φ×3½"	4	Length	12'-0"		
			Spacing	4"	10½"	10½"
121		3	Length	7'-0"		
			Spacing	3½"	18"	18"
122		3	Length	6'-0"	5'-0"	
			Spacing	3½"	9"	12"
123 (see note 2)		4	Length	6'-0"	4'-0"	
			Spacing	3"	4"	8¼"
124 (see note 2)		5	Length	6'-0"	4'-0"	
			Spacing	3"	4¼"	7"
125 (see note 2)		7	Length	6'-0"	4'-0"	
			Spacing	3"	4"	6¾"
126		5	Length	6'-0"	4'-0"	
			Spacing	3"	4"	6"
127		3	Length	6'-0"	4'-0"	
			Spacing	3½"	6¾"	6¾"
128		2	Length	6'-0"	4'-0"	
			Spacing	4"	7"	7"
129		3	Length	6'-0"	4'-0"	
			Spacing	4"	5½"	9"
130		4	Length	6'-0"	4'-0"	
			Spacing	3"	8¼"	8¼"
131		5	Length	6'-0"	4'-0"	
			Spacing	3"	4¼"	6½"
132		6	Length	6'-0"	4'-0"	
			Spacing	3"	5¼"	8¾"
133		2	Length	6'-0"		
			Spacing	3"	6¼"	6¼"
134		3	Length	6'-0"	4'-0"	
			Spacing	4"	5"	8¼"
135		2	Length	6'-0"	6'-0"	
			Spacing	3"	4"	6¼"
136		2	Length	6'-0"	4'-0"	
			Spacing	3¼"	5"	6¼"
137	7/8"φ×3½"	2	Length	4'-0"	6'-0"	
			Spacing	4"	5½"	12"

Schedule "A"

Beam No.	Stud Size	No. Of Rows		Zone 1	Zone 2	Zone 3
138	7/8"φ×3½"	2	Length	4'-0"	6'-0"	
			Spacing	3¾"	5¾"	15"
139		4	Length	4'-0"	6'-0"	
			Spacing	4¼"	7¾"	16"
140		4	Length	4'-0"	6'-0"	
			Spacing	3½"	5"	13"
141		4	Length	5'-0"		
			Spacing	5¾"		
142		2	Length	4'-0"	6'-0"	—
			Spacing	3¼"	4½"	12¼"
143		2	Length	4'-0"	6'-0"	
			Spacing	3¼"	4¾"	12½"
144		2	Length	4'-0"	6'-0"	
			Spacing	3½"	5"	11"
145		2	Length	4'-0"	6'-0"	
			Spacing	3¾"	5½"	13¼"
146		2	Length	4'-0"	6'-0"	
			Spacing	3½"	5"	12¼"
147		2	Length	4'-0"	6'-0"	
			Spacing	3½"	4¾"	10¾"
148		2	Length	4'-0"	6'-0"	
			Spacing	5½"	8"	20"
149		2	Length	4'-0"	6'-0"	
			Spacing	5½"	8¾"	8¾"
150		2	Length	4'-0"	6'-0"	
			Spacing	4¾"	6¾"	18"
151		2	Length	4'-0"	6'-0"	
			Spacing	5"	8½"	
152	7/8"φ×3½"	2	Length	4'-0"	6'-0"	
			Spacing	4¾"	8"	

Notes:

1. See Dwg. 12-JK2-8 for explanation of schedule.
2. Length of stud spacing is between columns. Cantilever portion has no studs.

LICENSED PROFESSIONAL ENGINEER LESLIE E. ROBERTSON No. 34360 UNIVERSITY OF NEW YORK

DESIGNED

DRAWN

REVIEWED

12-JK2-13

SKILLING, HELLE, CHRISTIANSEN, ROBERTSON — Structural & Civil Engineers

PROJECT: THE WORLD TRADE CENTER | TITLE: SCHEDULE FOR SHEAR CONNECTORS | DATE: 11-5-68

REVISIONS

Schedule "A"

Beam No.	Stud Size	No. Of Rows		Zone 1	Zone 2	Zone 3
153	7/8"ϕ x 3½"	2	Length	4'-0"	6'-0"	
			Spacing	4½"	7¾"	
154		4	Length	4'-0"	6'-0"	
			Spacing	5"	6¾"	15"
155		4	Length	4'-0"	6'-0"	
			Spacing	4½"	7½"	13½"
156		2	Length	4'-0"	6'-0"	
			Spacing	5"	7"	15"
157		4	Length	4'-0"	6'-0"	
			Spacing	5¾"	7¾"	17"
158		2	Length	4'-0"	6'-0"	
			Spacing	3¾"	5¾"	21"
159		2	Length	4'-0"	6'-0"	
			Spacing	3¾"	6¼"	
160		2	Length	4'-0"	6'-0"	
			Spacing	4¼"	6¼"	16"
161		2	Length	4'-0"	6'-0"	
			Spacing	3"	4"	9"
162		4	Length	4'-0"	6'-0"	
			Spacing	4¾"	6½"	14½"
163		4	Length	4'-0"	6'-0"	
			Spacing	4"	5¼"	17½"
164		4	Length	4'-0"	6'-0"	
			Spacing	5¼"	7½"	22"
165		2	Length	4'-0"	6'-0"	
			Spacing	3½"	5½"	5½"
166		4	Length	4'-0"	6'-0"	
			Spacing	5"	7"	16½"
167		2	Length	4'-0"	6'-0"	
			Spacing	3¼"	4¾"	14"
168		4	Length	4'-0"	6'-0"	
			Spacing	3"	4¼"	9½"
169		2	Length	4'-0"	6'-0"	
			Spacing	3¼"	4¾"	10¼"
170	7/8"ϕ x 3½"	2	Length	4'-0"	6'-0"	
			Spacing	3½"	4¾"	10¾"

Schedule "A"

Beam No.	Stud Size	No. Of Rows		Zone 1	Zone 2	Zone 3
171	7/8"ϕ x 3½"	2	Length	4'-0"	6'-0"	
			Spacing	3¼"	4¾"	12¼"
172		2	Length	4'-0"	6'-0"	
			Spacing	3½"	4½"	10"
173		2	Length	4'-0"	6'-0"	
			Spacing	3¼"	4½"	10"
174		2	Length	4'-0"	6'-0"	
			Spacing	3¾"	5"	11"
175		2	Length	4'-0"	6'-0"	
			Spacing	4¾"	6½"	14¼"
176		4	Length	4'-0"	6'-0"	
			Spacing	4¼"	6"	13"
177		2	Length	4'-0"	6'-0"	
			Spacing	3¾"	5¼"	13½"
178		2	Length	4'-0"	6'-0"	
			Spacing	4½"	6¼"	13¾"
179		2	Length	4'-0"	6'-0"	
			Spacing	3½"	5"	11"
180		2	Length	4'-0"	6'-0"	
			Spacing	3¼"	4½"	10"
181		4	Length	4'-0"	6'-0"	
			Spacing	4½"	6"	13¼"
182		4	Length	4'-0"	6'-0"	
			Spacing	4½"	6"	13½"
183		2	Length	4'-0"	6'-0"	
			Spacing	3¾"	5"	9¾"
184		2	Length	4'-0"	6'-0"	
			Spacing	4¼"	6"	13"
185	7/8"ϕ x 3½"	6	Length	4'-0"	6'-0"	
			Spacing	3¾"	5¼"	11½"

Notes:

1. See Dwg. 12-JK2-8 for explanation of schedule.

LICENCED PROFESSIONAL ENGINEER — LESLIE E. ROBERTSON — No. 34360 — UNIVERSITY OF THE STATE OF NEW YORK

DESIGNED

DRAWN

REVIEWED

12-JK2-14

SKILLING, HELLE, CHRISTIANSEN, ROBERTSON — Structural & Civil Engineers

PROJECT: THE WORLD TRADE CENTER | TITLE: SCHEDULE FOR SHEAR CONNECTORS | DATE: 11-5-68

REVISIONS

Schedule "A"

Beam No.	Stud Size	No. Of Rows		Zone 1	Zone 2	Zone 3
186	7/8"ϕ x 3½"	4	Length	4'-0"	6'-0"	
			Spacing	4¾"	6½"	14"
187		2	Length	4'-0"	6'-0"	
			Spacing	3¼"	4½"	10"
188		2	Length	5'-6"		
			Spacing	3¼"		
189		4	Length	4'-0"	6'-0"	
			Spacing	5¾"	7¾"	15½"
190		2	Length	4'-0"	6'-0"	
			Spacing	3¼"	4½"	9"
191		2	Length	4'-0"	6'-0"	
			Spacing	3"	4"	8½"
192		4	Length	4'-0"	6'-0"	
			Spacing	5¼"	7½"	19¾"
193		4	Length	4'-0"	6'-0"	
			Spacing	5"	6¾"	14½"
194		4	Length	4'-0"	6'-0"	
			Spacing	5¼"	7¼"	16"
195		2	Length	4'-0"	6'-0"	
			Spacing	3¾	5"	11"
196		4	Length	4'-0"	6'-0"	
			Spacing	3¾"	5"	11"
197		4	Length	4'-0"	6'-0"	
			Spacing	5½"	7½"	16¼"
198		4	Length	4'-0"	6'-0"	
			Spacing	5¾"	7¾"	17"
199		4	Length	4'-0"	3'-0"	
			Spacing	4¾"	11"	
200		2	Length	4'-0"	6'-0"	
			Spacing	3½"	5"	11"
201		4	Length	4'-0"	6'-0"	
			Spacing	3¾"	5¼	10¾"
202		4	Length	4'-0"	6'-0"	
			Spacing	5¼"	7¼"	16"
203	7/8"ϕ x 3½"	4	Length	4'-0"	6'-0"	
			Spacing	3¾"	5¼"	14½"

Schedule "A"

Beam No.	Stud Size	No. Of Rows		Zone 1	Zone 2	Zone 3
204	7/8"ϕ x 3½"	4	Length	4'-0"	6'-0"	
			Spacing	5"	8½"	
205		2	Length	4'-0"		
			Spacing	3"	9"	
206		2	Length	4'-0"	6'-0"	
			Spacing	3"	4"	8"
207		2	Length	4'-0"	6'-0"	
			Spacing	4¼"	5¾"	11"
208		4	Length	4'-0"	5'-0"	
			Spacing	5¾"	10½"	
209		2	Length	4'-0"	3'-5"	
			Spacing	4¾"	10"	
210		2	Length	4'-0"	6'-0"	
			Spacing	3"	4"	7½"
211		2	Length	4'-0"	6'-0"	
			Spacing	3"	4"	8½"
212		2	Length	4'-0"	6'-0"	
			Spacing	4¼	5½"	9"
213 (See dwg 12-JK2-160)		2	Length	4'-0"	6'-0"	
			Spacing	4	5¼	12
214		4	Length	4'-0"	6'-0"	
			Spacing	4¼"	6"	13"
215		4	Length	4'-0"	6'-0"	
			Spacing	5½"	7½"	16½"
216		4	Length	4'-0"	6'-0"	
			Spacing	5"	7¾	24
217		2	Length	4'-0"	6'-0"	
			Spacing	3¼"	3¾"	6¼
218	7/8"ϕ x 3½"	4	Length	4'-0"	6'-0"	
			Spacing	4¼	5¾"	21"

Notes:

1. See Dwg. 12-JK2-8 for explanation of schedule.

LICENSED PROFESSIONAL ENGINEER — LESLIE E. ROBERTSON — No. 34360 — STATE OF NEW YORK

DESIGNED

DRAWN

REVIEWED

12-JK2-15

SKILLING, HELLE, CHRISTIANSEN, ROBERTSON — Structural & Civil Engineers

PROJECT: THE WORLD TRADE CENTER | TITLE: SCHEDULE FOR SHEAR CONNECTORS | DATE: 11-5-68

REVISIONS

DESIGNED

DRAWN

REVIEWED

Schedule "A"

Beam No.	Stud Size	No. Of Rows		Zone 1	Zone 2	Zone 3
219	7/8"ϕ x 3½"	4	Length	4'-0"	6'-0"	
			Spacing	5"	7"	15"
220		2	Length	4'-0"	6'-0"	
			Spacing	3¾"	5"	11¼"
221		2	Length	4'-0"	6'-0"	
			Spacing	3¼"	4¾"	19½"
222		2	Length	4'-0"	6'-0"	
			Spacing	3"	4"	6¼"
223		2	Length	4'-0"	6'-0"	
			Spacing	4"	6¼"	24"
224		4	Length	4'-0"	6'-0"	
			Spacing	5½"	7"	11¾"
225		6	Length	4'-0"	6'-0"	
			Spacing	4"	4¾"	7½"
226		2	Length	4'-0"	6'-0"	
			Spacing	3¾"	5¼"	11¾"
227		4	Length	4'-0"	6'-0"	
			Spacing	5"	7"	16½"
228		4	Length	4'-0"	6'-0"	
			Spacing	4¼"	5¾"	12¾"
229		4	Length	4'-0"	6'-0"	
			Spacing	4¾"	6½"	14"
230		6	Length	4'-0"	6'-0"	
			Spacing	4¼"	6"	12¼
231		2	Length	4'-0"	6'-0"	
			Spacing	5½"	7½"	17"
232		4	Length	4'-0"	6'-0"	
			Spacing	5"	7¼"	16"
233		4	Length	4'-0"	6'-0"	
			Spacing	4"	5"	8½"
234		4	Length	4'-0"	6'-0"	
			Spacing	3"	4¼"	6¼"
235		4	Length	4'-0"	6'-0"	
			Spacing	4¾"	6½"	12½"
236	7/8ϕ x 3½	2	Length	4'-0"	6'-0"	
			Spacing	3"	4¼"	9½"

Schedule "A"

Beam No.	Stud Size	No. Of Rows		Zone 1	Zone 2	Zone 3
237	7/8"ϕx3½"	2	Length	4'-0"	6'-0"	
			Spacing	3½"	4½"	7½"
238		4	Length	4'-0"	6'-0"	
			Spacing	5"	7"	17"
239		2	Length	4'-0"	6'-0"	
			Spacing	5¼"	7¼"	16"
240		4	Length	4'-0"	6'-0"	
			Spacing	3¾"	4¾"	7"
241		2	Length	4'-0"	6'-0"	
			Spacing	4½"	5¼"	7"
242		4	Length	4'-0"	6'-0"	
			Spacing	3"	4"	8"
243		2	Length	4'-0"	6'-0"	
			Spacing	3¼"	4½"	8¾"
244		2	Length	4'-0"	6'-0"	
			Spacing	4"	6"	24"
245		2	Length	4'-0"	6'-0"	
			Spacing	3½"	4¾"	10½"
246		4	Length	4'-0"	6'-0"	
			Spacing	5½"	7½"	16½"
247		2	Length	4'-0	6'-0"	
			Spacing	4¼"	5"	6½"
248		4	Length	4'-0"	6'-0"	
			Spacing	3½"	5"	11"
249		2	Length	4'-0"	6'-0"	
			Spacing	3½"	4½"	8"
250		4	Length	4'-0"	6'-0"	
			Spacing	3"	5½"	
251	7/8"ϕx3½"	2	Length	4'-0"	6'-0"	
			Spacing	3¼"	4¾"	11"

Notes:

1. See Dwg. 12-JK2-8 for explanation of schedule.

12-JK2-16

SKILLING, HELLE, CHRISTIANSEN, ROBERTSON — Structural & Civil Engineers

PROJECT: THE WORLD TRADE CENTER | TITLE: SCHEDULE FOR SHEAR CONNECTORS | DATE: 11-5-68

REVISIONS

Schedule "A"

Beam No.	Stud Size	No. Of Rows		Zone 1	Zone 2	Zone 3
252	7/8"ϕ x 3½"	4	Length	4'-0"	6'-0"	
			Spacing	5"	7"	16½"
253		4	Length	4'-0"	6'-0"	
			Spacing	3¼"	4½"	12½"
254		4	Length	4'-0"	6'-0"	
			Spacing	5½"	7¾"	18"
255		4	Length	4'-0"	6'-0"	
			Spacing	3¾"	5¼"	13½"
256		4	Length	4'-0"	6'-0"	
			Spacing	4½"	6"	15¾"
257		6	Length	4'-0"	6'-0"	
			Spacing	4¼"	5"	7¾"
258		4	Length	4'-0"	6'-0"	
			Spacing	3¼"	4"	5¾"
259		4	Length	4'-0"	6'-0	
			Spacing	3½"	4¼	7¼"
260		4	Length	4'-0"	6'-0"	
			Spacing	4½"	6'	12"
261		4	Length	4'-0"	6'-0"	
			Spacing	5¼"	7"	13½"
262		4	Length	4'-0"	6'-0"	
			Spacing	5"	6¾"	16½"
263		4	Length	4'-0"	6'-0"	
			Spacing	5¾"	7¾"	18½"
264		4	Length	4'-0"	6'-0"	
			Spacing	4¾	6½"	15"
265		4	Length	4'-0"	6'-0"	
			Spacing	4¾	6½"	16"
266		2	Length	4'-0"	6'-0"	
			Spacing	4"	5½"	14½"
267		2	Length	4'-0"	6'-0"	
			Spacing	4½	6½"	16½"
268		2	Length	4'-0"	6'-0"	
			Spacing	3"	4¼	9½"
269	7/8"ϕ x 3½"	2	Length	4'-0"	6'-0	
			Spacing	5¼	7½	19"

Schedule "A"

Beam No.	Stud Size	No. Of Rows		Zone 1	Zone 2	Zone 3
270	7/8"ϕ x 3½"	2	Length	4'-0"	6'-0"	
			Spacing	6"	8"	18"
271		2	Length	4'-0"	6'-0"	
			Spacing	5¼"	7"	15¾"
272		2	Length	4'-0"	6'-0"	
			Spacing	5¼"	7¼"	16"
273		2	Length	4'-0"	6'-0"	
			Spacing	6¼"	8½"	19"
274		4	Length	4'-0"	6'-0"	
			Spacing	3"	4"	9"
275		2	Length	4'-0"	6'-0"	
			Spacing	3¼"	4½"	10"
276		2	Length	4'-0	6'-0"	
			Spacing	4½	6¼"	13½
277		2	Length	4'-0"	6'-0	
			Spacing	3¼	5¾	
278		4	Length	4'-0"	6'-0"	
			Spacing	5"	8¾"	
279		2	Length	4'-0"	6'-0"	
			Spacing	4¼	10	
280		4	Length	4'-0"	6'-0"	
			Spacing	4½"	6¾	23"
281		2	Length	4'-0"	6'-0"	
			Spacing	3½	3½	
282		4	Length	4'-0"	6'-0	
			Spacing	5¼	5¼	
283		2	Length	4'-0	6'-0	
			Spacing	3½		
284	7/8"ϕ x 3½"	2	Length	4'-0"	6'-0"	
			Spacing	3½	5½"	5½

Notes:

1. See Dwg. 12-JK2-8 for explanation of schedule.

LICENSED PROFESSIONAL ENGINEER — LESLIE E. ROBERTSON — No. 34360 — UNIVERSITY OF THE STATE OF NEW YORK

DESIGNED

DRAWN

REVIEWED

12-JK2-17

SKILLING, HELLE, CHRISTIANSEN, ROBERTSON — Structural & Civil Engineers

PROJECT: THE WORLD TRADE CENTER | TITLE: SCHEDULE FOR SHEAR CONNECTORS | DATE: 11-5-68

REVISIONS

Schedule "A"

Beam No.	Stud Size	No. Of Rows		Zone 1	Zone 2	Zone 3
285	7/8"ϕx3½"	2	Length	4'-0"	6'-0"	
			Spacing	4½"	7¾"	
286		2	Length	5'-0"		
			Spacing	7½"		
287		2	Length	4'-0"	6'-0"	
			Spacing	7¼"	9¾"	21½"
288		2	Length	4'-0"	3'-0"	
			Spacing	3¾"	8¾"	
289		2	Length	4'-0"	3'-0"	
			Spacing	5"	11¾"	
290		2	Length	4'-0"	6'-0"	
			Spacing	4½"	7½"	
291		2	Length	4'-0"	3'-0"	
			Spacing	6"	13½"	
292		2	Length	4'-0"	3'-5"	
			Spacing	4"	8¾"	
293		2	Length	4'-0"	6'-0"	
			Spacing	4"	6½"	
294		2	Length	4'-0"	6'-0"	
			Spacing	5¾"	9½"	
295		2	Length	4'-0"	6'-0"	
			Spacing	4½"	6"	13½"
296		2	Length	4'-0"	6'-0"	
			Spacing	3"	4"	9"
297		2	Length	4'-0"	6'-0"	
			Spacing	5¾"	8"	17½"
298		4	Length	4'-0"	6'-0"	
			Spacing	3½"	5"	11"
299		2	Length	4'-6"		
			Spacing	4¾"		
70[illegible]		4	Length	4'-0"	6'-0"	
			Spacing	4¾"	7¼"	24"
[illegible]		-	Length	4'-0"	6'-0"	
			Spacing	5¾"	8¼	22"
[illegible]	7/8"ϕx3½"	2	Length	4'-0	4'-0"	
			Spacing	3¾"	7½"	

Schedule "A"

Beam No.	Stud Size	No. Of Rows		Zone 1	Zone 2	Zone 3
704	7/8"ϕx3½"	2	Length	4'-0"	5'-0"	
			Spacing	4¼"	7¾"	
705		4	Length	4'-0"		
			Spacing	5¼"	12"	
706		4	Length	4'-0"		
			Spacing	4¼"	10"	
707		2	Length	4'-0"	3'-0"	
			Spacing	5½"	12½"	
708		2	Length	4'-0"		
			Spacing	6¾"	12½"	
709		3	Length	4'-0"	6'-0"	
			Spacing	3½"	5¾"	
710		2	Length	4'-0"	6'-0"	
			Spacing	4"	6¾"	
711		2	Length	4'-6"		
			Spacing	4"		
712		2	Length	4'-0"		
			Spacing	5¼"		
713		4	Length	4'-0"		
			Spacing	4¾"		
714		2	Length	4'-0"	6'-0"	
			Spacing	5"	8¼	24
715		2	Length	4'-0"		
			Spacing	9¾	9¾	
716		2	Length	4'-0	6'-0"	
			Spacing	3¾	6½"	
717		2	Length	4'-0"		
			Spacing	6¾		
718		2	Length	4'-0"	6'-0"	
			Spacing	5¾"	8"	19"
719		2	Length	4'-0"		
			Spacing	7¾"	22"	
720	7/8"ϕx3½"	4	Length	4'-0"	6'-0"	
			Spacing	4¾"	6½"	14"

Notes:

1. See Dwg. 12-JK2-8 for explanation of schedule.

12-JK2-17A

DESIGNED

DRAWN

REVISIONED

SKILLING, HELLE, CHRISTIANSEN, ROBERTSON — Structural & Civil Engineers

PROJECT: THE WORLD TRADE CENTER | TITLE: SCHEDULE FOR SHEAR CONNECTORS | DATE: 7-23-68

REVISIONS
4-18-69
4-14-70

Schedule "A"

Beam No.	Stud Size	No. Of Rows		Zone 1	Zone 2	Zone 3
721	$\frac{3}{4}$"Φ×3"	4	Length	5'-0"	5'-0"	
			Spacing	3½"	4¼"	7"
722	$\frac{3}{4}$"Φ×3"	4	Length	5'-0"		
			Spacing	3½"	5¼"	
723	$\frac{7}{8}$"Φ×3½"	2	Length	5'-0"	5'-0"	
			Spacing	4½"	6"	9"
724	$\frac{7}{8}$"Φ×3½"	3	Length	5'-6"	5'-6"	
			Spacing	3"	5"	12"
725	$\frac{7}{8}$"Φ×3½"	3	Length	5'-0"	5'-0"	
			Spacing	4½"	6"	8"
726	$\frac{7}{8}$"Φ×3½"	2	Length	5'-0"	5'-0"	
			Spacing	8"	12"	12"
727	$\frac{7}{8}$"Φ×3½"	3	Length	5'-6"	5'-6"	
			Spacing	4"	5½"	7"
728	$\frac{7}{8}$"Φ×3½"	3	Length	4'-0"	6'-0"	
			Spacing	8"	10"	12"
729	$\frac{7}{8}$"Φ×3½"	3	Length	5'-3"	5'-3"	
			Spacing	4½"	7½"	8"
730	$\frac{7}{8}$"Φ×3½"	3	Length	6'-0"	6'-0"	
			Spacing	5"	8½"	12"
731	$\frac{7}{8}$"Φ×3½"	4	Length	2'-0"		
			Spacing	3"	9"	
732	$\frac{7}{8}$"Φ×3½"	4	Length	4'-0"	6'-0"	
			Spacing	3"	4½"	9"
733	$\frac{7}{8}$"Φ×3½"	3	Length	4'-0"	6'-0"	
			Spacing	3"	4½"	8"
734	$\frac{7}{8}$"Φ×3½"	3	Length	4'-0"	6'-0"	
			Spacing	3"	4½"	7½"
			Length			
			Spacing			
			Length			
			Spacing			
			Length			
			Spacing			
			Length			
			Spacing			

Schedule "A"

Beam No.	Stud Size	No. Of Rows		Zone 1	Zone 2	Zone 3
			Length			
			Spacing			
			Length			
			Spacing			
			Length			
			Spacing			
			Length			
			Spacing			
			Length			
			Spacing			
			Length			
			Spacing			
			Length			
			Spacing			
			Length			
			Spacing			
			Length			
			Spacing			
			Length			
			Spacing			
			Length			
			Spacing			
			Length			
			Spacing			
			Length			
			Spacing			
			Length			
			Spacing			

Note:
See Dwg. 12-JK2-8 for explanation of schedule.

LICENSED PROFESSIONAL ENGINEER
LESLIE E. ROBERTSON
No. 34960
UNIVERSITY OF THE STATE OF NEW YORK

DESIGNED
DRAWN S.C.
REVISED E.L.

12-JK2-17B

SKILLING, HELLE, CHRISTIANSEN, ROBERTSON — Structural & Civil Engineers

PROJECT: THE WORLD TRADE CENTER | TITLE: SCHEDULE FOR SHEAR CONNECTOR | DATE: 9-20-68

REVISIONS

SCHEDULE "B"

For beams not included in tables 12-JK2-20 thru. 31

Beam No.	Stud Size	No. Of Rows	Total No. Of Studs
301	3/4"ϕ x 3"	3	171
302	3/4"ϕ x 3"	3	174
303	3/4"ϕ x 3"	2	54

Beam No.	Stud Size	No. Of Rows	Total No. Of Studs

Note:
1. See notes on 12-JK2-20 for further description of studs.
2. All studs to be spaced uniformly over the length of beam.

LICENSED PROFESSIONAL ENGINEER — LESLIE E. ROBERTSON — No. 34360 — STATE OF NEW YORK

DESIGNED

DRAWN

REVIEWED

12-JK2-18

SKILLING, HELLE, CHRISTIANSEN, ROBERTSON — Structural & Civil Engineers

PROJECT: THE WORLD TRADE CENTER | TITLE: SCHEDULE FOR SHEAR CONNECTOR | DATE: 9-20-68

REVISIONS

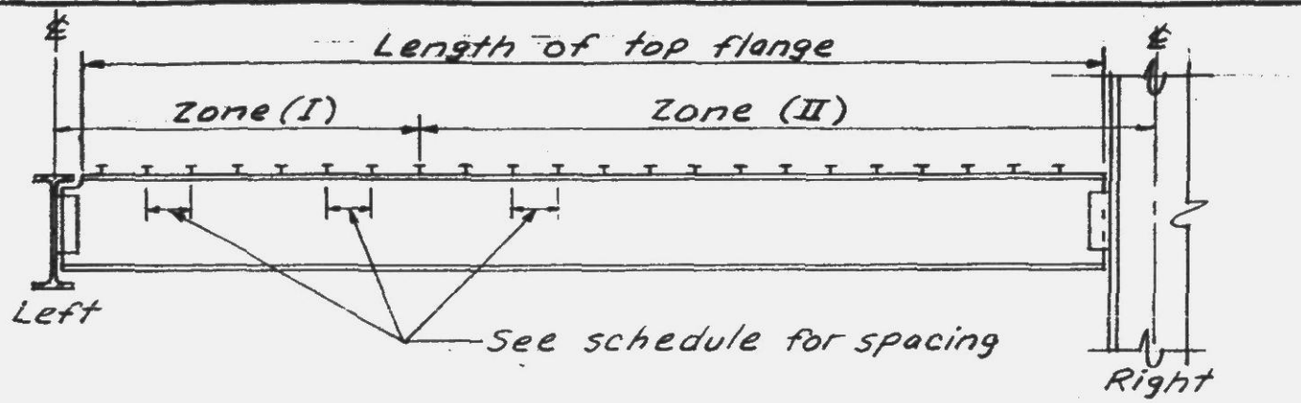

SCHEDULE "C"

For beams where point of max. moment is not at ℄ of span

Beam No.	Stud Size	ZONE (I) Length	No. Of Rows	Total No. Of Studs	ZONE (II) Length	No. Of Rows	Total No. Of Studs
401	¾ϕx 3"	20'-0"	2	88	10'-0"	3	87
402	¾ϕx 3"	8'-8"	3	90	21'-4"	2	90
403	¾ϕx 3"	9'-0"	3	87	15'-0"	2	88
404	¾ϕx 3"	18'-0"	2	86	12'-0"	3	87
405	¾ϕx 3"	17'-5"	2	76	10'-0"	3	78
406	¾ϕx 3"	15'-0"	2	58	12'-6"	3	57
407	¾ϕx 3"	20'-0"	2	90	10'-0"	3	90
408	¾ϕx 3"	10'-5"	3	90	19'-7"	2	88
409	¾ϕx 3"	10'-5"	3	84	19'-7"	2	84
410	¾ϕx 3"	23'-0"	2	76	7'-0"	3	78
411	¾ϕx 3"	23'-0"	2	84	7'-0"	4	84
412	¾ϕx 3"	20'-0"	2	84	10'-0"	3	84
413	¾ϕx 3"	4'-6"	5	75	25'-6"	2	76
414	¾ϕx 3"	22'-0"	2	86	8'-0"	3	87
415	¾ϕx 3"	12'-6"	3	87	17'-6"	2	86
416	¾ϕx 3"	12'-3"	2	76	7'-9"	3	75
417	¾ϕx 3"	17'-0"	2	68	13'-0"	2	68
418	¾ϕx 3"	9'-3"	3	63	18'-9"	2	64
419	¾ϕx 3"	9'-0"	3	87	22'-6"	2	86
420	¾ϕx 3"	18'-0"	2	86	10'-6"	3	87

Beam No.	Stud Size	ZONE (I) Length	No. Of Rows	Total No. Of Studs	ZONE (II) Length	No. Of Rows	Total No. Of Studs
421	¾"ϕx3"	10'-0"	3	87	20'-0"	2	86
422	¾"ϕx3"	4'-6"	5	85	25'-6"	2	86
423	¾"ϕx3"	10'-0"	3	69	20'-0"	2	68
424	¾"ϕx3"	7'-6"	4	88	22'-6"	2	88
425	¾"ϕx3"	7'-6"	4	84	22'-6"	2	84
426	¾"ϕx3"	22'-0"	2	76	8'-0"	3	75
427	¾"ϕx3"	12'-6"	4	88	17'-6"	2	88
428	¾"ϕx3"	5'-8"	4	68	24'-4"	2	68
429	¾"ϕx3"	21'-0"	2	84	9'-0"	3	84
430	¾"ϕx3"	11'-0"	4	88	19'-0"	2	88
431	¾"ϕx3"	10'-0"	3	75	20'-0"	2	76
432	¾"ϕx3"	24'-6"	2	86	5'-6"	5	85
433	¾"ϕx3"	17'-0"	2	90	13'-0"	3	90
434	¾"ϕx3"	17'-0"	2	76	13'-0"	3	75
435	¾"ϕx3"	18'-6"	2	86	9'-6"	3	87
436	¾"ϕx3"	21'-0"	2	88	9'-0"	4	88
437	¾"ϕx3"	11'-6"	3	90	18'-6"	2	90
438	¾"ϕx3"	11'-6"	3	75	18'-6"	2	76
439	¾"ϕx3"	15'-0"	2	76	10'-0"	3	78

Note:
See notes on 12-JK2-20 for further description of studs.

LICENSED PROFESSIONAL ENGINEER — LESLIE E. ROBERTSON — No. 34360 — UNIVERSITY OF THE STATE OF NEW YORK

DESIGNED

DRAWN

REVIEWED

12-JK2-19

SKILLING, HELLE, CHRISTIANSEN, ROBERTSON — Structural & Civil Engineers

PROJECT: THE WORLD TRADE CENTER | TITLE: SCHEDULE FOR SHEAR CONNECTORS | DATE: 4-18-69

REVISIONS

SCHEDULE "C"

Beam No.	Stud size	ZONE (I) Length	ZONE (I) No. of rows	ZONE (I) Total No. of studs	ZONE (II) Length	ZONE (II) No. of rows	ZONE (II) Total No. of studs
440	$\frac{3}{4}\phi \times 3"$	14'-9"	3	84	21'-3"	3	84
441	$\frac{3}{4}\phi \times 3"$	14'-7"	2	40	17'-5"	2	40
442	$\frac{3}{4}\phi \times 3"$	10'-0"	3	63	20'-0"	3	63
443	$\frac{3}{4}\phi \times 3"$	20'-0"	3	72	14'-0"	3	72
444	$\frac{3}{4}\phi \times 3"$	14'-0"	3	54	21'-0"	3	54
445	$\frac{3}{4}\phi \times 3"$	14'-0"	3	69	22'-0"	3	69
446	$\frac{3}{4}\phi \times 3"$	16'-0"	3	69	20'-0"	3	69
447	$\frac{3}{4}\phi \times 3"$	14'-0"	3	69	19'-0"	3	69
448	$\frac{3}{4}\phi \times 3"$	14'-6"	3	69	18'-6"	3	69
449	$\frac{3}{4}\phi \times 3"$	13'-7"	3	60	19'-5"	3	60
450	$\frac{3}{4}\phi \times 3"$	14'-6"	3	84	21'-6"	3	84
451	$\frac{3}{4}\phi \times 3"$	15'-2"	2	21	11'-10"	2	21
452	$\frac{3}{4}\phi \times 3"$	22'-0"	3	78	11'-0"	3	78
453	$\frac{3}{4}\phi \times 3"$	11'-0"	3	48	9'-0"	3	48

SCHEDULE "C"

Beam No.	Stud size	ZONE (I) Length	ZONE (I) No. of rows	ZONE (I) Total No. of studs	ZONE (II) Length	ZONE (II) No. of rows	ZONE (II) Total No. of studs

LICENSED PROFESSIONAL ENGINEER — LESLIE E. ROBERTSON — No. 34360 — UNIVERSITY OF THE STATE OF NEW YORK

Note:
See 12-JK2-19 & 12-JK2-20 for further description of studs.

DESIGNED

DRAWN S.C.

REVIEWED E.L.

12-JK2-19A

SKILLING, HELLE, CHRISTIANSEN, ROBERTSON — Structural & Civil Engineers

PROJECT: THE WORLD TRADE CENTER | TITLE: SHEAR STUD CONNECTOR TABLE FORMAT | DATE: 7-19-68

REVISIONS

9-20-68

DESCRIPTION OF SHEAR STUD CONNECTOR TABLES 1, 2 AND 3

BEAM - NOMINAL BEAM SIZE FROM A.I.S.C. LISTING

STUD - NOMINAL STUD SIZE (DIAMETER X LENGTH)

TABLE NO. 1 - THE NUMBER OF SHEAR STUDS CALCULATED USING FORMULA (19) A.I.S.C. FOR THE CONCRETE AND STEEL RANGE SHOWN

TABLE NO. 2 - SAME AS TABLE 1

TABLE NO. 3 - SAME AS TABLE 1

DESCRIPTION OF SHEAR STUD CONNECTOR TABLES 4, 5 AND 6

BEAM SIZE RANGE - NOMINAL BEAM SIZES FOR WHICH ADJACENT TABLES APPLY

STUD - NOMINAL STUD SIZE (DIAMETER X LENGTH)

SLAB T - THICKNESS OF CONCRETE SLAB

TABLE NO. 4 - THE NUMBER OF SHEAR STUDS CALCULATED USING FORMULA (18) A.I.S.C. FOR THE CONCRETE RANGE SHOWN

TABLE NO. 5 - SAME AS TABLE 4

TABLE NO. 6 - SAME AS TABLE 4

USE OF TABLES

1. REQUIRED: NOMINAL BEAM SIZE AND YIELD STRENGTH OF THE STEEL BEAM; COMPRESSIVE STRENGTH AND THICKNESS OF THE CONCRETE SLAB.
2. A STUD COUNT CAN BE SELECTED FROM TABLES 1, 2 OR 3 USING ONLY THE FIRST THREE OF THE ABOVE REQUIREMENTS.
3. A STUD COUNT SELECTION IS MADE ALSO FROM TABLES 4, 5 OR 6 USING THE ABOVE REQUIREMENTS EXCEPT FOR YIELD STRENGTH OF THE STEEL BEAM. WHERE SLAB THICKNESSES EXCEED THE SCOPE OF THESE TABLES, USE THE STUD COUNT FOR THE LARGEST TABULATED SLAB THICKNESS.
4. TWICE THE SMALLER OF THE TWO VALUES OBTAINED IN STEPS 2 AND 3 IS THE TOTAL NUMBER OF STUDS REQUIRED.

NOTES:

1. WHERE A SYMBOL ( ) IS SHOWN ON PLANS, SEE STUD SCHEDULE ON 12-JK2-8.
   FOR 300 SERIES, SEE SCHEDULE B ON 12-JK2-18.
   FOR 400 SERIES, SEE SCHEDULE C ON 12-JK2-19.
2. STUD SPACINGS: LONGITUDINAL - 2'-0" MAX. 3" MIN.
   TRANSVERSE - 1-7/8" MIN.
   DISTANCE FROM EDGE OF FLANGES - 1" MIN.
3. SHEAR CONNECTORS FOR BEAMS AT EL. 264, SEE 12-JK2-5.

LICENSED PROFESSIONAL ENGINEER STATE OF NEW YORK

DESIGNED

DRAWN

REVIEWED

12-JK2- 20

SKILLING HELLE CHRISTIANSEN ROBERTSON — CIVIL & STRUCTURAL ENGINEERS

PROJECT THE WORLD TRADE CENTER | TITLE STUD SHEAR CONNECTOR TABLES | DATE 7/19/68

REVISIONS

BEAM	STUD	TABLE NO. 1 STONE F'C=3000 FY=36	TABLE NO. 1 STONE F'C=3000 FY=42	TABLE NO. 2 STONE F'C=4000 FY=36	TABLE NO. 2 STONE F'C=4000 FY=42	TABLE NO. 2 STONE F'C=4000 FY=50	TABLE NO. 3 LIGHT WEIGHT F'C=3000 FY=36	TABLE NO. 3 LIGHT WEIGHT F'C=3000 FY=42	TABLE NO. 3 LIGHT WEIGHT F'C=3000 FY=45	TABLE NO. 3 LIGHT WEIGHT F'C=3000 FY=50	TABLE NO. 3 LIGHT WEIGHT F'C=3000 FY=60
36 WF 300	3/4 X 3	138	161	120	140	166	163	190	203	226	271
36 WF 280	3/4 X 3	129	151	112	130	155	152	177	190	211	253
36 WF 260	3/4 X 3	120	140	104	121	144	141	165	177	196	235
36 WF 245	3/4 X 3	113	132	98	114	136	133	155	166	185	222
36 WF 230	3/4 X 3	107	124	92	107	128	125	146	156	174	208
36 WF 194	3/4 X 3	90	105	78	91	108	106	123	132	147	176
36 WF 182	3/4 X 3	84	98	73	85	101	99	116	124	137	165
36 WF 170	3/4 X 3	79	92	68	79	94	93	108	116	128	154
36 WF 160	3/4 X 3	74	86	64	75	89	87	102	109	121	145
36 WF 150	3/4 X 3	70	81	60	70	83	82	95	102	113	136
36 WF 135	3/4 X 3	63	73	54	63	75	74	86	92	102	122
33 WF 240	3/4 X 3	111	129	96	112	133	130	152	163	181	217
33 WF 220	3/4 X 3	102	119	88	103	122	120	140	149	166	199
33 WF 200	3/4 X 3	93	108	80	93	111	109	127	136	151	181
33 WF 152	3/4 X 3	70	82	61	71	85	83	97	103	115	138
33 WF 141	3/4 X 3	65	76	57	66	79	77	90	96	107	128
33 WF 130	3/4 X 3	60	70	52	61	72	71	83	89	98	118
33 WF 118	3/4 X 3	55	64	47	55	66	64	75	80	89	107
30 WF 210	3/4 X 3	97	113	84	98	117	114	133	143	158	190
30 WF 190	3/4 X 3	88	103	76	89	106	103	121	129	143	172
30 WF 172	3/4 X 3	80	93	69	80	96	94	109	117	130	156
30 WF 132	3/4 X 3	61	71	53	62	73	72	84	90	100	120
30 WF 124	3/4 X 3	58	67	50	58	69	68	79	84	94	112
30 WF 116	3/4 X 3	54	63	47	54	65	63	74	79	88	105
30 WF 108	3/4 X 3	50	59	43	51	60	59	69	74	82	98
30 WF 99	3/4 X 3	46	54	40	46	55	54	63	67	75	90
27 WF 177	3/4 X 3	82	96	71	83	98	96	112	120	134	160
27 WF 160	3/4 X 3	74	86	64	75	89	87	102	109	121	145
27 WF 145	3/4 X 3	67	78	58	68	81	79	92	99	110	131
27 WF 114	3/4 X 3	53	62	46	53	64	62	73	78	86	103
27 WF 102	3/4 X 3	47	55	41	48	57	56	65	70	77	93
27 WF 94	3/4 X 3	44	51	38	44	52	51	60	64	71	85
27 WF 84	3/4 X 3	39	46	34	40	47	46	54	57	64	76

LICENSED PROFESSIONAL ENGINEER ★ LESLIE E. ROBERTSON ★ No. 34360 ★ UNIVERSITY OF THE STATE OF NEW YORK

12-JK2- 21

SKILLING HELLE CHRISTIANSEN ROBERTSON — CIVIL & STRUCTURAL ENGINEERS

PROJECT: THE WORLD TRADE CENTER | TITLE: STUD SHEAR CONNECTOR TABLES | DATE: 7/19/68

REVISIONS

BEAM	STUD	TABLE NO. 1 STONE F'C=3000 FY=36	TABLE NO. 1 STONE F'C=3000 FY=42	TABLE NO. 2 STONE F'C=4000 FY=36	TABLE NO. 2 STONE F'C=4000 FY=42	TABLE NO. 2 STONE F'C=4000 FY=50	TABLE NO. 3 LIGHT WEIGHT F'C=3000 FY=36	TABLE NO. 3 LIGHT WEIGHT F'C=3000 FY=42	TABLE NO. 3 LIGHT WEIGHT F'C=3000 FY=45	TABLE NO. 3 LIGHT WEIGHT F'C=3000 FY=50	TABLE NO. 3 LIGHT WEIGHT F'C=3000 FY=60
24 WF 160	3/4 X 3	74	86	64	75	89	87	102	109	121	145
24 WF 145	3/4 X 3	67	78	58	68	81	79	92	99	109	131
24 WF 130	3/4 X 3	60	70	52	61	72	71	83	88	98	118
24 WF 120	3/4 X 3	56	65	48	56	67	65	76	82	91	109
24 WF 110	3/4 X 3	51	60	44	52	61	60	70	75	83	100
24 WF 100	3/4 X 3	47	54	40	47	56	55	64	68	76	91
24 WF 94	3/4 X 3	44	51	38	44	52	51	60	64	71	85
24 WF 84	3/4 X 3	39	46	34	40	47	46	54	57	64	76
24 WF 76	3/4 X 3	36	41	31	36	43	42	49	52	58	69
24 WF 68	3/4 X 3	32	37	28	32	38	37	43	47	52	62
21 WF 142	3/4 X 3	66	77	57	66	79	77	90	97	107	129
21 WF 127	3/4 X 3	59	69	51	59	71	69	81	86	96	115
21 WF 112	3/4 X 3	52	61	45	52	62	61	71	76	85	102
21 WF 96	3/4 X 3	45	52	39	45	54	52	61	65	73	87
21 WF 82	3/4 X 3	38	44	33	39	46	45	52	56	62	74
21 WF 73	3/4 X 3	34	40	30	34	41	40	47	50	55	66
21 WF 68	3/4 X 3	32	37	28	32	38	37	43	47	52	62
21 WF 62	3/4 X 3	29	34	25	29	35	34	40	42	47	56
21 WF 55	3/4 X 3	26	30	22	26	31	30	35	38	42	50
18 WF 114	3/4 X 3	53	62	46	53	63	62	72	78	86	103
18 WF 105	3/4 X 3	49	57	42	49	58	57	67	72	79	95
18 WF 96	3/4 X 3	45	52	39	45	54	52	61	65	73	87
18 WF 85	3/4 X 3	40	46	34	40	47	46	54	58	64	77
18 WF 77	3/4 X 3	36	42	31	36	43	42	49	53	58	70
18 WF 70	3/4 X 3	33	38	28	33	39	38	45	48	53	64
18 WF 64	3/4 X 3	30	35	26	30	36	35	41	44	49	58
18 WF 60	3/4 X 3	28	33	24	28	34	33	38	41	46	55
18 WF 55	3/4 X 3	26	30	22	26	31	30	35	38	42	50
18 WF 50	3/4 X 3	24	27	20	24	28	28	32	34	38	46
18 WF 45	3/4 X 3	21	25	18	21	25	25	29	31	34	41

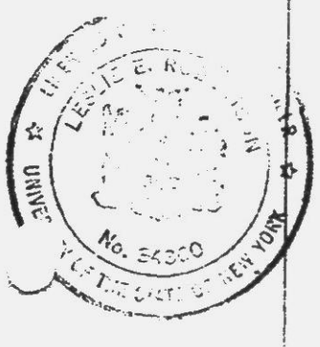

12-JK2- 22

SKILLING-HELLE-CHRISTIANSEN-ROBERTSON — Civil & Structural Engineers

PROJECT: THE WORLD TRADE CENTER | TITLE: STUD SHEAR CONNECTOR TABLES | DATE: 7/19/68

REVISIONS

BEAM	STUD	TABLE NO. 1 STONE F'C=3000 FY=36	TABLE NO. 1 STONE F'C=3000 FY=42	TABLE NO. 2 STONE F'C=4000 FY=36	TABLE NO. 2 STONE F'C=4000 FY=42	TABLE NO. 2 STONE F'C=4000 FY=50	TABLE NO. 3 LIGHT WEIGHT F'C=3000 FY=36	TABLE NO. 3 LIGHT WEIGHT F'C=3000 FY=42	TABLE NO. 3 LIGHT WEIGHT F'C=3000 FY=45	TABLE NO. 3 LIGHT WEIGHT F'C=3000 FY=50	TABLE NO. 3 LIGHT WEIGHT F'C=3000 FY=60
16 WF 96	3/4 X 3	45	52	39	45	54	52	61	65	73	87
16 WF 88	3/4 X 3	41	48	36	41	49	48	56	60	67	80
16 WF 78	3/4 X 3	36	42	32	37	44	43	50	53	59	71
16 WF 71	3/4 X 3	33	39	29	33	40	39	45	49	54	65
16 WF 64	3/4 X 3	30	35	26	30	36	35	41	44	49	58
16 WF 58	3/4 X 3	27	32	24	27	33	32	37	40	44	53
16 WF 50	3/4 X 3	23	27	20	24	28	28	32	34	38	46
16 WF 45	3/4 X 3	21	25	18	21	25	25	29	31	34	41
16 WF 40	3/4 X 3	19	22	16	19	23	22	26	28	31	37
16 WF 36	3/4 X 3	17	20	15	17	20	20	23	25	28	33
14 WF 136	3/4 X 3	63	73	55	64	76	74	86	93	103	123
14 WF 127	3/4 X 3	59	69	51	59	71	69	81	86	96	115
14 WF 119	3/4 X 3	55	64	48	56	66	65	76	81	90	108
14 WF 111	3/4 X 3	52	60	45	52	62	61	71	76	84	101
14 WF 103	3/4 X 3	48	56	41	48	57	56	65	70	78	93
14 WF 95	3/4 X 3	44	52	38	45	53	52	61	65	72	86
14 WF 87	3/4 X 3	40	47	35	41	49	48	55	59	66	79
14 WF 84	3/4 X 3	39	46	34	40	47	46	54	57	64	76
14 WF 78	3/4 X 3	36	42	32	37	44	43	50	53	59	71
14 WF 74	3/4 X 3	35	40	30	35	41	41	47	51	56	67
14 WF 68	3/4 X 3	32	37	28	32	38	37	43	47	52	62
14 WF 61	3/4 X 3	29	33	25	29	34	34	39	42	46	56
14 WF 53	3/4 X 3	25	29	22	25	30	29	34	36	40	48
14 WF 48	3/4 X 3	23	26	20	23	27	26	31	33	37	44
14 WF 43	3/4 X 3	20	24	18	20	24	24	28	30	33	39
14 WF 38	3/4 X 3	18	21	16	18	21	21	24	26	29	35
14 WF 34	3/4 X 3	16	19	14	16	19	19	22	24	26	31
14 WF 30	3/4 X 3	14	17	12	14	17	17	19	21	23	28

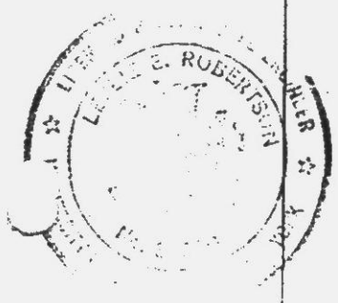

12-JK2- 23

SKILLING, HELLE, CHRISTIANSEN, ROBERTSON — CIVIL & STRUCTURAL ENGINEERS

PROJECT: THE WORLD TRADE CENTER | TITLE: STUD SHEAR CONNECTOR TABLES | DATE: 7/19/68

REVISIONS

BEAM	STUD	TABLE NO. 1 STONE F'C=3000 FY=36	TABLE NO. 1 STONE F'C=3000 FY=42	TABLE NO. 2 STONE F'C=4000 FY=36	TABLE NO. 2 STONE F'C=4000 FY=42	TABLE NO. 2 STONE F'C=4000 FY=50	TABLE NO. 3 LIGHT WEIGHT F'C=3000 FY=36	TABLE NO. 3 LIGHT WEIGHT F'C=3000 FY=42	TABLE NO. 3 LIGHT WEIGHT F'C=3000 FY=45	TABLE NO. 3 LIGHT WEIGHT F'C=3000 FY=50	TABLE NO. 3 LIGHT WEIGHT F'C=3000 FY=60
12 WF 99	3/4 X 3	46	54	40	46	55	54	63	67	75	90
12 WF 92	3/4 X 3	43	50	37	43	51	50	59	63	70	84
12 WF 85	3/4 X 3	40	46	34	40	47	46	54	58	64	77
12 WF 79	3/4 X 3	37	43	32	37	44	43	50	54	60	72
12 WF 72	3/4 X 3	34	39	29	34	40	39	46	49	55	65
12 WF 65	3/4 X 3	30	35	26	31	36	36	42	44	49	59
12 WF 58	3/4 X 3	27	32	24	27	33	32	37	40	44	53
12 WF 53	3/4 X 3	25	29	22	25	30	29	34	36	40	48
12 WF 50	3/4 X 3	24	27	20	24	28	28	32	34	38	46
12 WF 45	3/4 X 3	21	25	18	21	25	25	29	31	34	41
12 WF 40	3/4 X 3	19	22	16	19	23	22	26	28	31	37
12 WF 36	3/4 X 3	17	20	15	17	20	20	23	25	28	33
12 WF 31	3/4 X 3	15	17	13	15	18	17	20	21	24	28
12 WF 27	3/4 X 3	13	15	11	13	15	15	18	19	21	25
10 WF 112	3/4 X 3	52	61	45	52	62	61	71	76	85	102
10 WF 100	3/4 X 3	47	54	40	47	56	55	64	68	76	91
10 WF 89	3/4 X 3	41	48	36	42	50	49	57	61	67	81
10 WF 77	3/4 X 3	36	42	31	36	43	42	49	53	58	70
10 WF 72	3/4 X 3	34	39	29	34	40	39	46	49	55	65
10 WF 66	3/4 X 3	31	36	27	31	37	36	42	45	50	60
10 WF 60	3/4 X 3	28	33	24	28	34	33	38	41	46	55
10 WF 54	3/4 X 3	25	29	22	26	30	30	35	37	41	49
10 WF 49	3/4 X 3	23	27	20	23	28	27	31	34	37	45
10 WF 45	3/4 X 3	21	25	18	21	25	25	29	31	34	41
10 WF 39	3/4 X 3	18	21	16	19	22	22	25	27	30	36
10 WF 33	3/4 X 3	16	18	14	16	19	18	21	23	25	30
10 WF 29	3/4 X 3	14	16	12	14	17	16	19	20	22	27
10 WF 25	3/4 X 3	12	14	10	12	14	14	16	17	19	23
10 WF 21	3/4 X 3	10	12	9	10	12	12	14	15	16	19
8 WF 67	3/4 X 3	31	36	27	32	38	37	43	46	51	61
8 WF 58	3/4 X 3	27	32	24	27	33	32	37	40	44	53
8 WF 48	3/4 X 3	23	26	20	23	27	26	31	33	37	44
8 WF 40	3/4 X 3	19	22	16	19	23	22	26	28	31	37
8 WF 35	3/4 X 3	17	19	14	17	20	19	23	24	27	32
8 WF 31	3/4 X 3	15	17	13	15	18	17	20	21	24	28
8 WF 28	3/4 X 3	13	16	12	13	16	16	18	19	22	26
8 WF 24	3/4 X 3	12	13	10	12	14	13	16	17	19	22
6 WF 20	3/4 X 3	10	11	8	10	12	11	13	14	16	19
6 WF 17	3/4 X 3	8	10	7	8	10	10	11	12	13	16

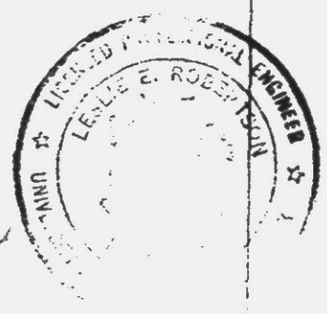

12-JK2- 24

SKILLING HELLE CHRISTIANSEN ROBERTSON — CIVIL & STRUCTURAL ENGINEERS

PROJECT THE WORLD TRADE CENTER | TITLE STUD SHEAR CONNECTOR TABLES | DATE 7/19/68

REVISIONS

BEAM	STUD	TABLE NO. 1 STONE F'C=3000 FY=36	TABLE NO. 1 STONE F'C=3000 FY=42	TABLE NO. 2 STONE F'C=4000 FY=36	TABLE NO. 2 STONE F'C=4000 FY=42	TABLE NO. 2 STONE F'C=4000 FY=50	TABLE NO. 3 LIGHT WEIGHT F'C=3000 FY=36	TABLE NO. 3 LIGHT WEIGHT F'C=3000 FY=42	TABLE NO. 3 LIGHT WEIGHT F'C=3000 FY=45	TABLE NO. 3 LIGHT WEIGHT F'C=3000 FY=50	TABLE NO. 3 LIGHT WEIGHT F'C=3000 FY=60
24 B 61.0	3/4 X 3	29	33	25	29	34	34	39	42	46	56
24 B 55.0	3/4 X 3	26	30	22	26	31	30	35	38	42	50
21 B 49.0	3/4 X 3	23	27	20	23	28	27	31	34	37	45
21 B 44.0	3/4 X 3	21	24	18	21	25	24	28	30	34	40
18 B 40.0	3/4 X 3	19	22	16	19	23	22	26	28	31	37
18 B 35.0	3/4 X 3	17	19	14	17	20	19	23	24	27	32
16 B 31.0	3/4 X 3	15	17	13	15	18	17	20	21	24	28
16 B 26.0	3/4 X 3	12	14	11	13	15	15	17	18	20	24
14 B 26.0	3/4 X 3	12	14	11	13	15	15	17	18	20	24
14 B 22.0	3/4 X 3	11	12	9	11	13	12	14	15	17	20
14 B 17.2	3/4 X 3	8	10	7	8	10	10	11	12	13	16
12 B 22.0	3/4 X 3	11	12	9	11	13	12	14	15	17	20
12 B 19.0	3/4 X 3	9	11	8	9	11	11	13	13	15	18
12 B 16.5	3/4 X 3	8	9	7	8	10	9	11	12	13	15
12 B 14.0	3/4 X 3	7	8	6	7	8	8	9	10	11	13
10 B 19.0	3/4 X 3	9	11	8	9	11	11	13	13	15	18
10 B 17.0	3/4 X 3	8	10	7	8	10	10	11	12	13	16
10 B 15.0	3/4 X 3	7	9	6	7	9	9	10	11	12	14
10 B 11.5	5/8 X 2-1/2	8	9	7	8	10	9	11	12	13	15
8 B 15.0	3/4 X 3	7	9	6	7	9	9	10	11	12	14
8 B 13.0	3/4 X 3	6	7	6	7	8	8	9	9	10	12
8 B 10.0	5/8 X 2-1/2	7	8	6	7	9	8	10	10	11	14
6 B 16.0	3/4 X 3	8	9	7	8	9	9	11	11	13	15
6 B 12.0	3/4 X 3	6	7	5	6	7	7	8	9	10	11
6 B 8.5	5/8 X 2-1/2	6	7	5	6	7	7	8	9	10	12

12-JK2-

SKILLING HELLE CHRISTIANSEN ROBERTSON — Civil & Structural Engineers

REVISIONS

PROJECT: THE WORLD TRADE CENTER

TITLE: STUD SHEAR CONNECTOR TABLES

DATE: 7/19/68

BEAM SIZE RANGE	STUD	SLAB T(IN.)	TABLE NO. 4 STONE F'C=3000	TABLE NO. 5 STONE F'C=4000	TABLE NO. 6 LIGHT WEIGHT F'C=3000
36WF300 - 36WF230	3/4 X 3	4.50	45	51	52
		5.00	54	62	63
		5.50	64	74	75
		6.00	75	87	89
		7.00	100	115	118
		8.00	129	148	151
		11.00	230	266	271
36WF194 - 36WF135	3/4 X 3	4.50	42	49	50
		5.00	51	59	60
		5.50	61	71	72
		6.00	72	83	85
		7.00	97	111	114
		8.00	125	144	147
		9.00	149	172	176
33WF240 - 33WF200	3/4 X 3	4.50	44	51	52
		5.00	54	62	63
		5.50	64	73	75
		6.00	75	86	88
		7.00	100	115	117
		8.00	128	147	150
		9.75	184	213	217
33WF152 - 33WF118	3/4 X 3	4.50	42	49	50
		5.00	51	59	60
		5.50	61	70	72
		6.00	72	83	85
		7.00	96	111	113
		7.75	117	135	138

LICENSED PROFESSIONAL ENGINEER ★ LESLIE E. ROBERTSON ★ UNIVERSITY OF THE STATE OF NEW YORK

12-JK2- 26

SKILLING HELLE CHRISTIANSEN ROBERTSON — Civil & Structural Engineers

PROJECT: THE WORLD TRADE CENTER

TITLE: STUD SHEAR CONNECTOR TABLES

DATE: 7/19/68

REVISIONS

BEAM SIZE RANGE	STUD	SLAB T(IN.)	TABLE NO. 4 STONE F'C=3000	TABLE NO. 5 STONE F'C=4000	TABLE NO. 6 LIGHT WEIGHT F'C=3000
30WF210 - 30WF172	3/4 X 3	4.50	44	51	52
		5.00	53	61	62
		5.50	63	73	74
		6.00	74	86	87
		7.00	99	114	116
		8.00	127	147	150
		9.25	162	186	190
30WF132 - 30WF 99	3/4 X 3	4.50	42	48	49
		5.00	51	58	60
		5.50	61	70	71
		6.00	71	82	84
		7.00	96	110	112
		7.25	102	117	120
27WF177 - 27WF145	3/4 X 3	4.50	43	50	51
		5.00	53	61	62
		5.50	63	72	74
		6.00	74	85	87
		7.00	98	113	116
		8.00	126	146	149
		8.50	136	157	160
27WF114 - 27WF 84	3/4 X 3	4.50	41	48	49
		5.00	50	58	59
		5.50	60	69	71
		6.00	71	82	83
		6.75	88	101	103
24WF160 - 24WF130	3/4 X 3	4.50	43	50	51
		5.00	53	61	62
		5.50	63	72	74
		6.00	74	85	87
		7.00	98	113	116
		8.00	123	142	145
24WF120 - 24WF100	3/4 X 3	4.50	42	49	50
		5.00	51	59	60
		5.50	61	71	72
		6.00	72	83	85
		7.00	93	107	109
24WF 94 - 24WF 68	3/4 X 3	4.50	41	47	48
		5.00	50	57	59
		5.50	60	69	70
		6.00	70	81	83
		6.25	73	84	85

LICENSED PROFESSIONAL ENGINEER — LESLIE E. ROBERTSON — No. [illegible] — UNIVERSITY OF [illegible]

12-JK2- 27

SKILLING, HELLE, CHRISTIANSEN, ROBERTSON — Civil & Structural Engineers

PROJECT THE WORLD TRADE CENTER | TITLE STUD SHEAR CONNECTOR TABLES | DATE 7/19/68

REVISIONS

BEAM SIZE RANGE	STUD	SLAB T(IN.)	TABLE NO. 4 STONE F'C=3000	TABLE NO. 5 STONE F'C=4000	TABLE NO. 6 LIGHT WEIGHT F'C=3000
21WF142 - 21WF112	3/4 X 3	4.50	43	49	50
		5.00	52	60	61
		5.50	62	71	73
		6.00	73	84	86
		7.00	98	112	115
		7.50	109	126	129
21WF 96 - 21WF 82	3/4 X 3	4.50	41	47	48
		5.00	50	57	59
		5.50	60	69	70
		6.00	70	81	83
		6.25	74	85	87
21WF 73 - 21WF 55	3/4 X 3	4.50	41	47	48
		5.00	49	57	58
		5.50	56	65	66
18WF114 - 18WF 96	3/4 X 3	4.50	42	49	50
		5.00	51	59	60
		5.50	61	71	72
		6.00	72	83	85
		6.75	88	101	103
18WF 85 - 18WF 64	3/4 X 3	4.50	41	47	48
		5.00	50	57	58
		5.50	59	69	70
		6.00	66	76	77
18WF 60 - 18WF 45	3/4 X 3	4.50	40	46	47
		5.00	47	54	55

LICENSED PROFESSIONAL ENGINEER — LESLIE E. ROBERTSON — No. 04810 — UNIVERSITY OF THE — NEVADA

12-JK2- 28

SKILLING HELLE CHRISTIANSEN ROBERTSON — Civil & Structural Engineers

PROJECT: THE WORLD TRADE CENTER

TITLE: STUD SHEAR CONNECTOR TABLES

DATE: 7/19/68

REVISIONS

BEAM SIZE RANGE	STUD	SLAB T(IN.)	TABLE NO. 4 STONE F'C=3000	TABLE NO. 5 STONE F'C=4000	TABLE NO. 6 LIGHT WEIGHT F'C=3000
16WF 96 - 16WF 88	3/4 X 3	4.50	42	49	50
		5.00	51	59	60
		5.50	61	70	72
		6.00	72	83	85
		6.25	74	85	87
16WF 78 - 16WF 58	3/4 X 3	4.50	41	47	48
		5.00	50	57	58
		5.50	59	68	70
		5.75	60	69	71
16WF 50 - 16WF 36	3/4 X 3	4.50	39	45	46
14WF136 - 14WF 87	3/4 X 3	4.50	44	50	51
		5.00	53	61	62
		5.50	63	73	74
		6.00	74	85	87
		7.00	99	114	116
		7.25	105	121	123
14WF 84 - 14WF 78	3/4 X 3	4.50	42	49	50
		5.00	51	59	60
		5.50	61	71	72
		5.75	65	75	76
14WF 74 - 14WF 61	3/4 X 3	4.50	41	48	49
		5.00	50	58	59
		5.50	57	66	67
14WF 53 - 14WF 43	3/4 X 3	4.50	40	47	47
		4.75	41	47	48
14WF 38 - 14WF 30	3/4 X 3	4.50	30	34	35

LICENSED PROFESSIONAL ENGINEER
LESLIE E. ROBERTSON
No. 34360
UNIVERSITY OF THE STATE OF NEW YORK

12-JK2- 29

SKILLING, HELLE, CHRISTIANSEN, ROBERTSON — CIVIL & STRUCTURAL ENGINEERS

PROJECT: THE WORLD TRADE CENTER | TITLE: STUD SHEAR CONNECTOR TABLES | DATE: 7/19/68

REVISIONS

BEAM SIZE RANGE	STUD	SLAB T(IN.)	TABLE NO. 4 STONE F'C=3000	TABLE NO. 5 STONE F'C=4000	TABLE NO. 6 LIGHT WEIGHT F'C=3000
12WF 99 - 12WF 65	3/4 X 3	4.50	42	49	50
		5.00	51	59	60
		5.50	61	71	72
		6.00	72	83	85
		6.25	76	88	90
12WF 58 - 12WF 53	3/4 X 3	4.50	41	48	49
		4.75	45	52	53
12WF 50 - 12WF 40	3/4 X 3	4.50	39	45	46
12WF 36 - 12WF 27	3/4 X 3	4.50	28	32	33
10WF112 - 10WF 49	3/4 X 3	4.50	41	48	49
		5.00	50	58	59
		5.50	60	69	71
		6.00	71	82	83
		6.75	86	99	102
10WF 45 - 10WF 33	3/4 X 3	4.50	35	40	41
10WF 29 - 10WF 21	3/4 X 3	4.50	23	26	27
8WF 67 - 8WF 31	3/4 X 3	4.50	40	47	47
		5.00	49	57	58
		5.25	52	60	61
8WF 28 - 8WF 24	3/4 X 3	4.50	22	25	26
8WF 20 - 8WF 17	3/4 X 3	4.50	16	18	19

LICENSED PROFESSIONAL ENGINEER — LESLIE E. ROBERTSON — No. 34360 — STATE OF NEW YORK

12-JK2- 30

SKILLING HELLE CHRISTIANSEN ROBERTSON — Civil & Structural Engineers

PROJECT: THE WORLD TRADE CENTER | TITLE: STUD SHEAR CONNECTOR TABLES | DATE: 7/19/68

REVISIONS

BEAM SIZE RANGE	STUD	SLAB T(IN.)	TABLE NO. 4 STONE F'C=3000	TABLE NO. 5 STONE F'C=4000	TABLE NO. 6 LIGHT WEIGHT F'C=3000
24 B 61 - 24 B 55	3/4 X 3	4.50	40	46	47
		5.00	47	54	56
21 B 49 - 21 B 44	3/4 X 3	4.50	38	44	45
18 B 40 - 18 B 35	3/4 X 3	4.50	31	36	37
16 B 31 - 16 B 26	3/4 X 3	4.50	24	28	28
14 B 26 - 14 B 22	3/4 X 3	4.50	20	23	24
14 B 17 - 14 B 17	3/4 X 3	4.50	14	16	16
12 B 22 - 12 B 14	3/4 X 3	4.50	17	20	20
10 B 19 - 10 B 15	3/4 X 3	4.50	15	17	18
10 B 11.5	5/8 X 2-1/2	4.50	12	15	15
8 B 15 - 8 B 13	3/4 X 3	4.50	12	14	14
8 B 10	5/8 X 2-1/2	4.50	12	13	14
6 B 16 - 6 B 12	3/4 X 3	4.50	13	15	15
6 B 8.5	5/8 X 2-1/2	4.50	10	11	12

LICENSED PROFESSIONAL ENGINEER — LESLIE E. ROBERTSON — No. 34360 — UNIVERSITY OF THE STATE

12-JK2- 31

SKILLING - HELLE - CHRISTIANSEN - ROBERTSON — Structural & Civil Engineers

PROJECT THE WORLD TRADE CENTER | TITLE BEAM AND GIRDER DTLS. - SPRINKLER PIPE HOLES | DATE 6-7-68

REVISIONS

SCHEDULE - HOLES IN WEBS OF BEAMS & GIRDERS			
MARK	DIAMETER	℄ ELEV. OF HOLE	REINFORCEMENT REQUIRED
S-1	5"	288'-1"	none
S-2	10"	288'-0"	Detail a
S-3	5"	288'-0"	none
S-4	9"	287'-6"	none
S-5	9"	288'-6"	none
S-6	10"	288'-5"	Detail a
S-7	8"	288'-2"	none

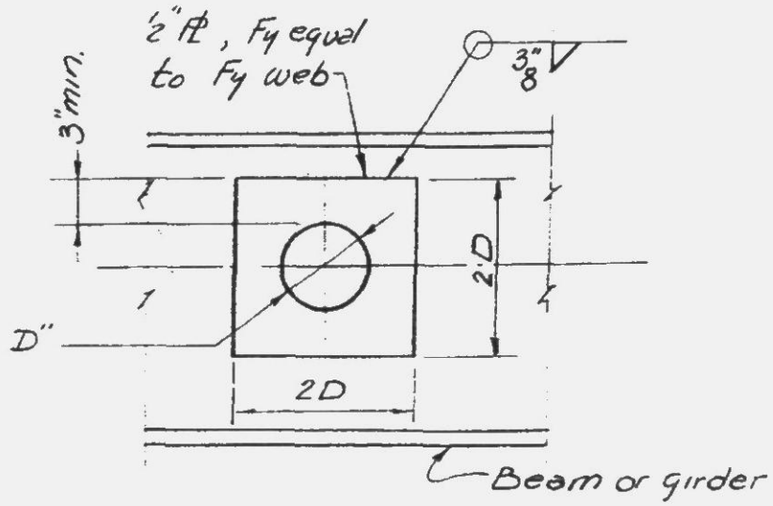

Detail a

For locations of holes, see Plans.

LICENSED PROFESSIONAL ENGINEER
LESLIE E. ROBERTSON
No. 34360
UNIVERSITY OF THE STATE OF NEW YORK

12-JK2-49

SKILLING - HELLE - CHRISTIANSEN - ROBERTSON Structural & Civil Engineers

PROJECT THE WORLD TRADE CENTER | TITLE DETAIL OF PLATE GIRDER | DATE 2-29-68

REVISIONS
4-5-68
6-28-68
1-3-69

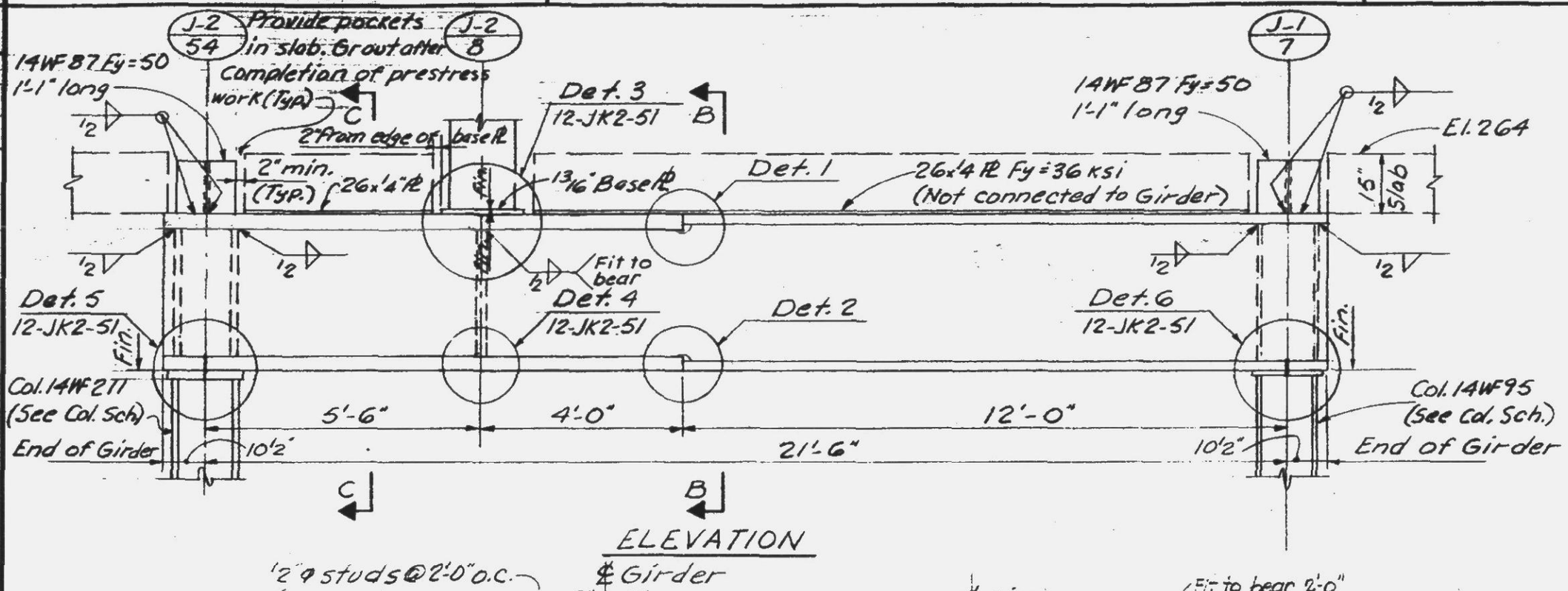

ELEVATION

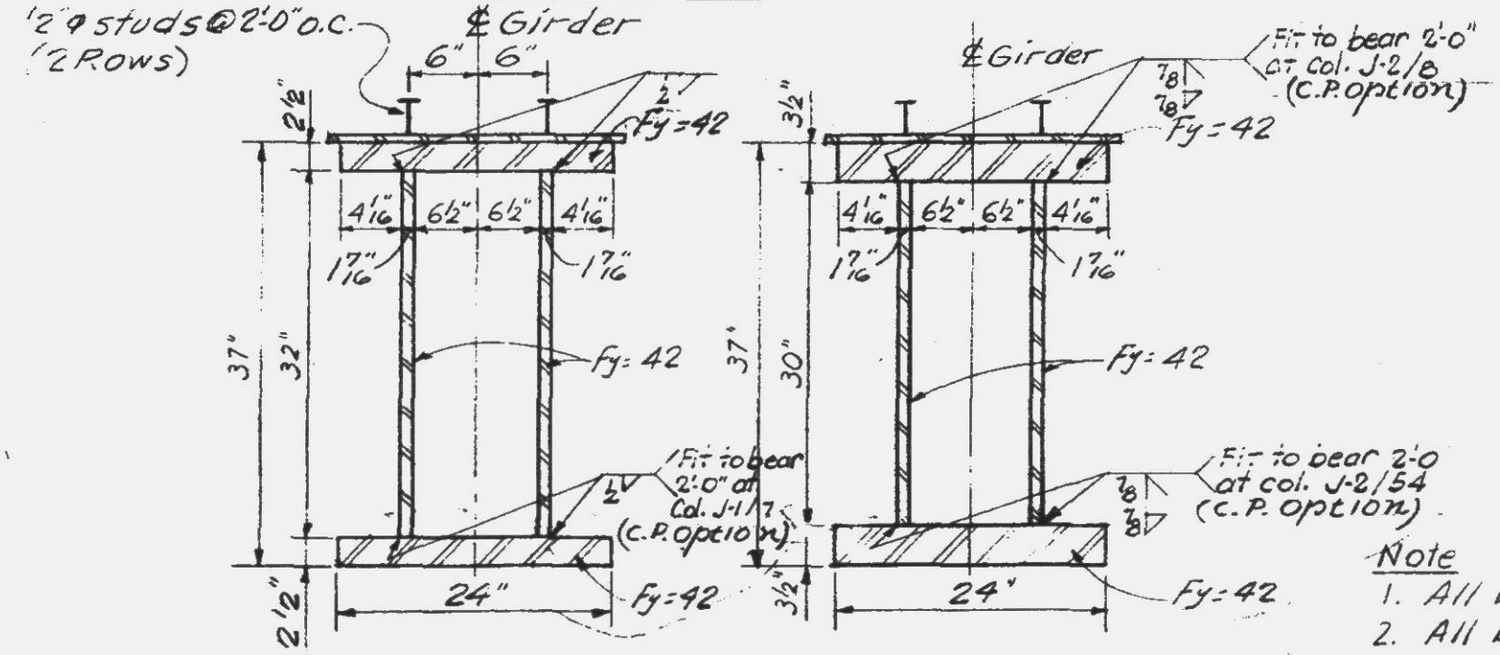

Section B-B Section C-C

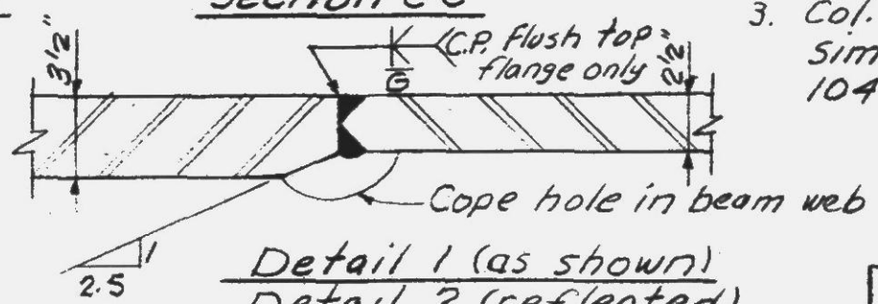

Detail 1 (as shown)
Detail 2 (reflected)

Note
1. All welds to be E70xx
2. All bolts to be A-325 friction type.
3. Col. cap Pl Detail Similar to Detail 104 (10-JK2-7.)

LICENSED PROFESSIONAL ENGINEER
LESLIE E. ROBERTSON
No. 34360
UNIVERSITY OF THE STATE OF NEW YORK

DRAWN S.T.M.
REVIEWED E.L.

12-JK2-50

SKILLING - HELLE - CHRISTIANSEN - ROBERTSON Structural & Civil Engineers

PROJECT THE WORLD TRADE CENTER | TITLE DETAIL OF PLATE GIRDER | DATE 2-29-68

REVISIONS

7-19-68

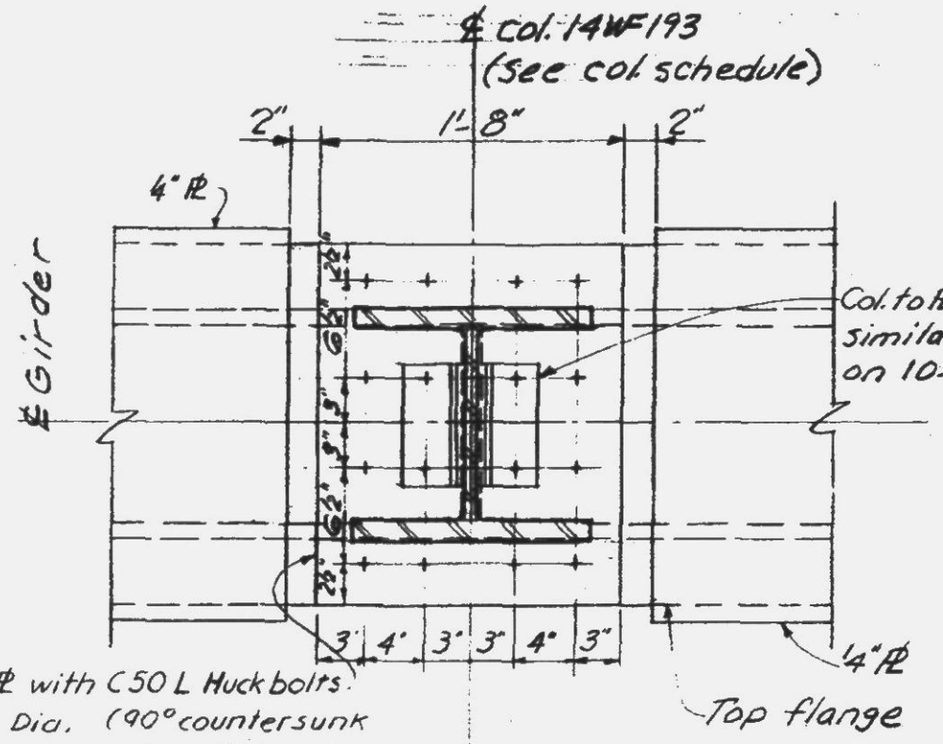

Detail 3

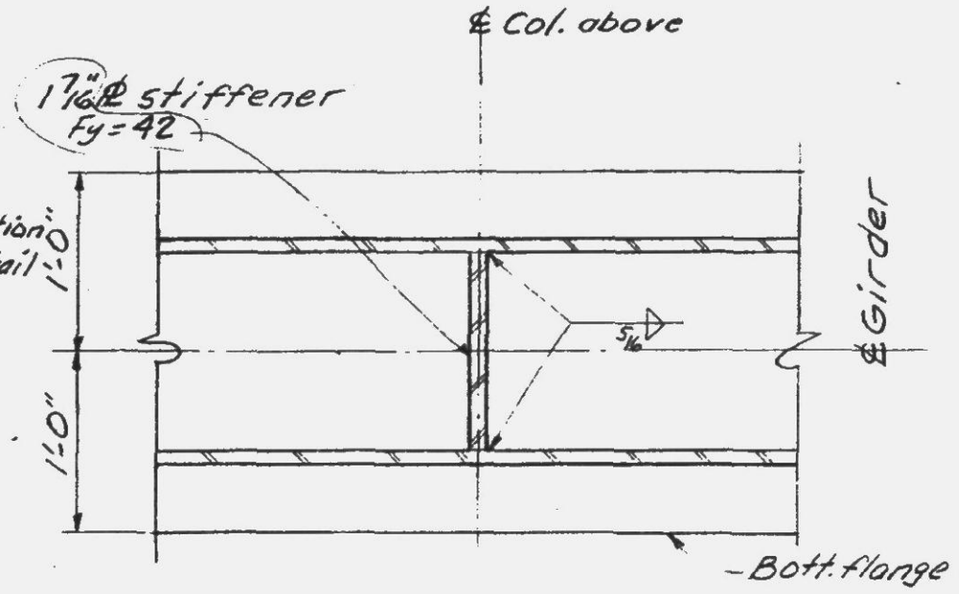

Detail 4

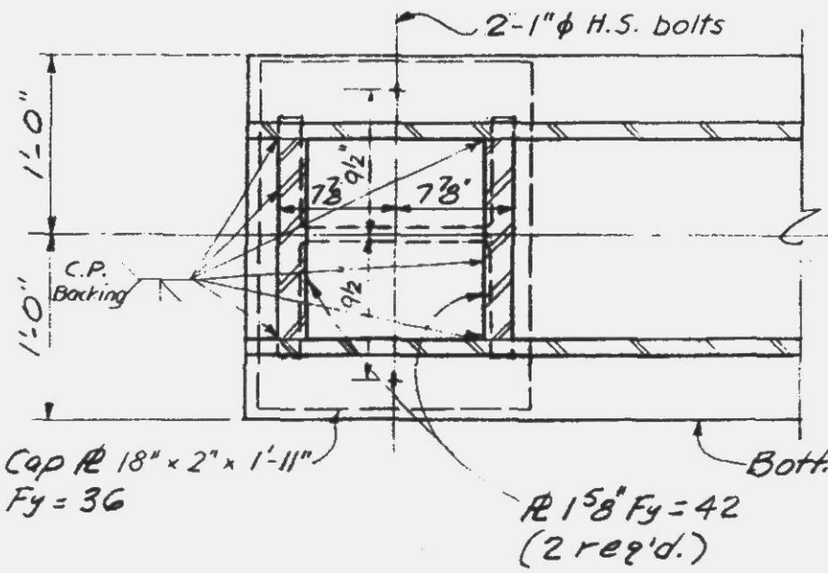

Detail 5

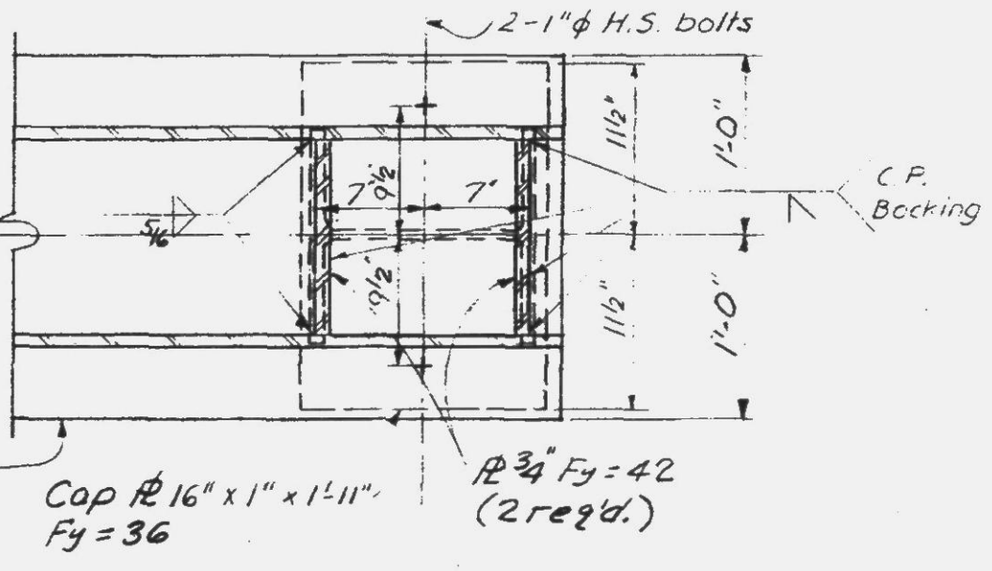

Detail 6

LICENSED PROFESSIONAL ENGINEER LESLIE E. ROBERTSON NO. 34360 STATE OF NEW YORK

12-JK2-51

SKILLING - HELLE - CHRISTIANSEN - ROBERTSON — Structural & Civil Engineers

PROJECT: THE WORLD TRADE CENTER | TITLE: DETAIL OF PLATE GIRDER | DATE: 2-29-68

REVISIONS
4-5-68
6-28-68
1-3-69

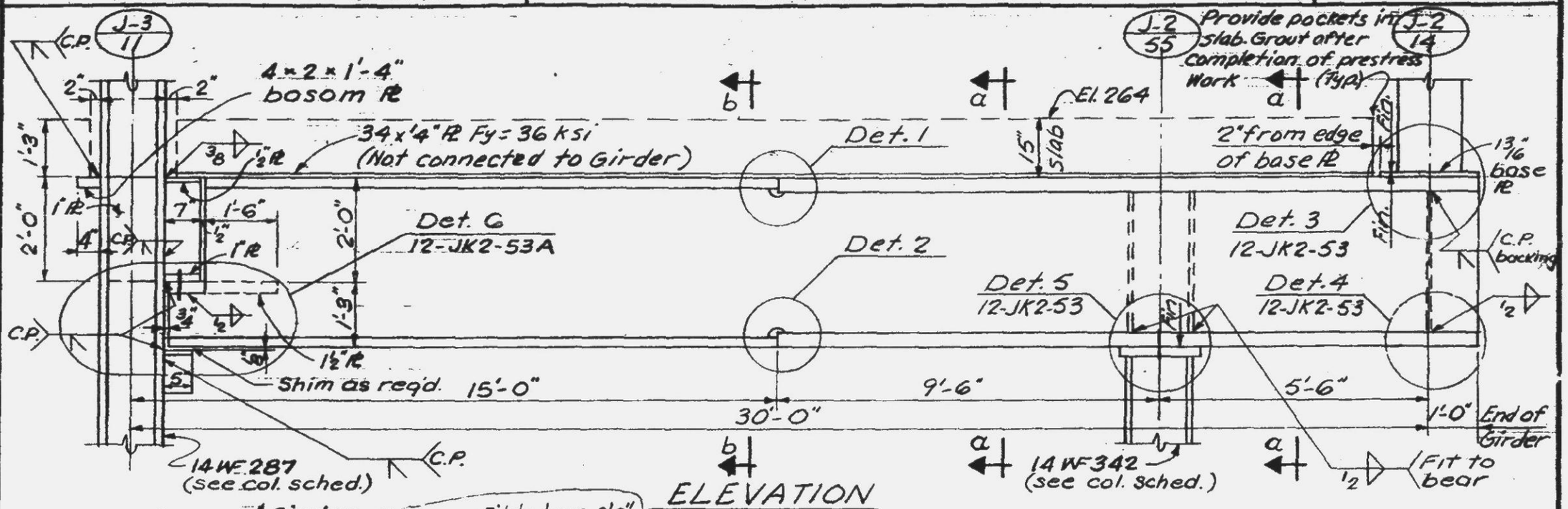

LICENSED PROFESSIONAL ENG'R. LESLIE E. ROBERTSON No. 34360 UNIVERSITY OF THE STATE OF NEW YORK

Notes:
1. All welds to be E70xx.
2. All bolts to be A-325 friction type.
3. Col. cap PL Detail similar to Detail 104 (10-JK2-7).

DRAWN S.T.M.
REVIEWED E.L.

12-JK2-52

SKILLING - HELLE - CHRISTIANSEN - ROBERTSON Structural & Civil Engineers

PROJECT THE WORLD TRADE CENTER | TITLE DETAIL OF PLATE GIRDER | DATE 2-29-68

REVISIONS

6-28-68

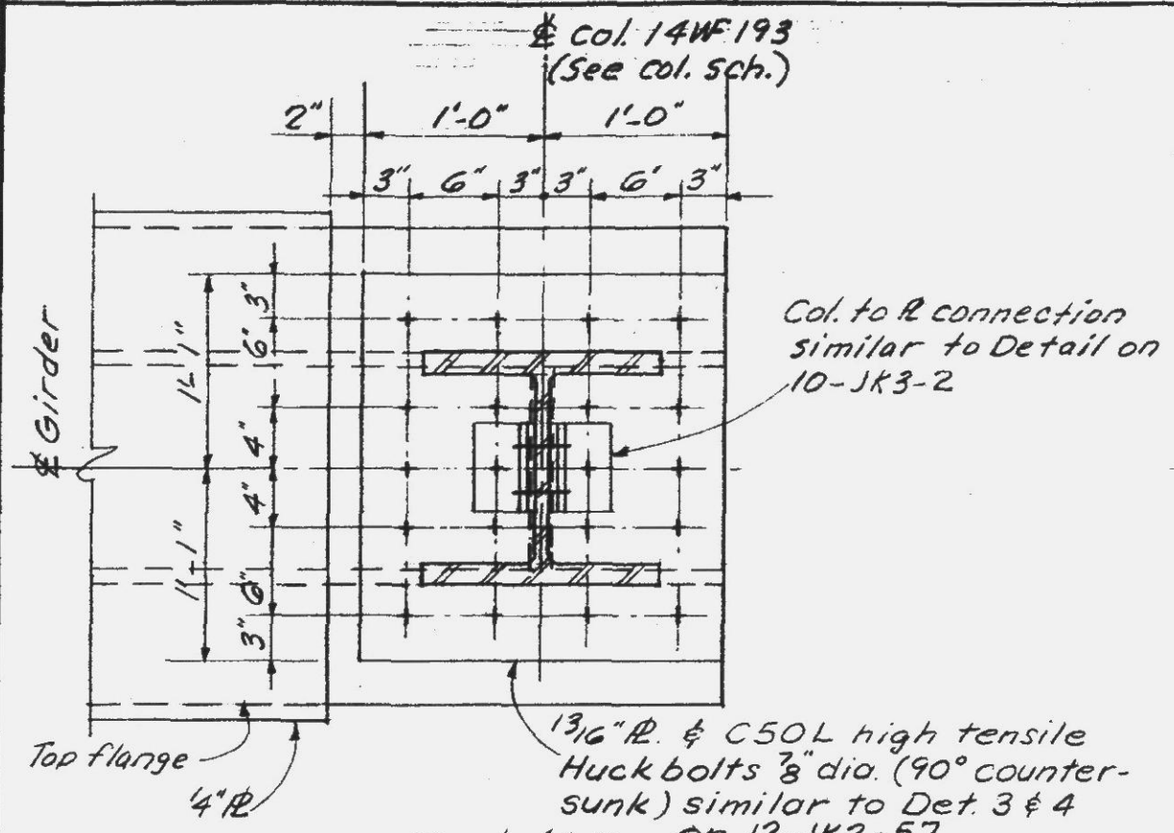

Detail 3

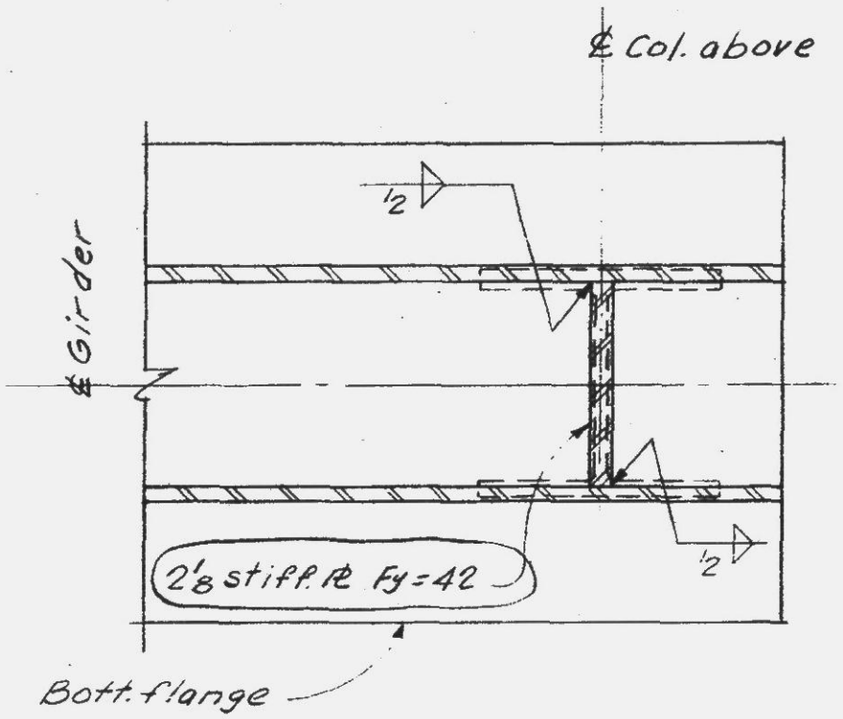

Detail 4

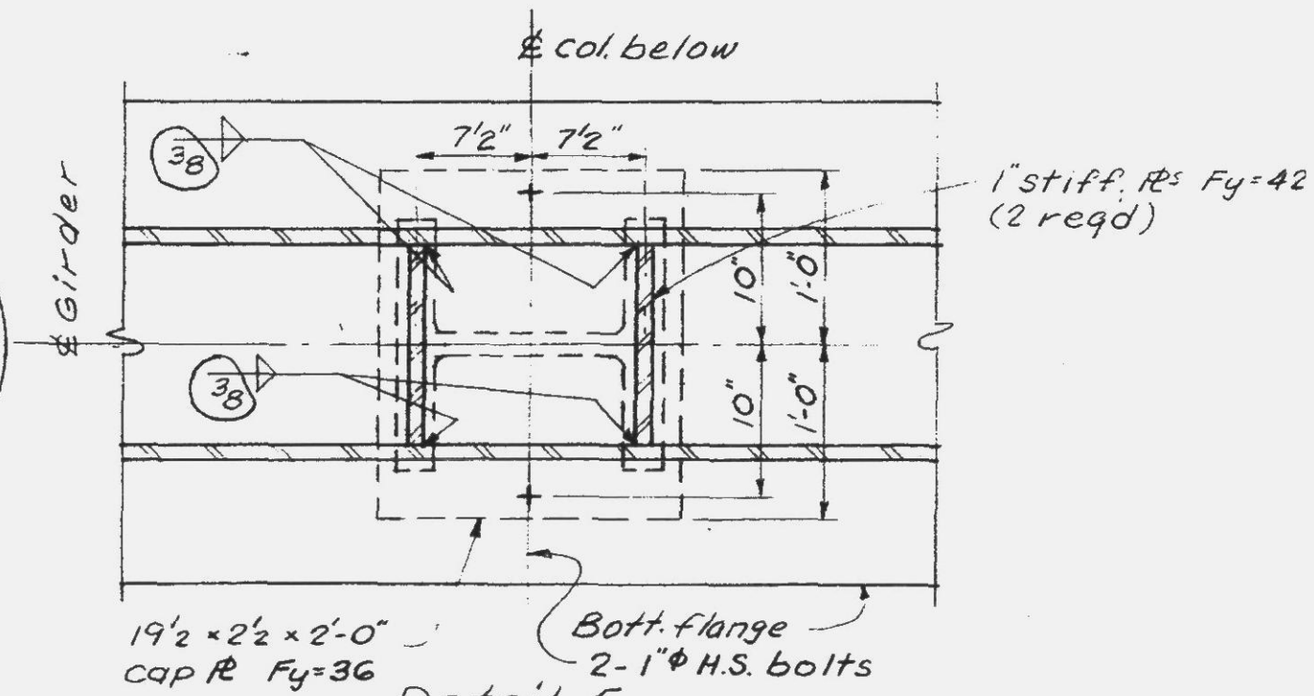

Detail 5

LICENSED PROFESSIONAL ENGINEER
LESLIE E. ROBERTSON
No. 34360
UNIVERSITY OF THE STATE OF NEW YORK

12-JK2-53

SKILLING - HELLE - CHRISTIANSEN - ROBERTSON Structural & Civil Engineers

PROJECT THE WORLD TRADE CENTER | TITLE DETAIL OF PLATE GIRDER | DATE 2-29-68

REVISIONS

6-28-68

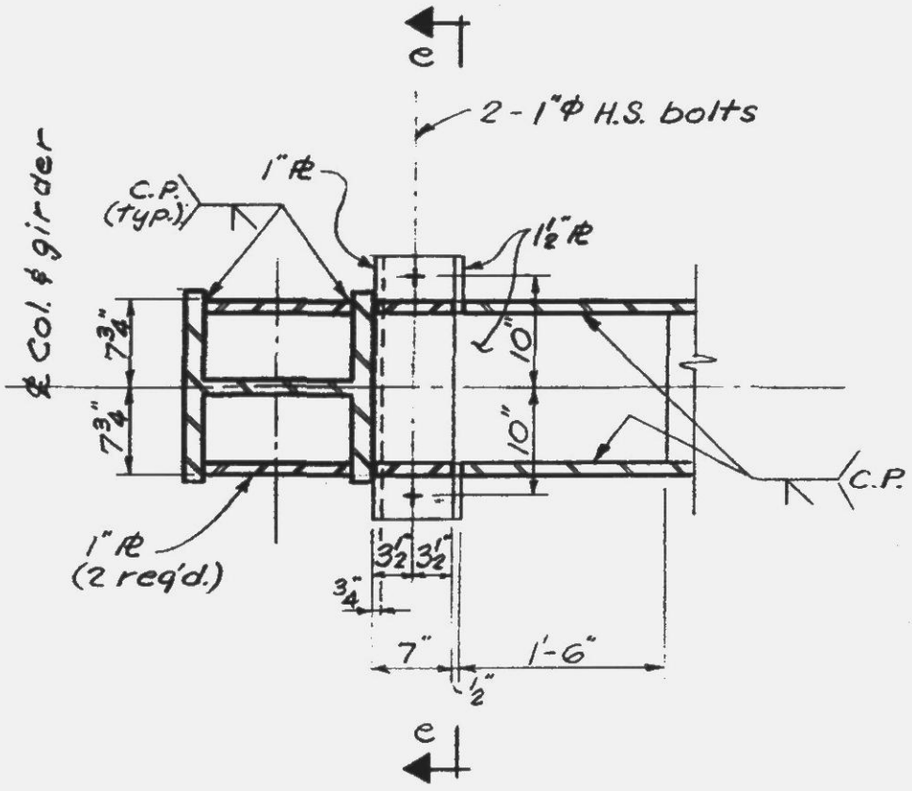

Detail 6

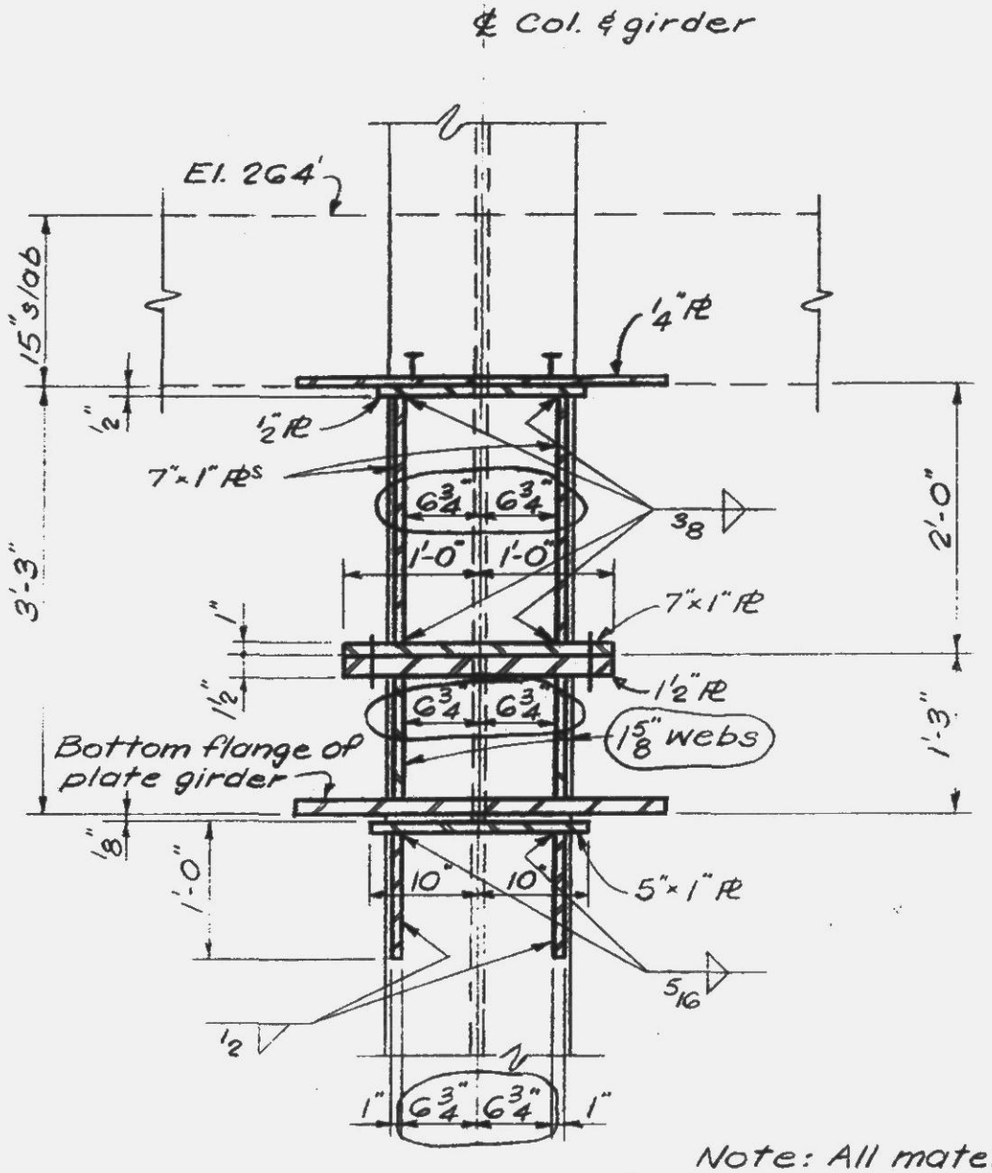

Note: All material Fy = 42 K.S.I.

Section e-e

LICENSED PROFESSIONAL ENGINEER
LESLIE E. ROBERTSON
No. 34360
UNIVERSITY OF THE STATE OF NEW YORK

12-JK2-53A

SKILLING - HELLE - CHRISTIANSEN - ROBERTSON — Structural & Civil Engineers

PROJECT: THE WORLD TRADE CENTER | TITLE: DETAIL OF PLATE GIRDER | DATE: 2-29-68

REVISIONS
4-5-68
6-28-68
1-3-69

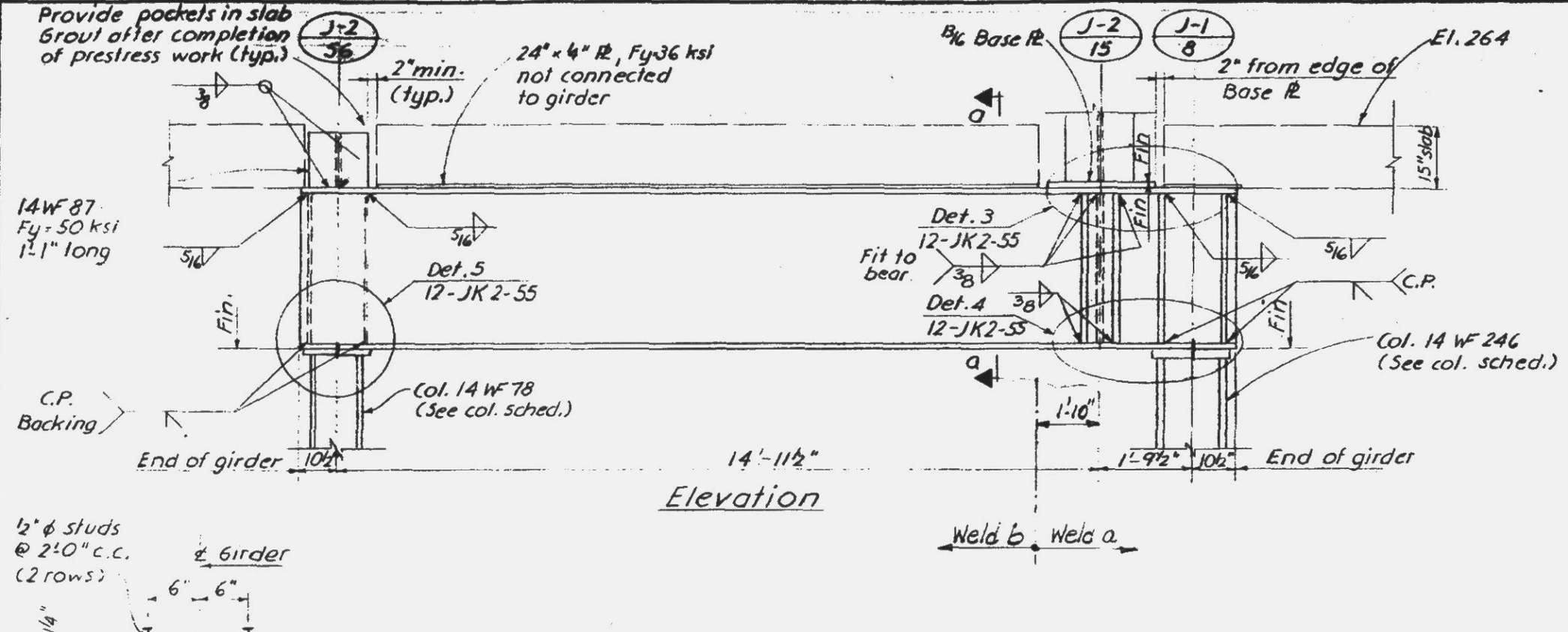

Elevation

Section a-a

Note:
1. All welds to be E70XX.
2. All bolts to be A325 friction type.
3. Col. cap Pl detail similar to Det. 104 (10-JK2-7)

LICENSED PROFESSIONAL ENGINEER — LESLIE E. ROBERTSON — No. 34360 — UNIVERSITY OF THE STATE OF NEW YORK

DRAWN S.T.M.
REVIEWED E.L.

12-JK2-54

SKILLING - HELLE - CHRISTIANSEN - ROBERTSON Structural & Civil Engineers

PROJECT THE WORLD TRADE CENTER | TITLE DETAIL OF PLATE GIRDER | DATE 2-29-68

REVISIONS

6-28-68

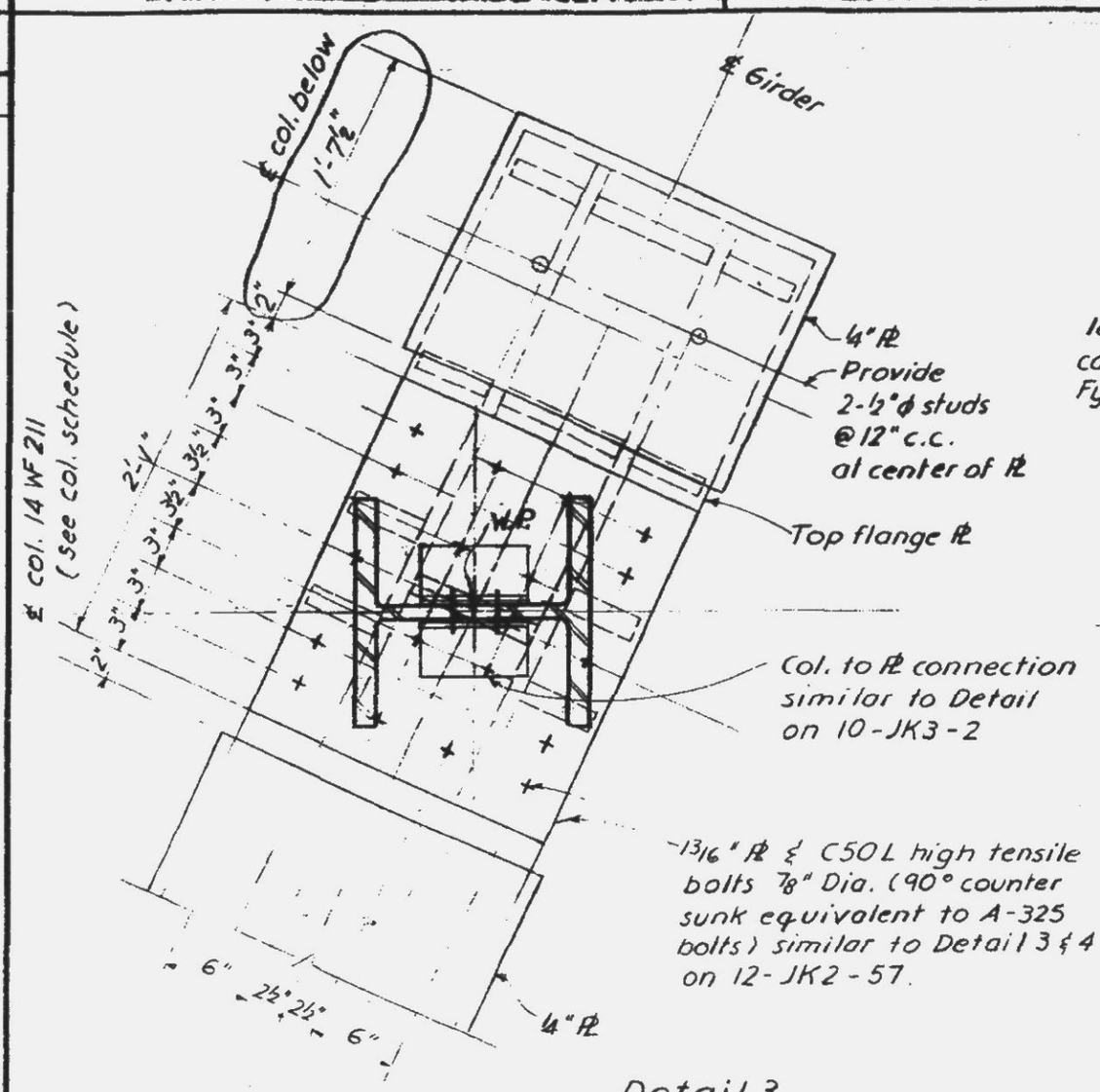

Detail 3

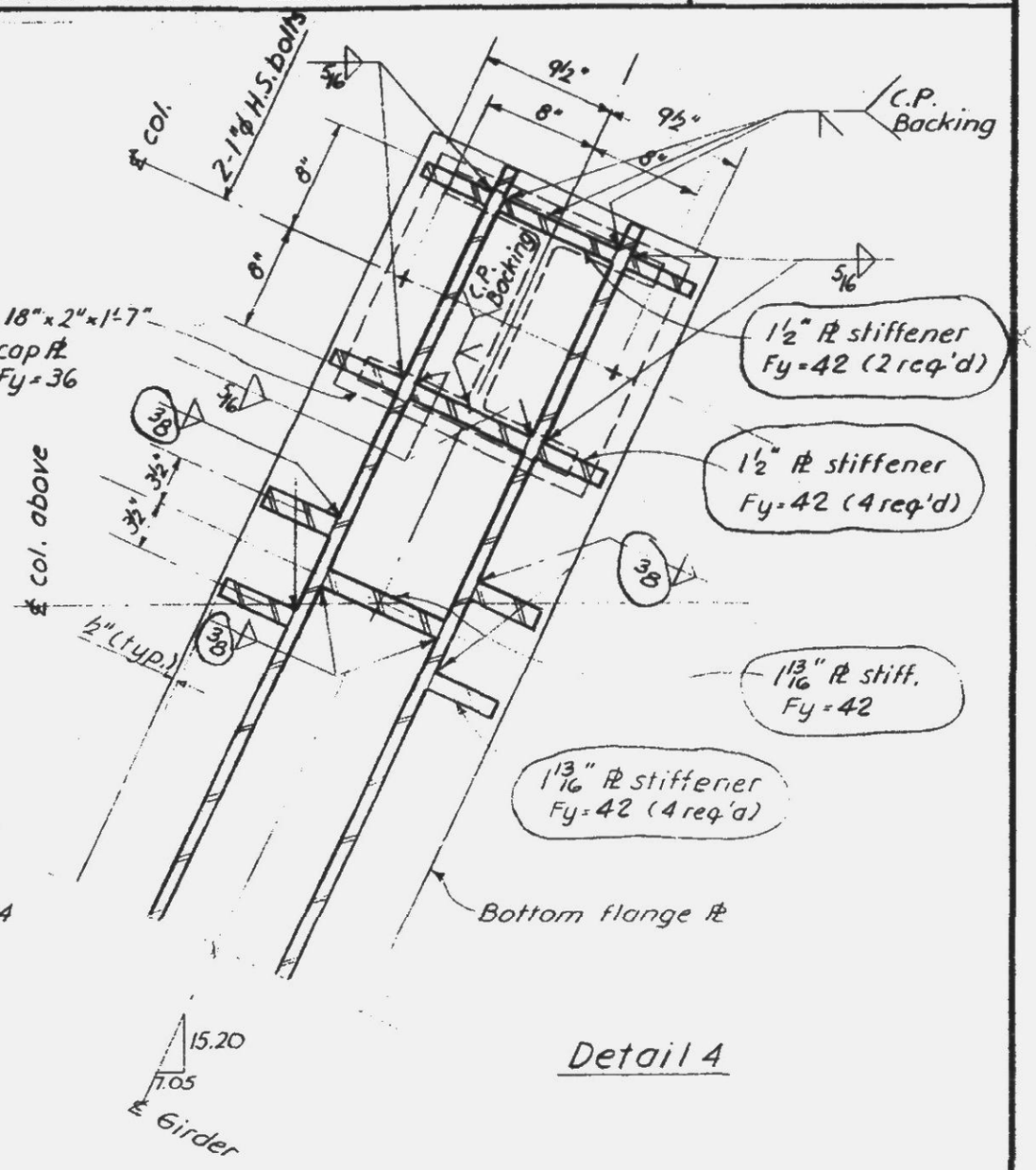

Detail 4

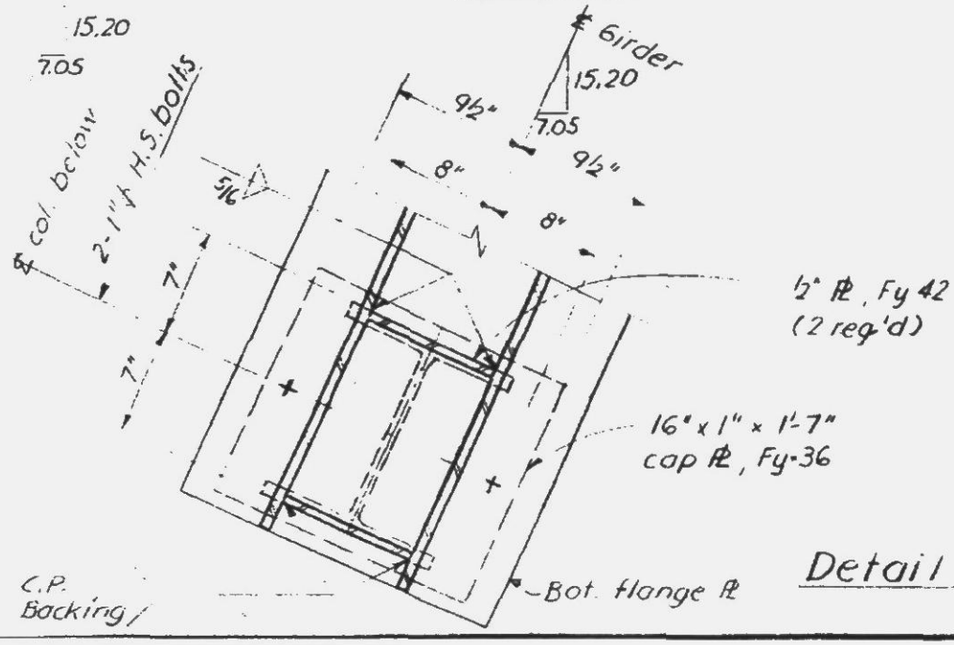

Detail 5

LICENSED PROFESSIONAL ENGINEER
LESLIE E. ROBERTSON
No. 34360
UNIVERSITY OF THE STATE OF NEW YORK

12-JK2-55

SKILLING - HELLE - CHRISTIANSEN - ROBERTSON — Structural & Civil Engineers

PROJECT THE WORLD TRADE CENTER | TITLE DETAIL OF PLATE GIRDER | DATE 2-29-68

REVISIONS
6-28-68
1-3-69

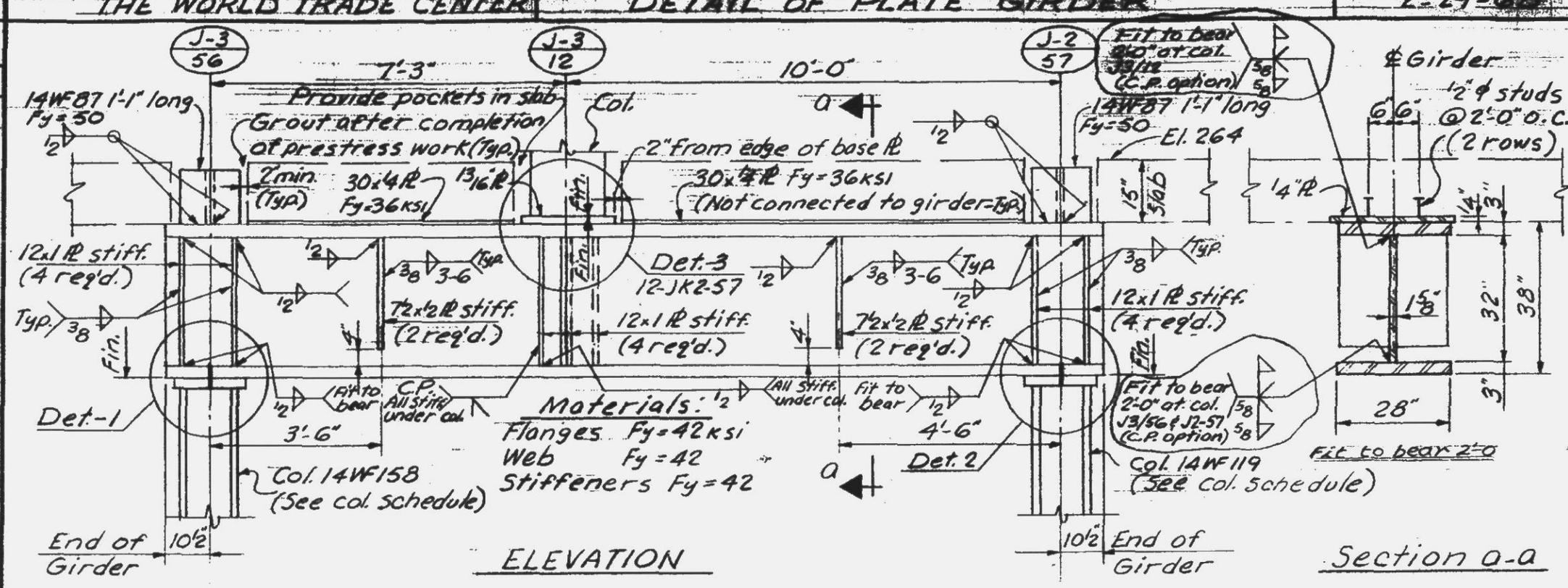

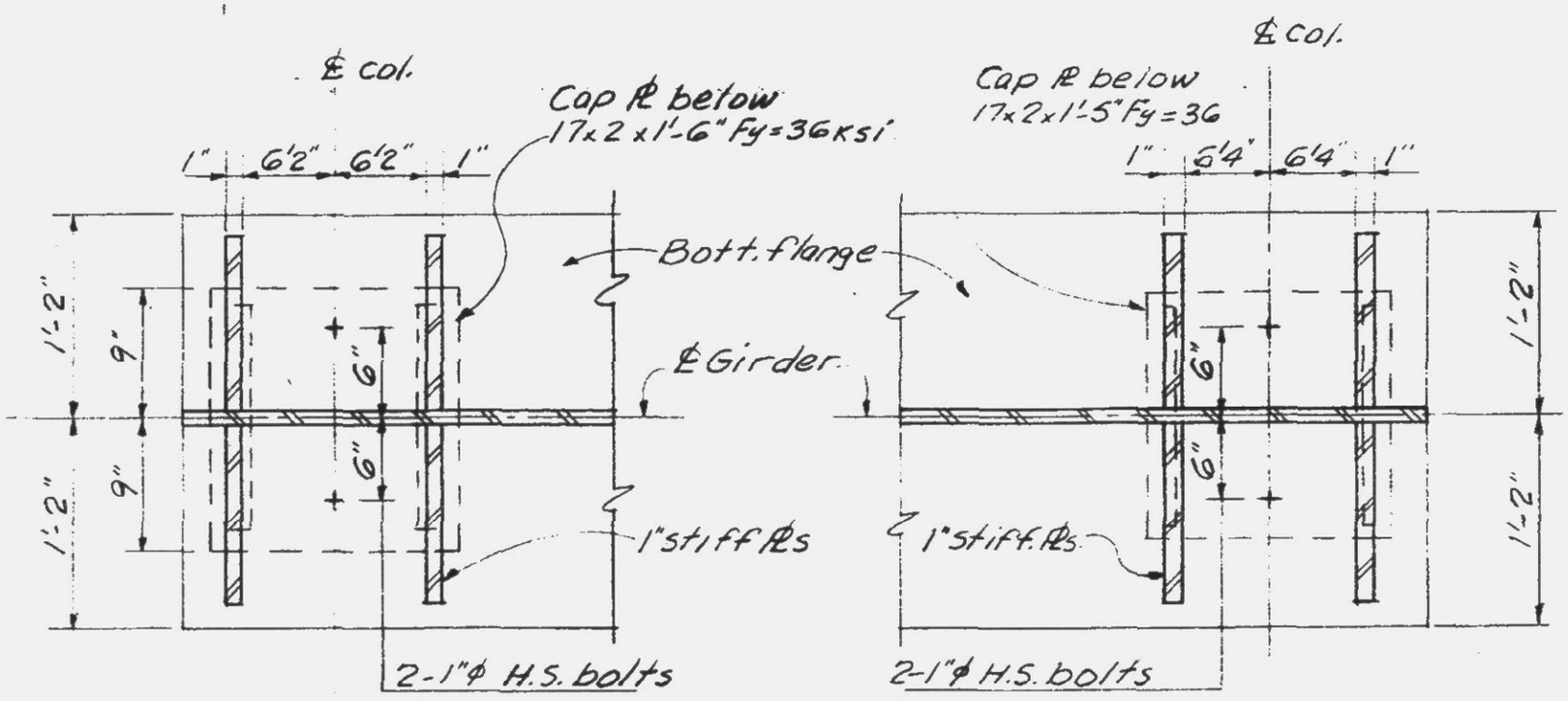

Notes:
1. All welds to be E70xx
2. All bolts to be A-325 friction type.
3. Col. cap Pl Detail similar to Detail 104 (10-JK2-7.)

LICENSED PROFESSIONAL ENGINEER — LESLIE E. ROBERTSON — No. 34360 — UNIVERSITY OF THE STATE OF NEW YORK

DRAWN S.T.M.
REVIEWED E.L.

12-JK2-56

SKILLING - HELLE - CHRISTIANSEN - ROBERTSON Structural & Civil Engineers

PROJECT THE WORLD TRADE CENTER | TITLE DETAIL OF PLATE GIRDER | DATE 2-29-68

REVISIONS

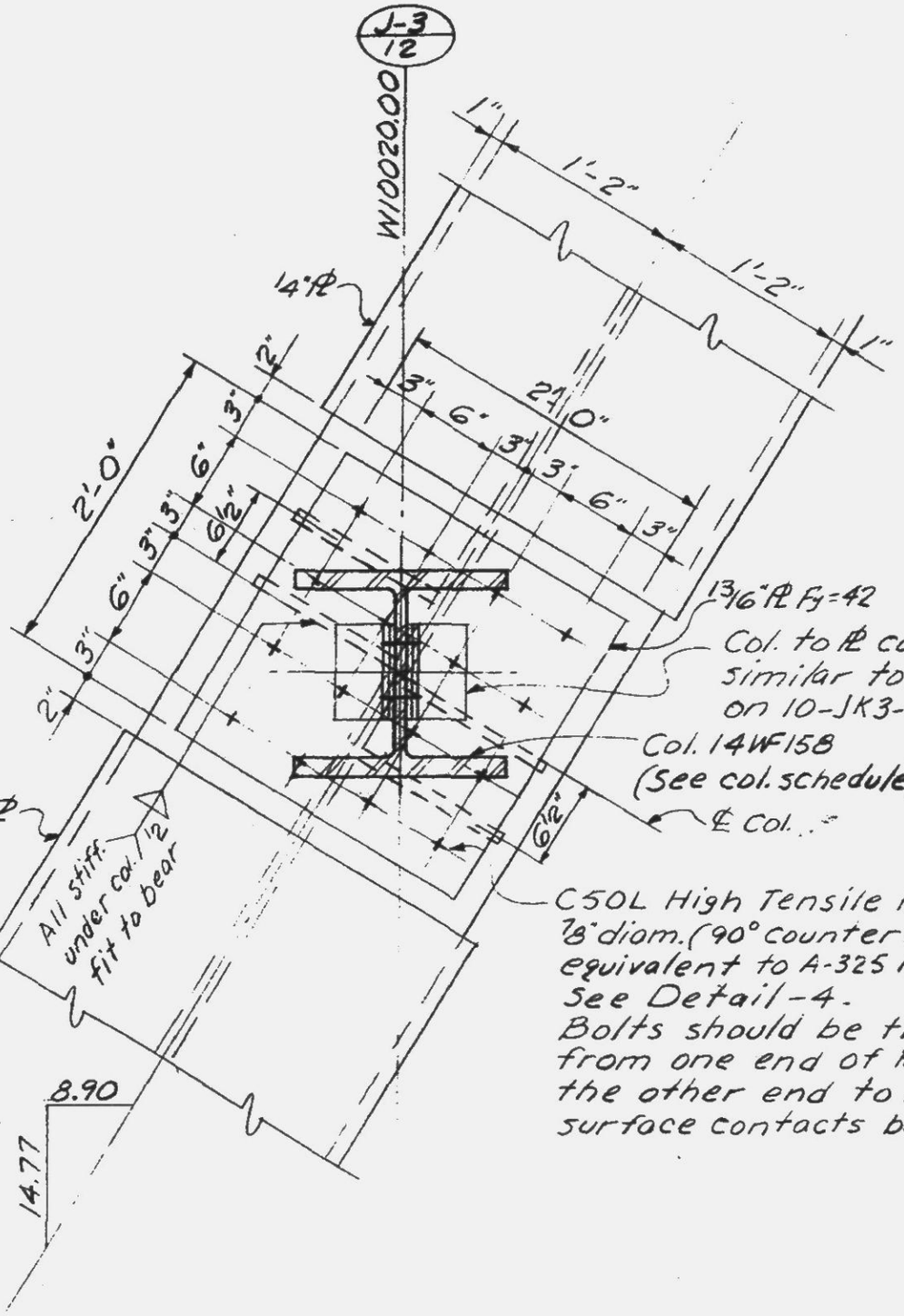

Detail - 3

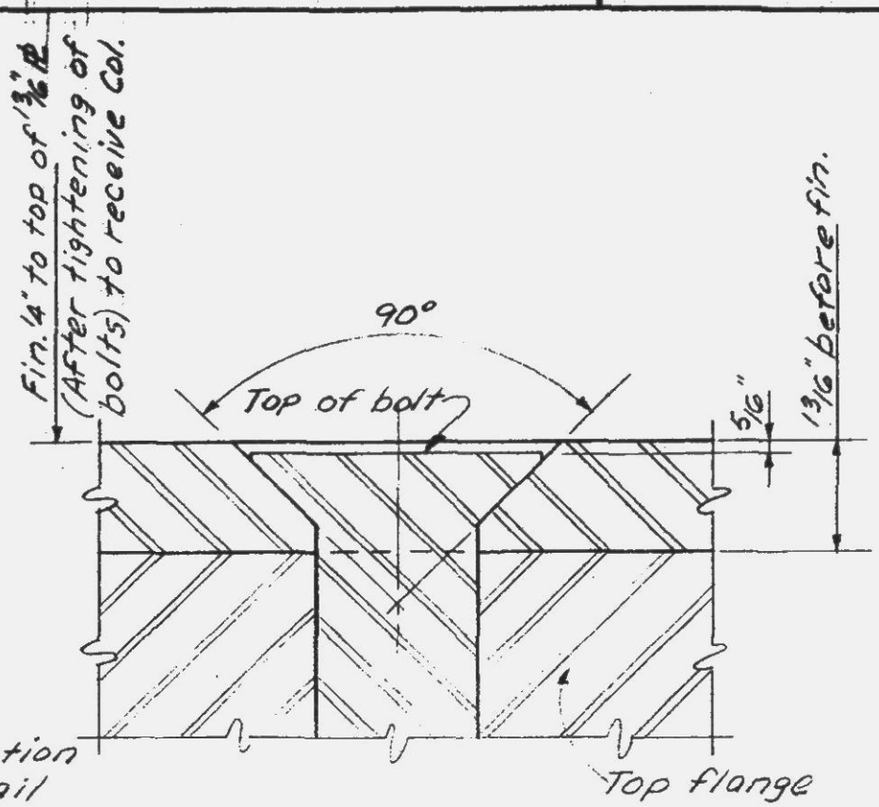

Detail - 4

LICENSED PROFESSIONAL ENGINEER
LESLIE E. ROBERTSON
NO. 34360
UNIVERSITY OF THE STATE OF NEW YORK

12-JK2-57

SKILLING, HELLE, CHRISTIANSEN, ROBERTSON — Structural & Civil Engineers

PROJECT: [illegible] LONG ISLAND EXPRESSWAY — TITLE: DETAIL OF PLATE GIRDER

DATE: [illegible]

REVISIONS
6-28-68
1-3-69

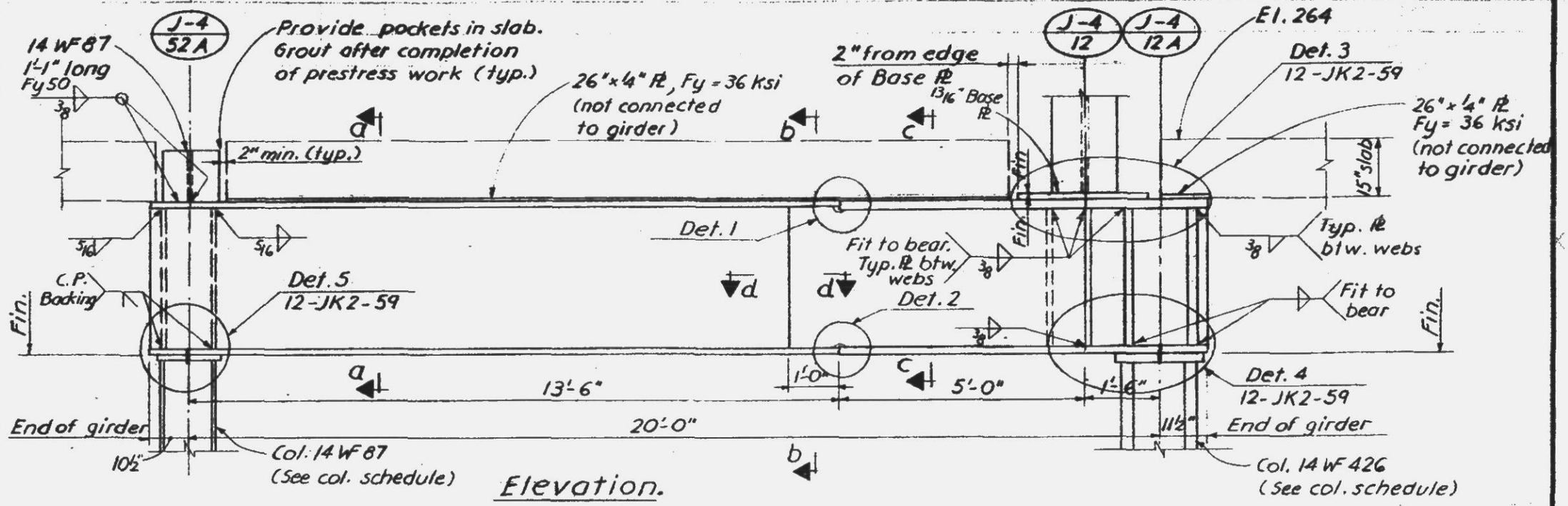

Elevation.

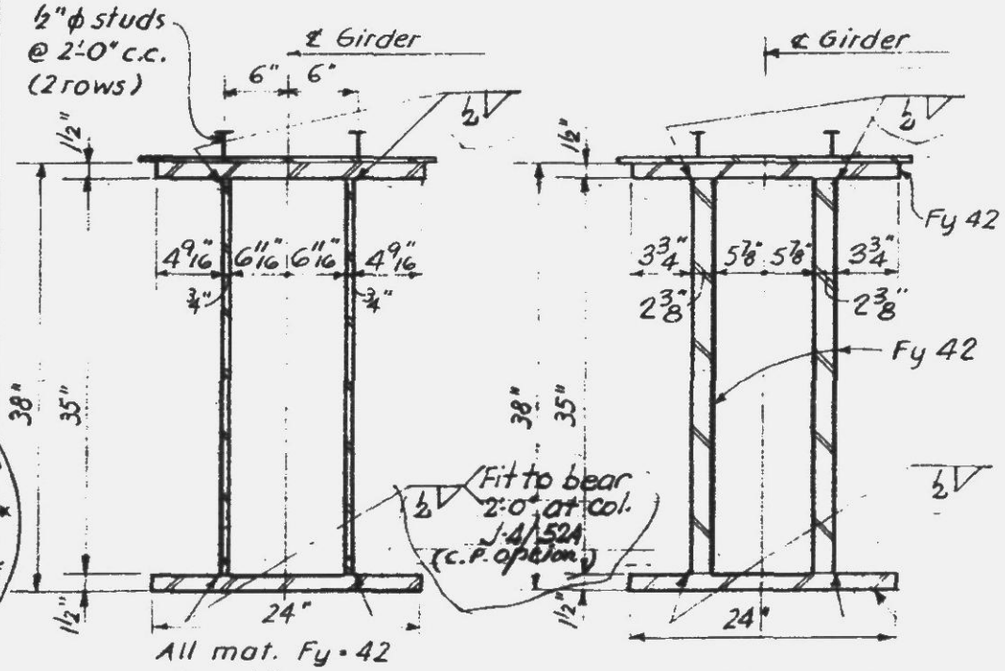

Section a-a

Section b-b

Section c-c

Note:
1. All welds to be E70xx.
2. All bolts to be A-325 friction type.
3. Col. cap Pl detail similar to Det. 104 (10-JK2-7)

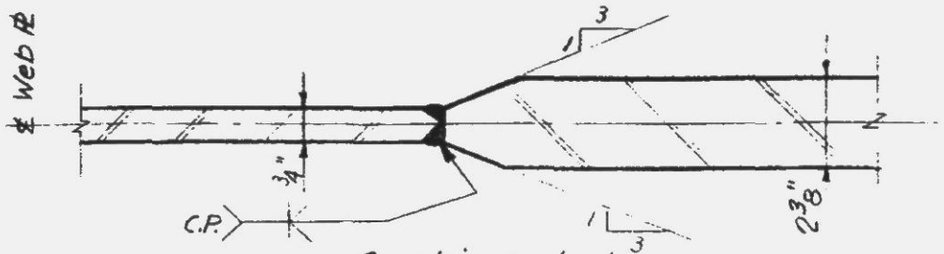

Section d-d

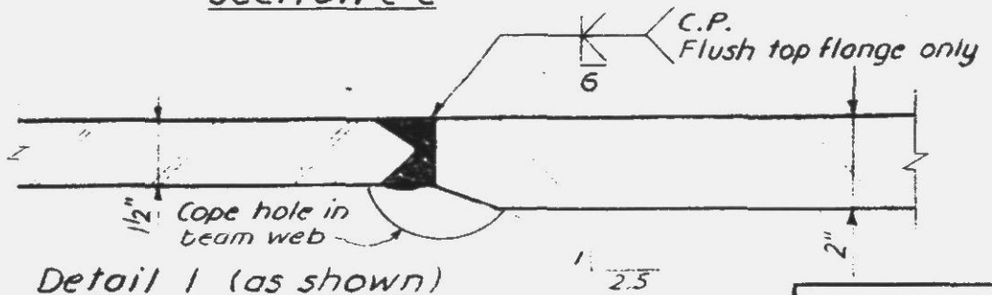

Detail 1 (as shown)
Detail 2 (reflected)

LICENSED PROFESSIONAL ENGINEER
LESLIE E. ROBERTSON
No. 34360
UNIVERSITY OF THE STATE OF NEW YORK

DRAWN S.T.M.
REVIEWED E.L.

12-JK2-58

SKILLING - HELLE - CHRISTIANSEN - ROBERTSON — Structural & Civil Engineers

PROJECT THE WORLD TRADE CENTER | TITLE DETAIL OF PLATE GIRDER | DATE 2-29-68

REVISIONS

6-28-68

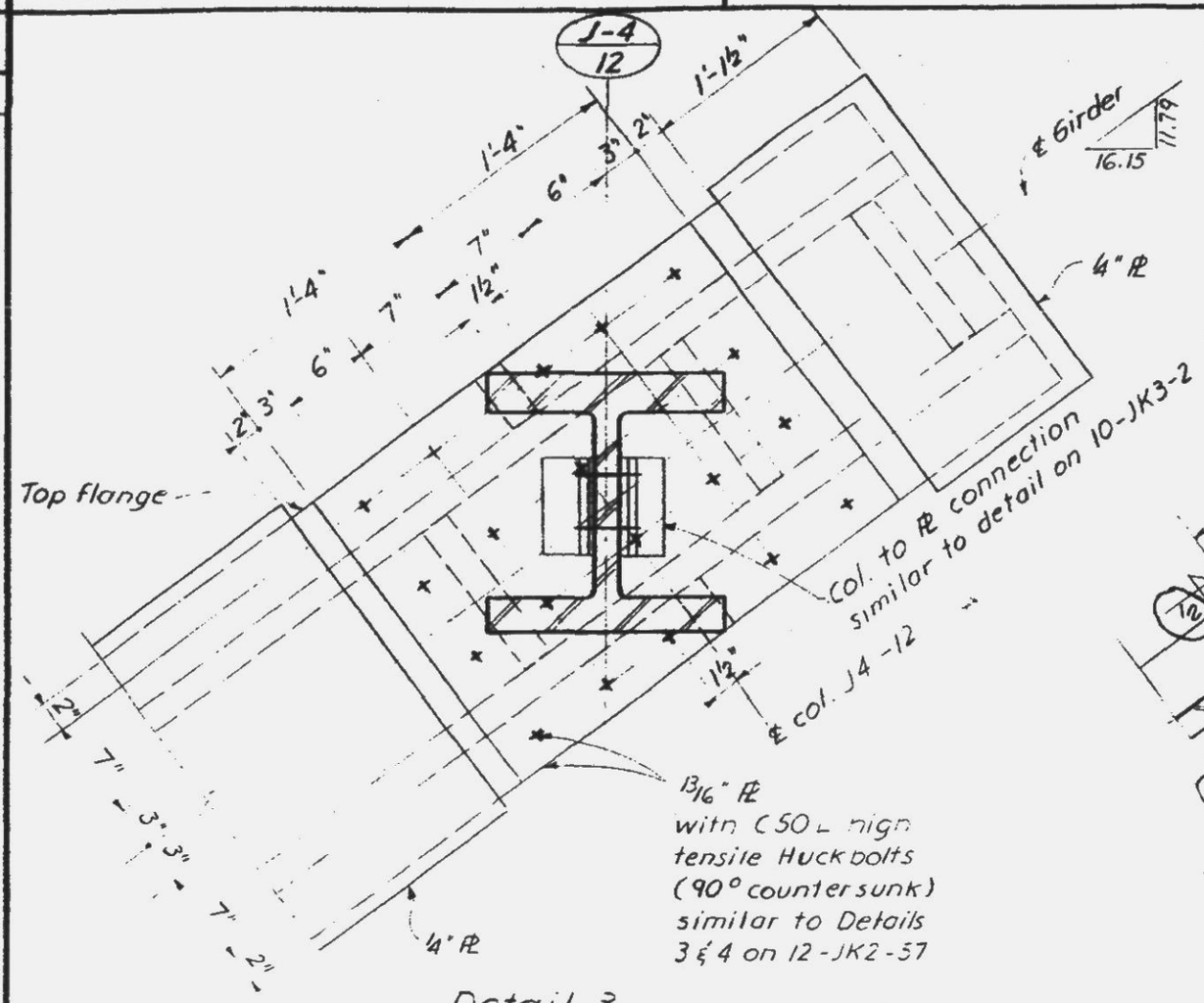

Detail 3

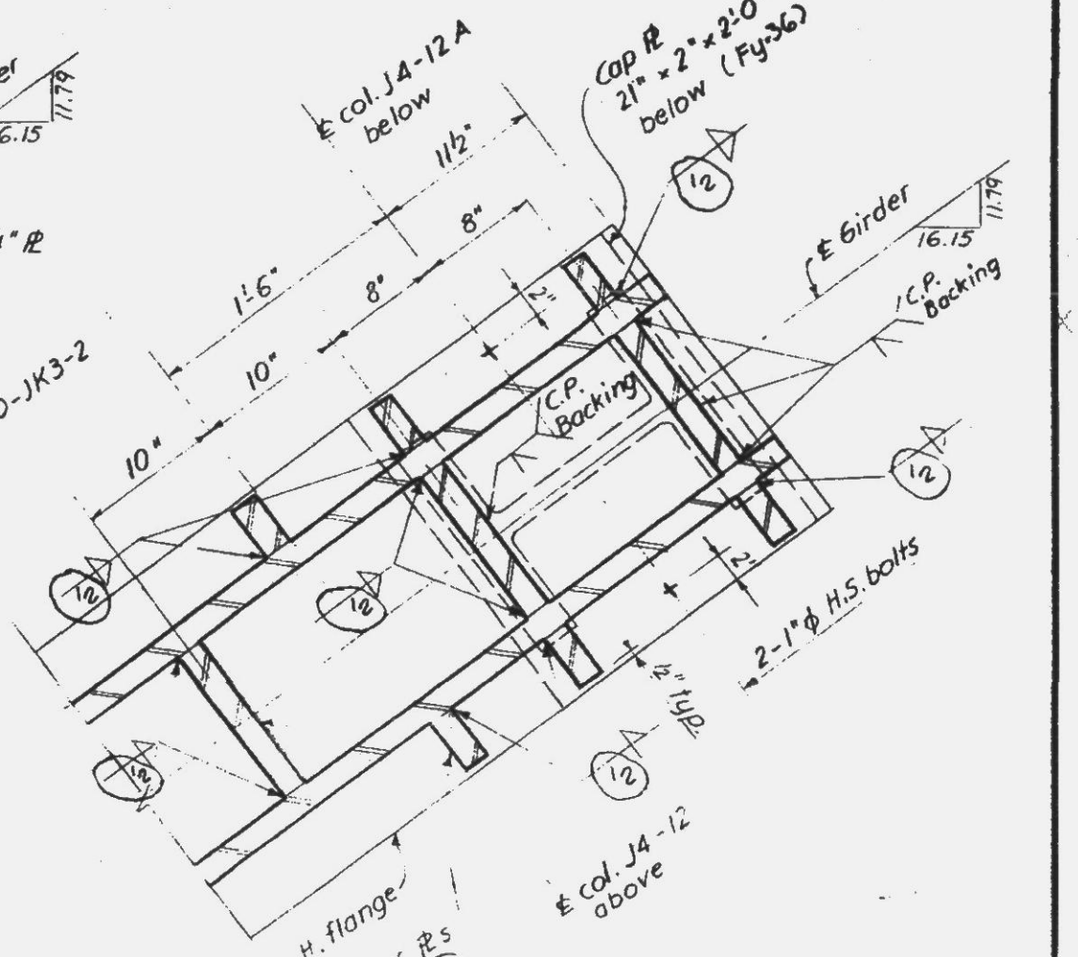

Detail 4

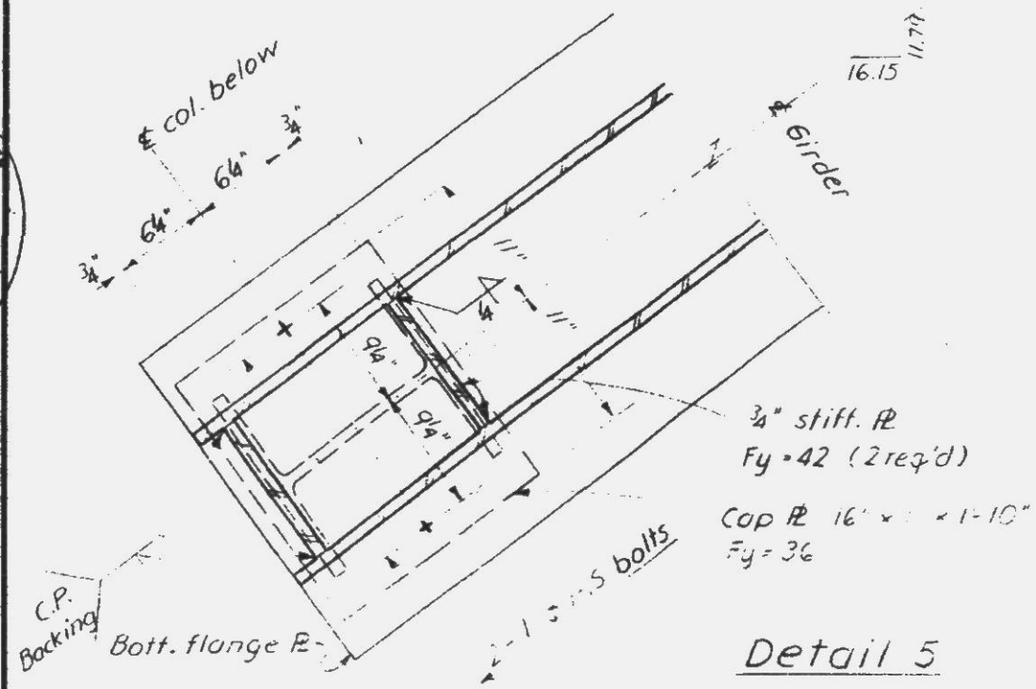

Detail 5

LICENSED PROFESSIONAL ENGINEER
LESLIE E. ROBERTSON
No. 34360
UNIVERSITY OF THE STATE OF NEW YORK

12-JK2-59

SKILLING - HELLE - CHRISTIANSEN - ROBERTSON — Structural & Civil Engineers

PROJECT: THE WORLD TRADE CENTER | TITLE: DETAIL OF PLATE GIRDER | DATE: 2-29-68

REVISIONS
6-28-68
1-3-69

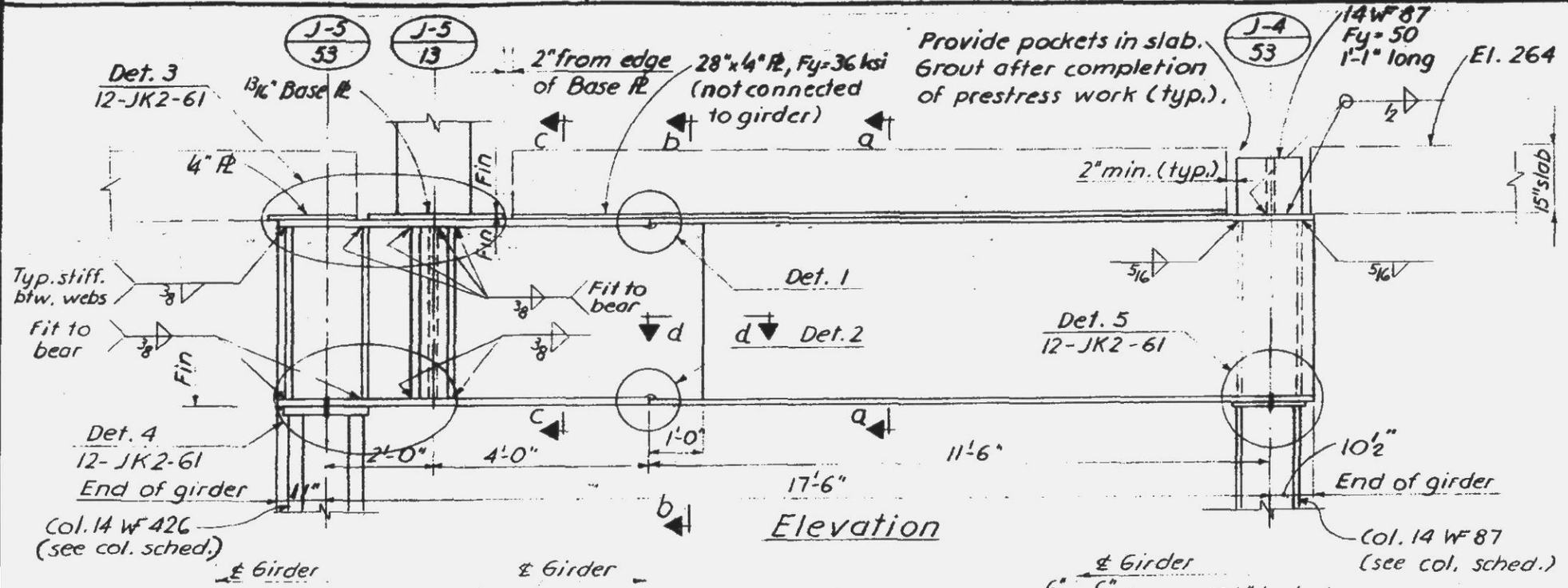

Note:
1. All welds to be E70XX
2. All bolts to be A-325 friction type.
3. Col. cap Pl. detail similar to Detail 104 (10-JK2-7)

LICENSED PROFESSIONAL ENGINEER
LESLIE E. ROBERTSON
No. 34360
UNIVERSITY OF THE STATE OF NEW YORK

DRAWN
S.T.M.
REVIEWED
E.L.

12-JK2-60

SKILLING - HELLE - CHRISTIANSEN - ROBERTSON — Structural & Civil Engineers

PROJECT THE WORLD TRADE CENTER | TITLE DETAIL OF PLATE GIRDER | DATE 2-29-68

REVISIONS

6-28-68

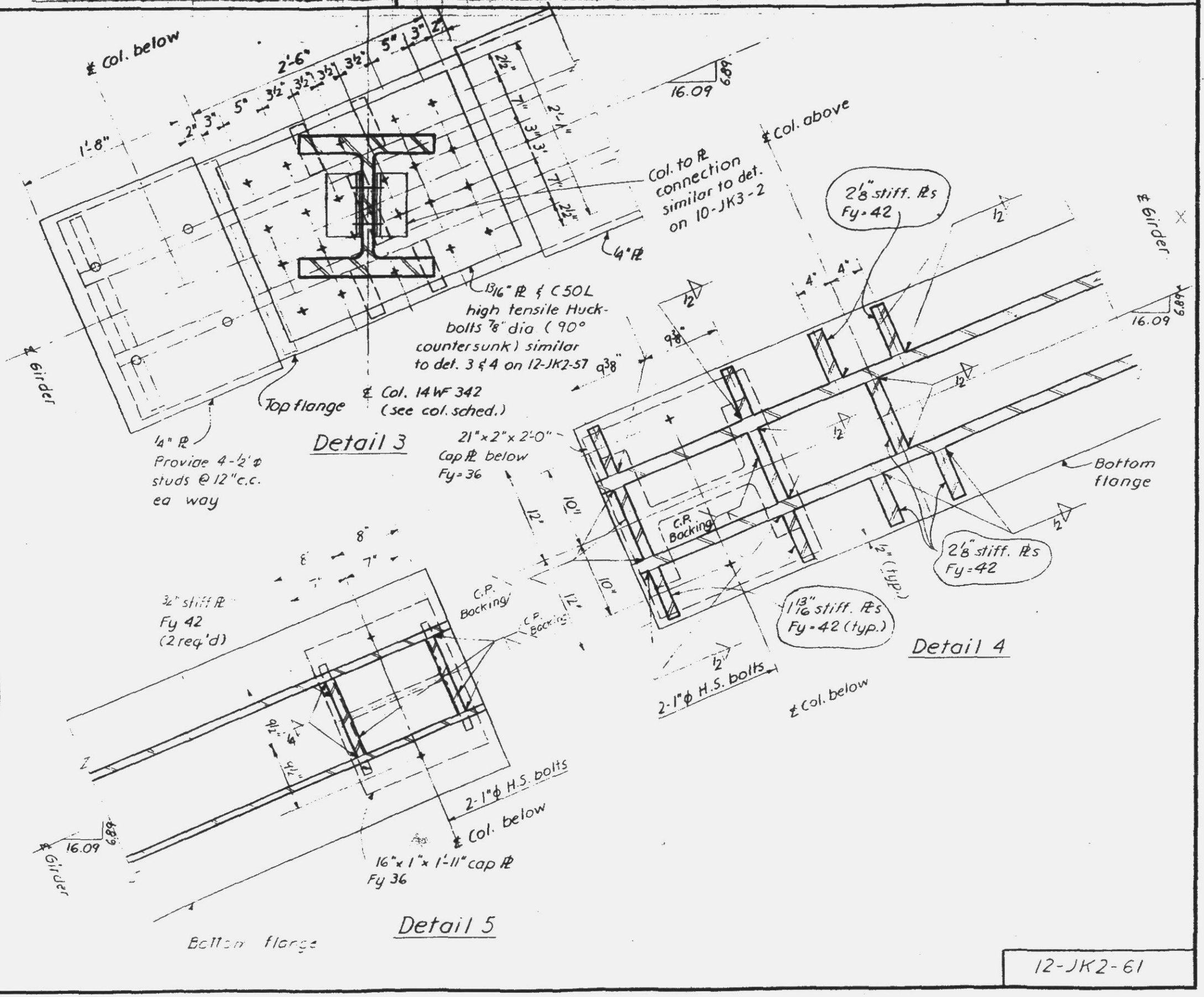

LICENSED PROFESSIONAL ENGINEER
LESLIE E. ROBERTSON
No. 34360
LICENSED TO PRACTICE IN THE STATE OF NEW YORK

12-JK2-61

SKILLING - HELLE - CHRISTIANSEN - ROBERTSON — Structural & Civil Engineers

PROJECT: THE WORLD TRADE CENTER — DETAIL OF PLATE GIRDER

DATE: 5-1-68

REVISIONS
6-7-68
7-19-68
1-3-69

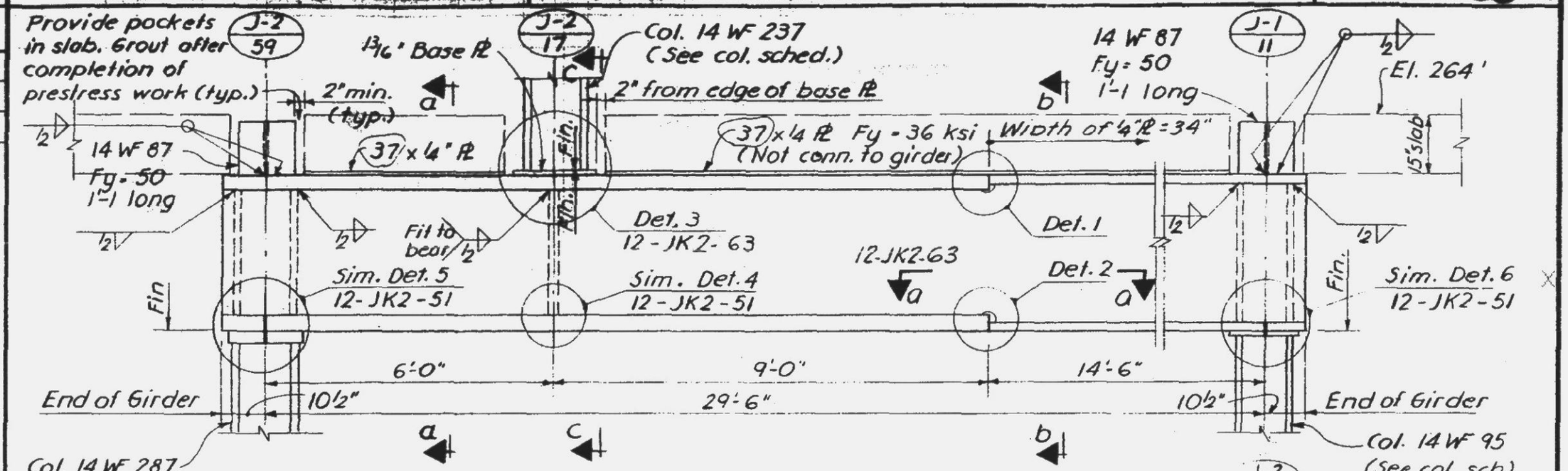

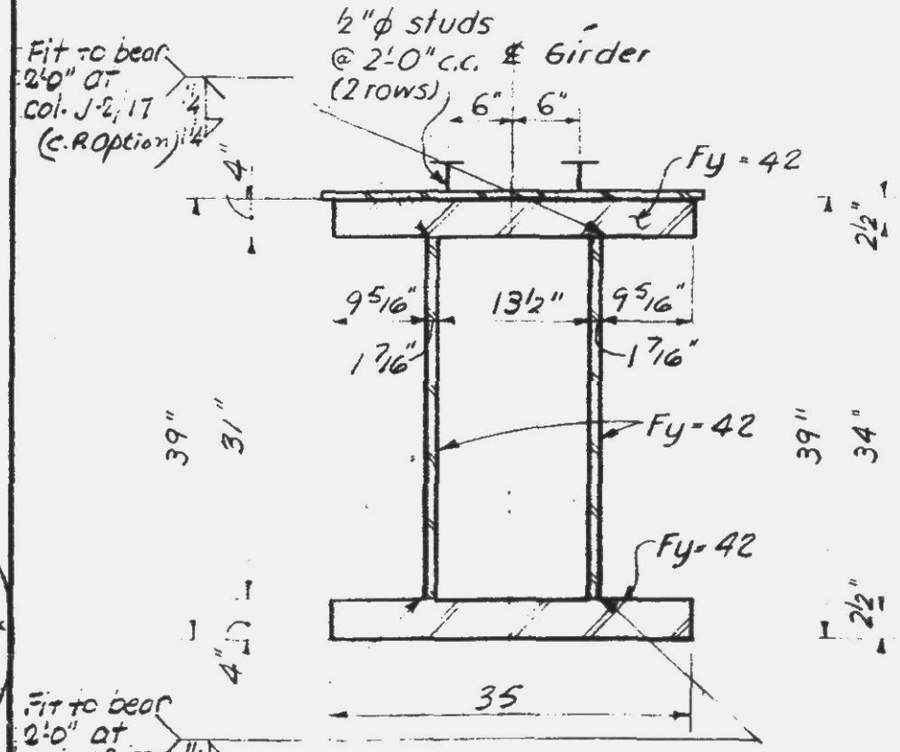

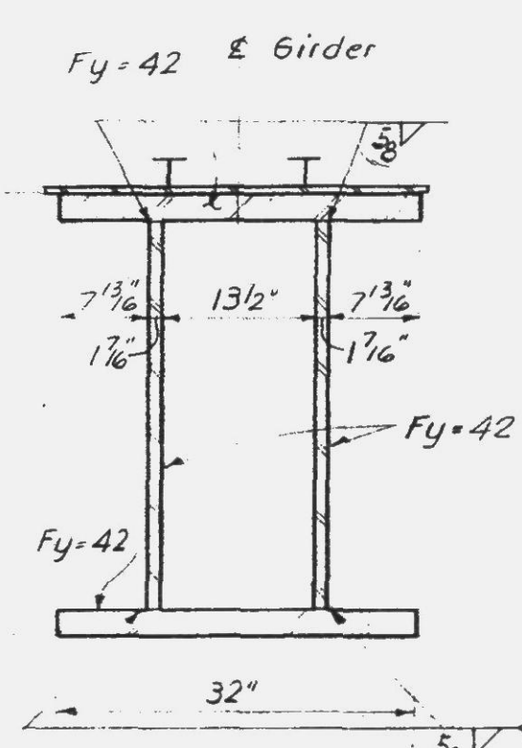

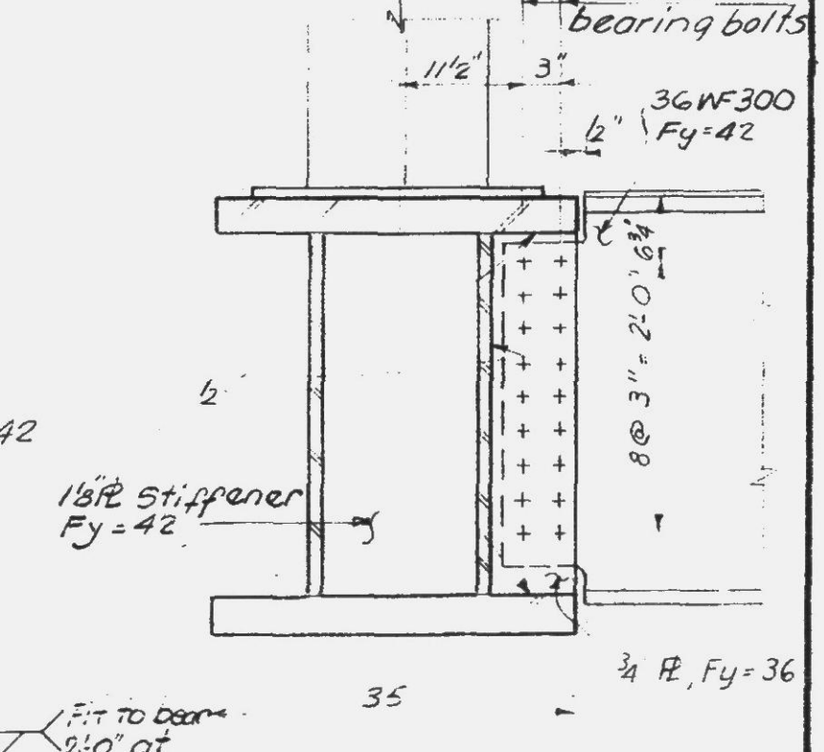

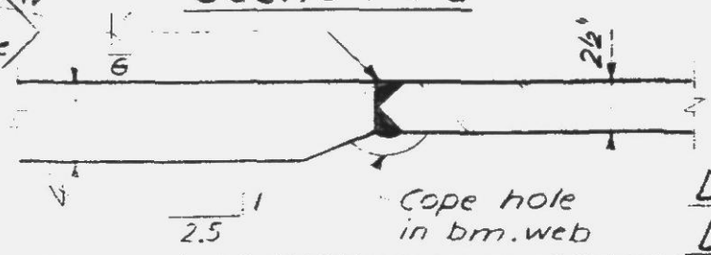

Detail 1 (as shown)
Detail 2 (reflected)

Note:
1. All welds to be E 70xx
2. All bolts to be A325 friction type, unless noted.
3. Col. cap Pl Detail similar to Detail 104 (10-JK2-7)

LICENSED PROFESSIONAL ENGINEER LESLIE E. ROBERTSON STATE OF NEW YORK

DRAWN S.T.M.
REVIEWED E.L.

12-JK2-62

SKILLING - HELLE - CHRISTIANSEN - ROBERTSON Structural & Civil Engineers

PROJECT THE WORLD TRADE CENTER | TITLE DETAIL OF PLATE GIRDER | DATE 5-1-68

REVISIONS
7-19-68

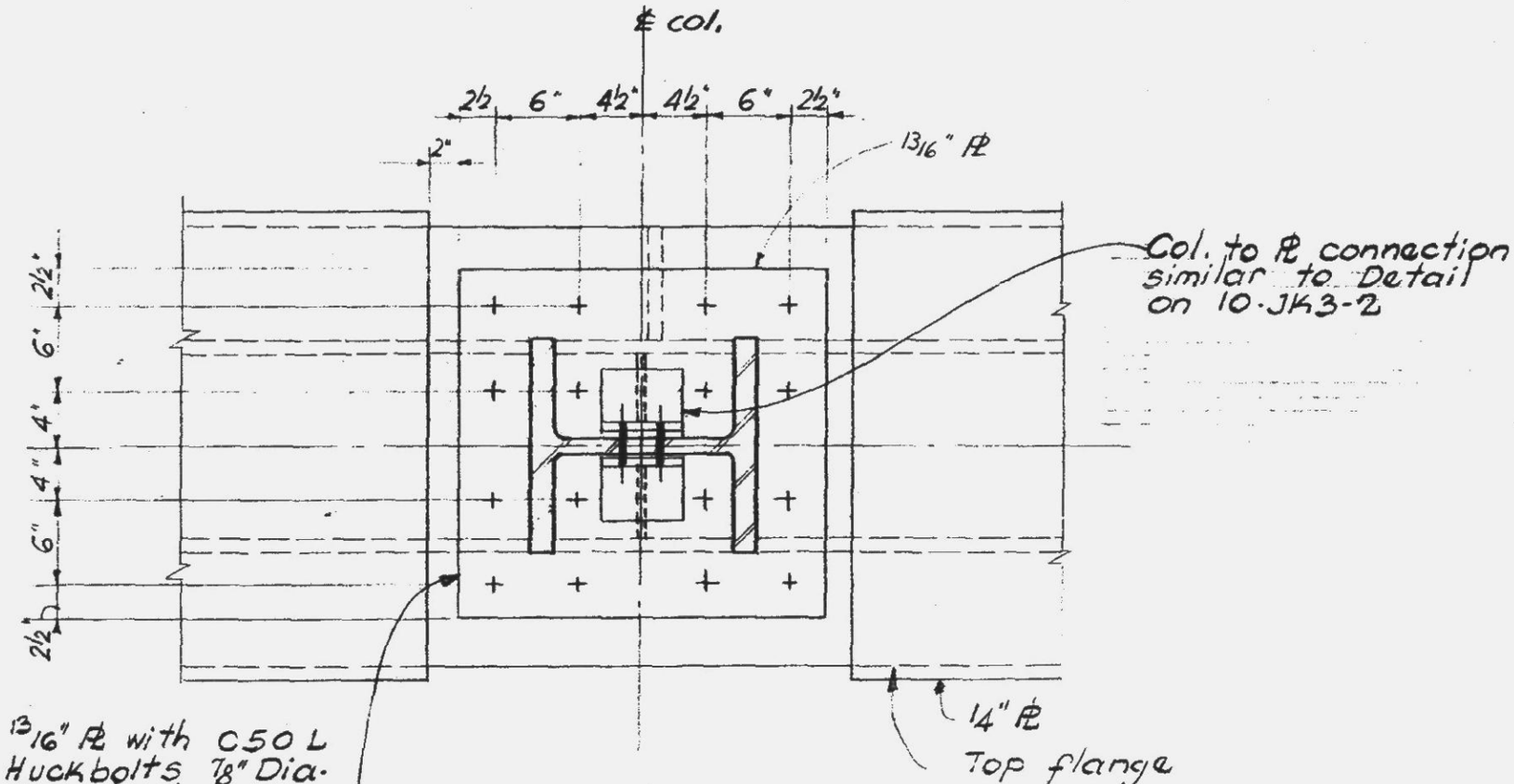

Detail 3

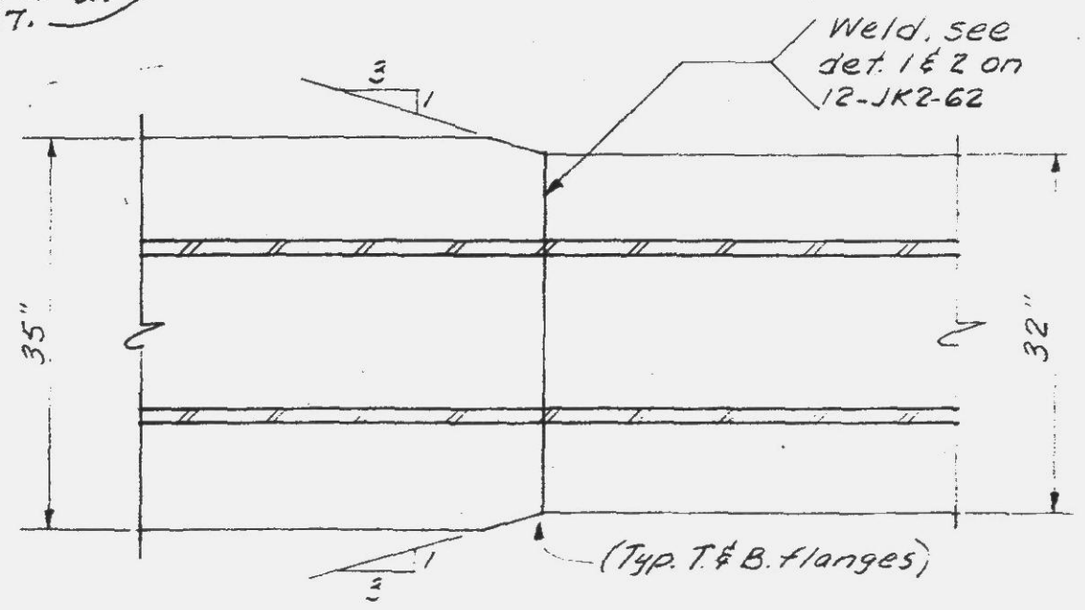

Section a-a

LICENSED PROFESSIONAL ENGINEER
LESLIE E. ROBERTSON
No. 34360
UNIVERSITY OF THE STATE OF NEW YORK

12-JK2-63

SKILLING - HELLE - CHRISTIANSEN - ROBERTSON — Structural & Civil Engineers

PROJECT THE WORLD TRADE CENTER | TITLE DETAILS OF PLATE GIRDER | DATE 5-1-68

EVISIONS
6-7-68
7-19-68
1-3-69

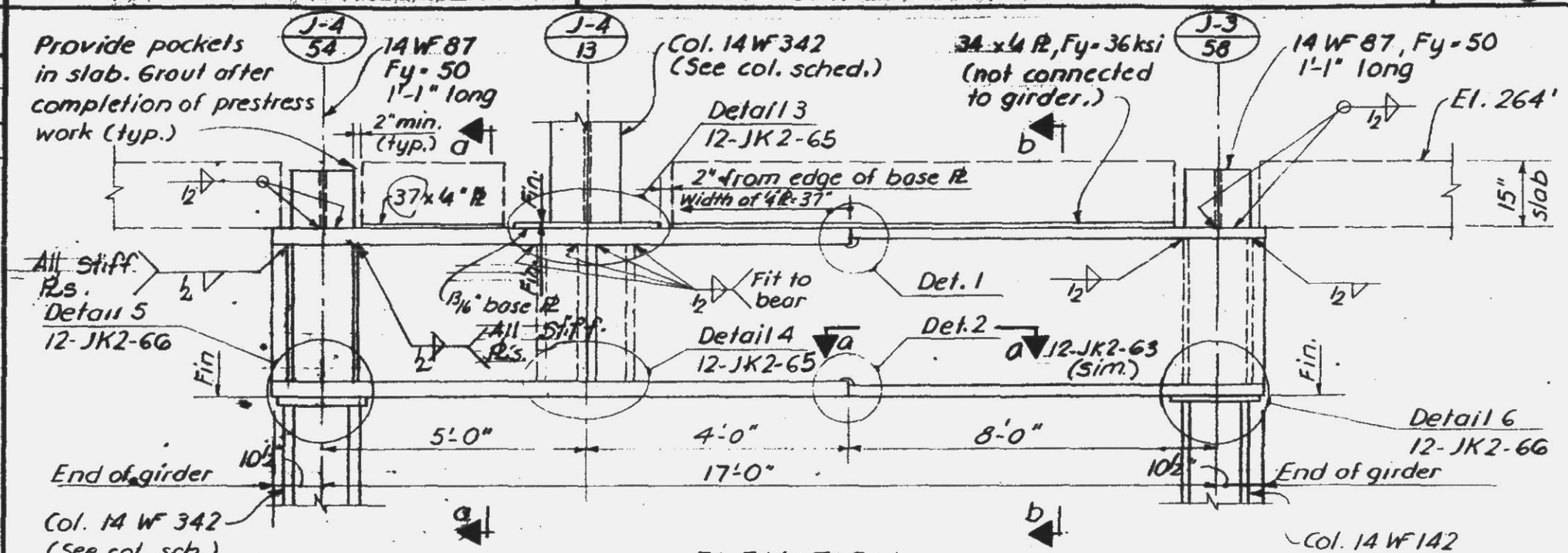

Note:
1. All welds to be E 70 xx
2. All bolts to be A-325 friction type.
3. Col. cap PL Detail similar to Detail 104 (10-JK2-7)

LICENSED PROFESSIONAL ENGINEER — LESLIE E. ROBERTSON — No. 34360 — UNIVERSITY OF THE STATE OF NEW YORK

DRAWN S.T.M.
REVIEWED E.L.

12-JK2-64

SKILLING - HELLE - CHRISTIANSEN - ROBERTSON Structural & Civil Engineers

PROJECT THE WORLD TRADE CENTER | TITLE DETAIL OF PLATE GIRDER | DATE 5-1-68

REVISIONS

7-19-68

10-15-68

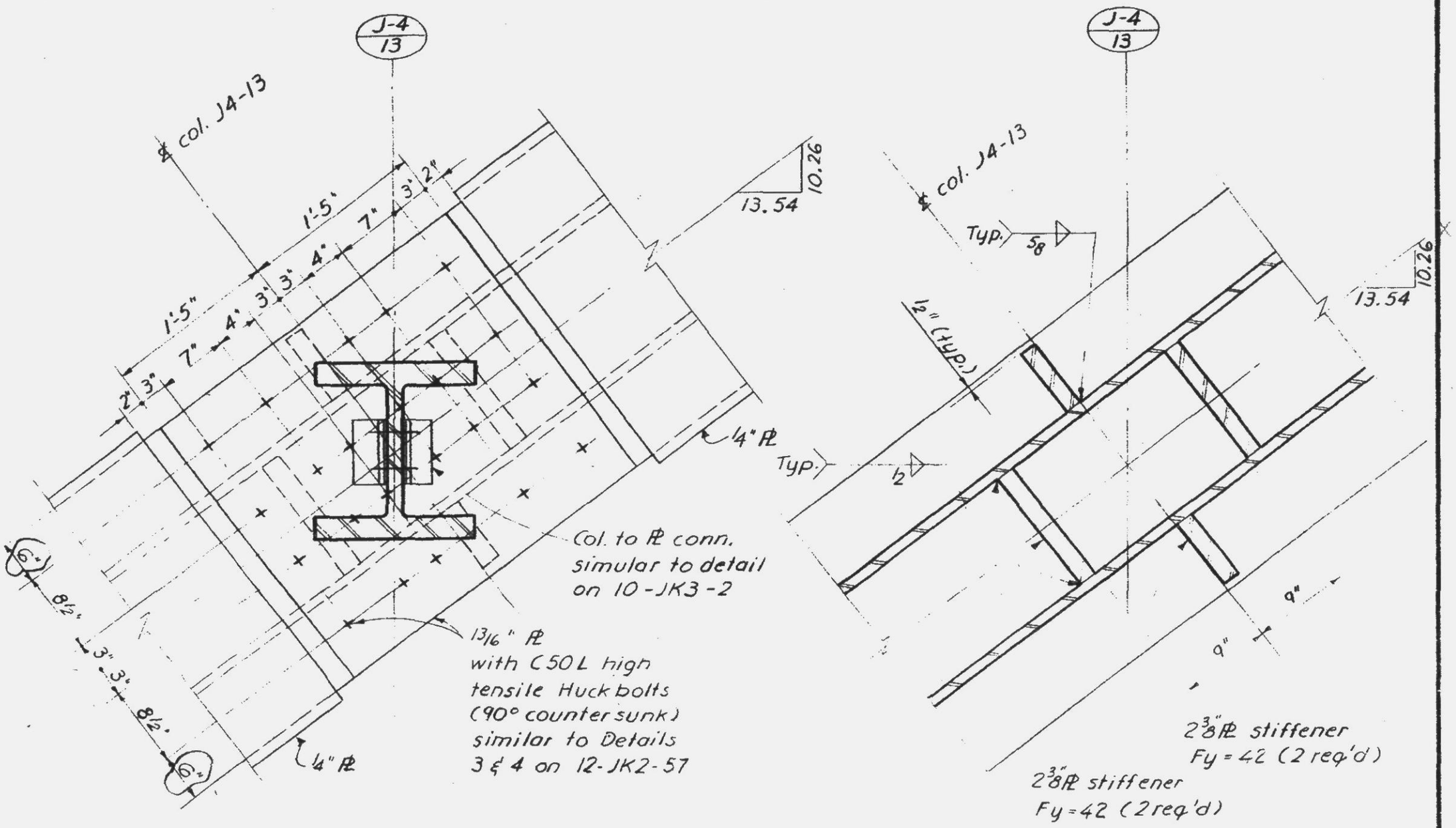

Detail 3

Detail 4

LICENSED PROFESSIONAL ENGINEER LESLIE E. ROBERTSON

12-JK2-65

SKILLING - HELLE - CHRISTIANSEN - ROBERTSON Structural & Civil Engineers

PROJECT THE WORLD TRADE CENTER TITLE DETAIL OF PLATE GIRDER DATE 5-1-68

REVISIONS

7-19-68

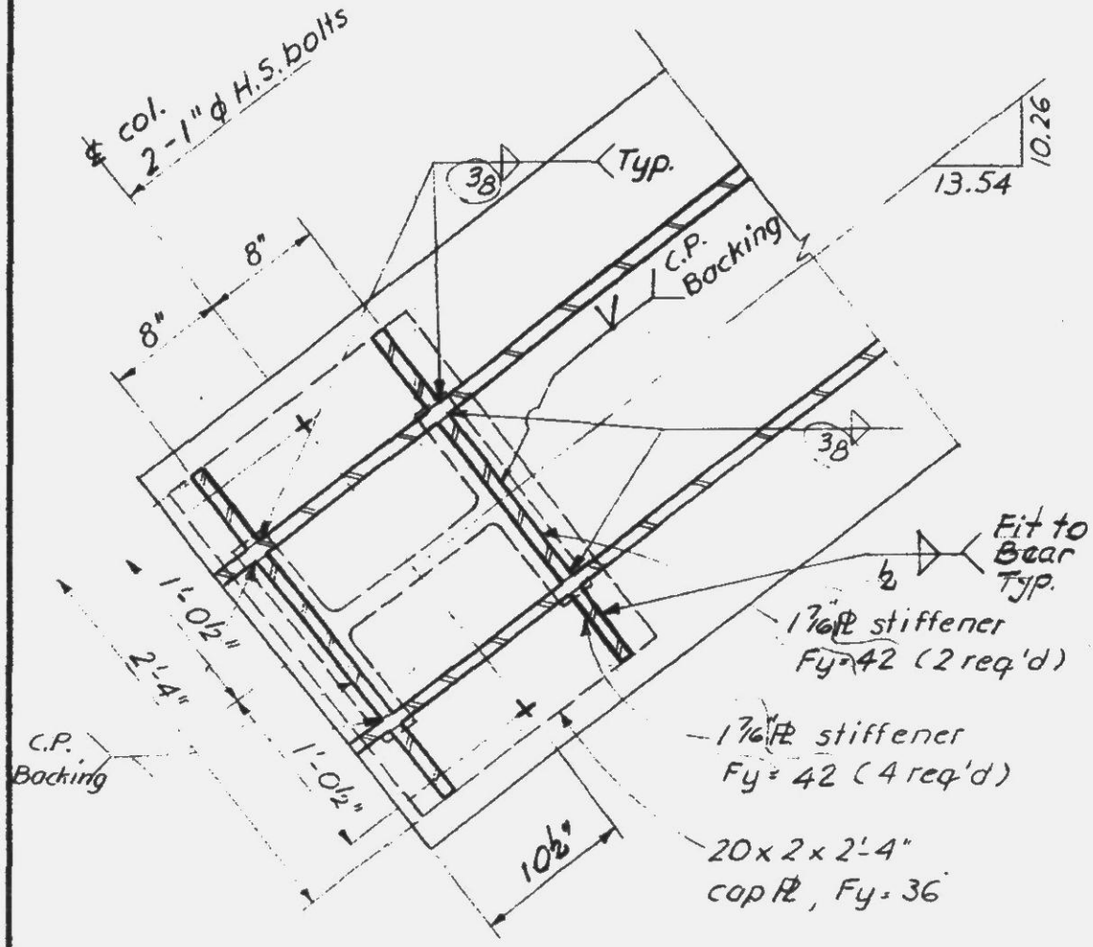

Detail 5

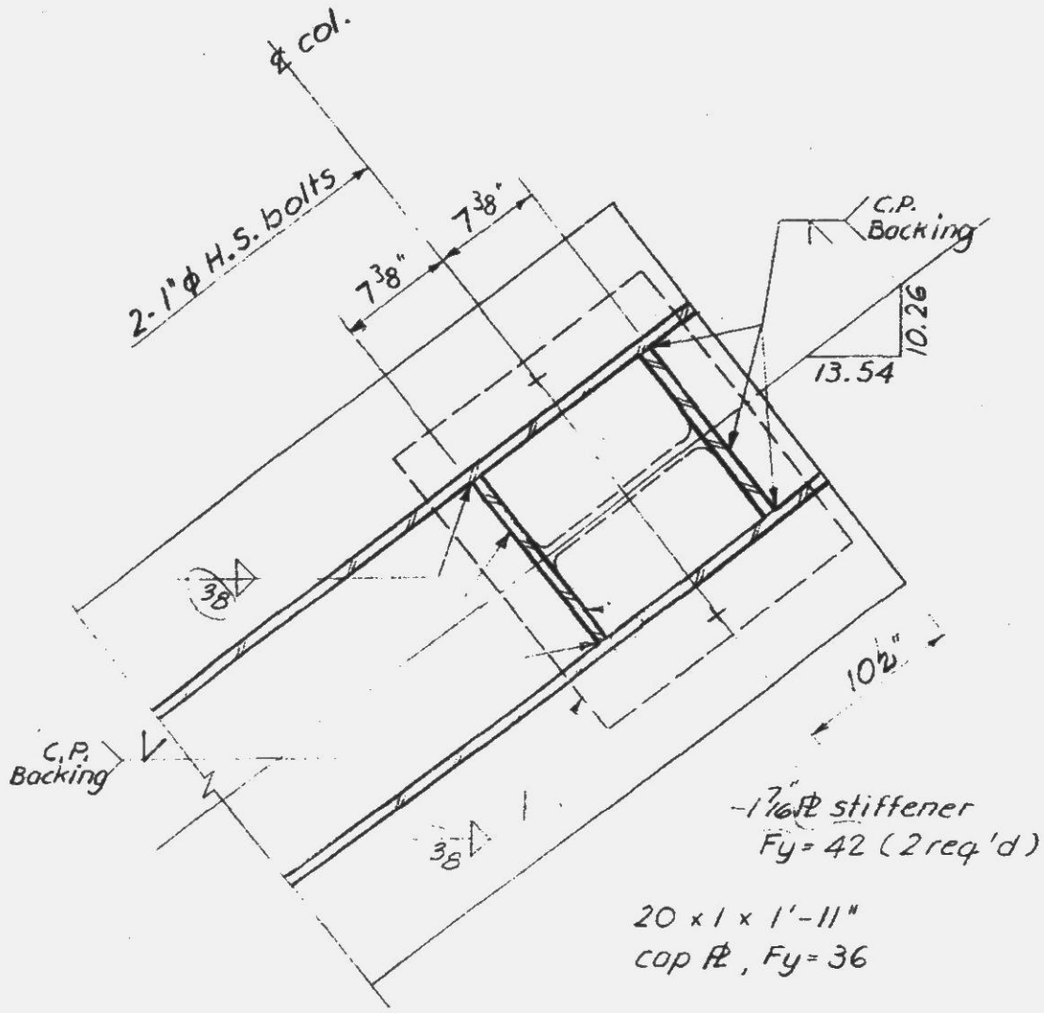

Detail 6

LICENSED PROFESSIONAL ENGINEER
LESLIE E. ROBERTSON
No. 54360
UNIVERSITY OF THE STATE OF NEW YORK

12-JK2-66

SKILLING - HELLE - CHRISTIANSEN - ROBERTSON Structural & Civil Engineers

PROJECT THE WORLD TRADE CENTER | TITLE DETAIL OF PLATE GIRDER | DATE 5-1-68

REVISIONS
7-19-68
1-3-69

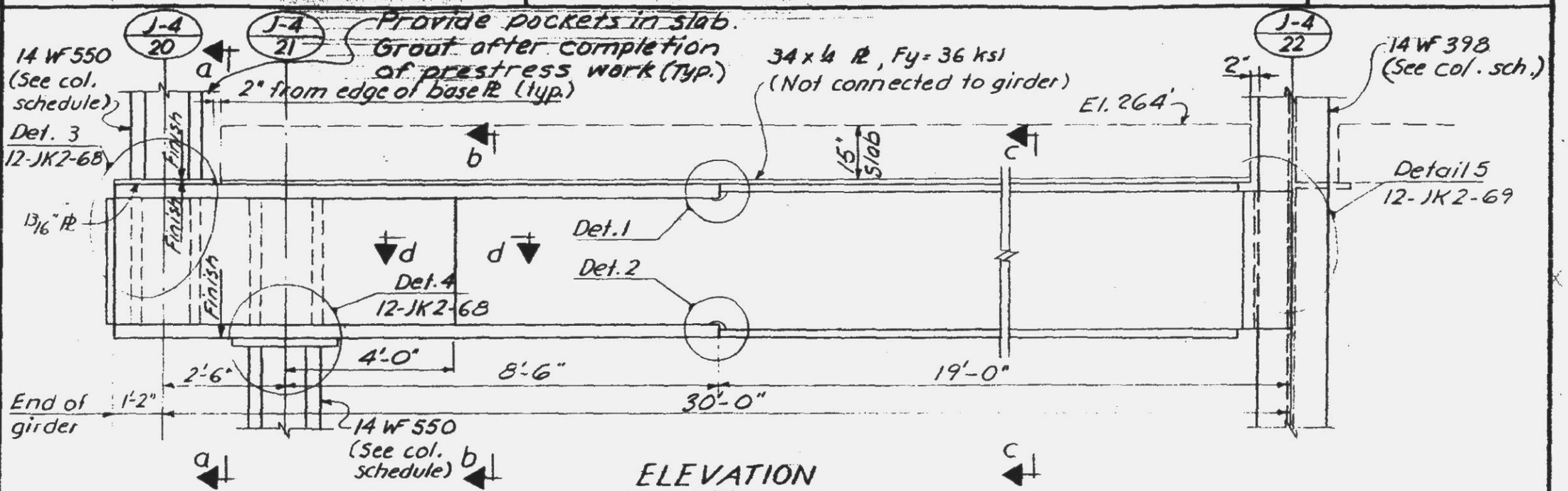

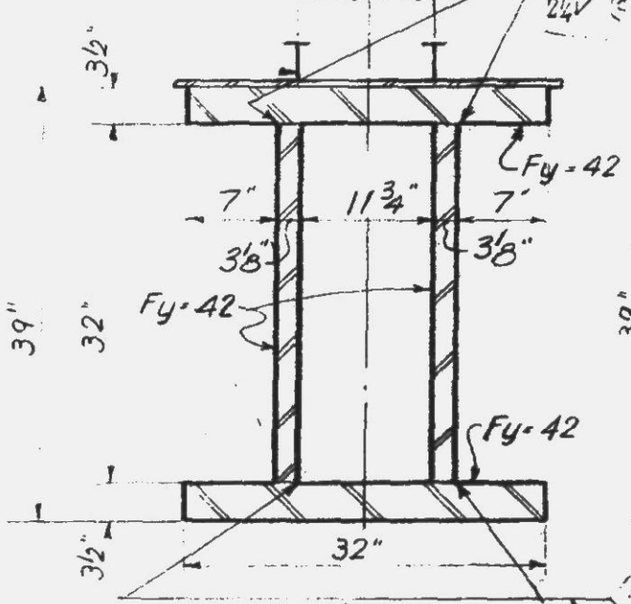

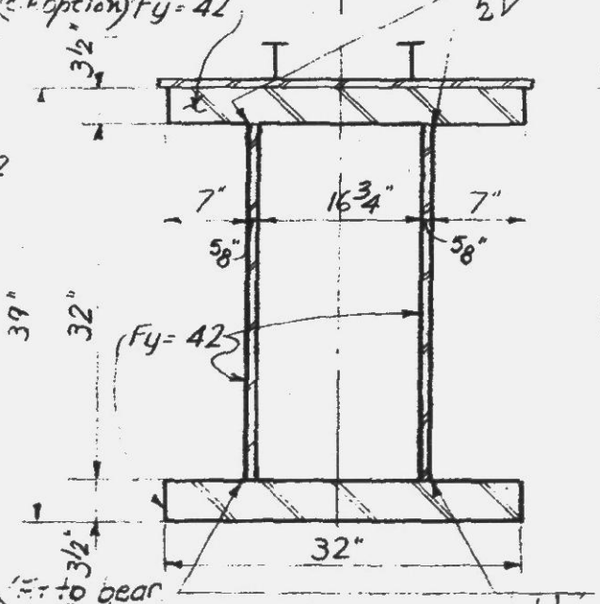

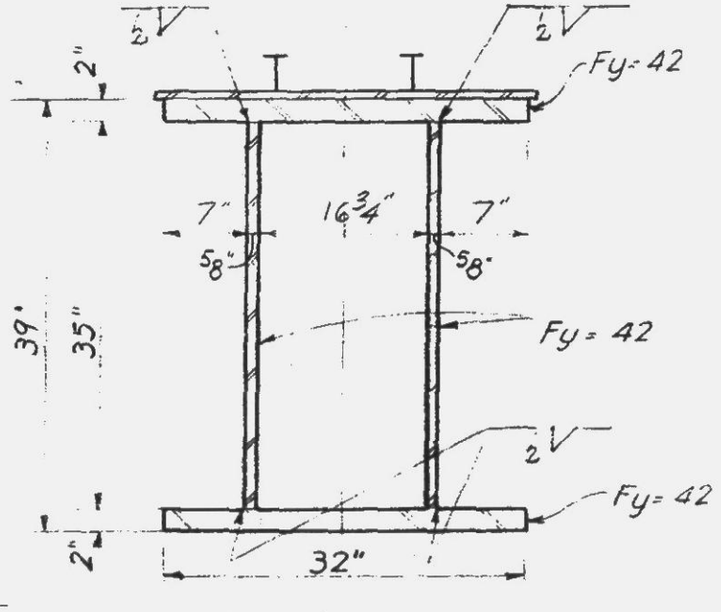

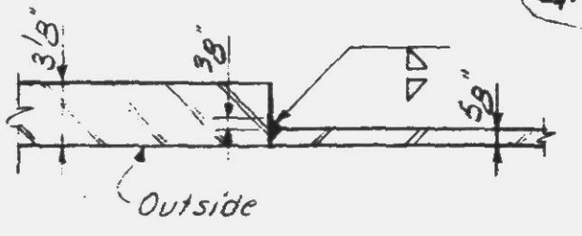

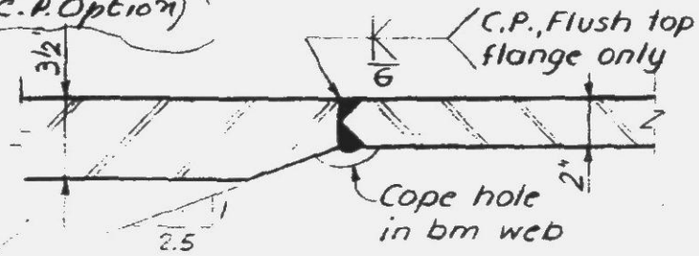

Note:
1. All welds to be E70xx.
2. All bolts to be A 325 friction type. Except as noted.
3. Col. cap Pl Detail similar to Detail 104 (10-JK2-7)

LICENSED PROFESSIONAL ENGINEER LESLIE E. ROBERTSON No. 34360 STATE OF NEW YORK

DRAWN S.T.M.
REVIEWED E.L.

12-JK2-67

SKILLING - HELLE - CHRISTIANSEN - ROBERTSON Structural & Civil Engineers

PROJECT THE WORLD TRADE CENTER TITLE DETAIL OF PLATE GIRDER DATE 5-1-68

REVISIONS
6-7-68
7-19-68

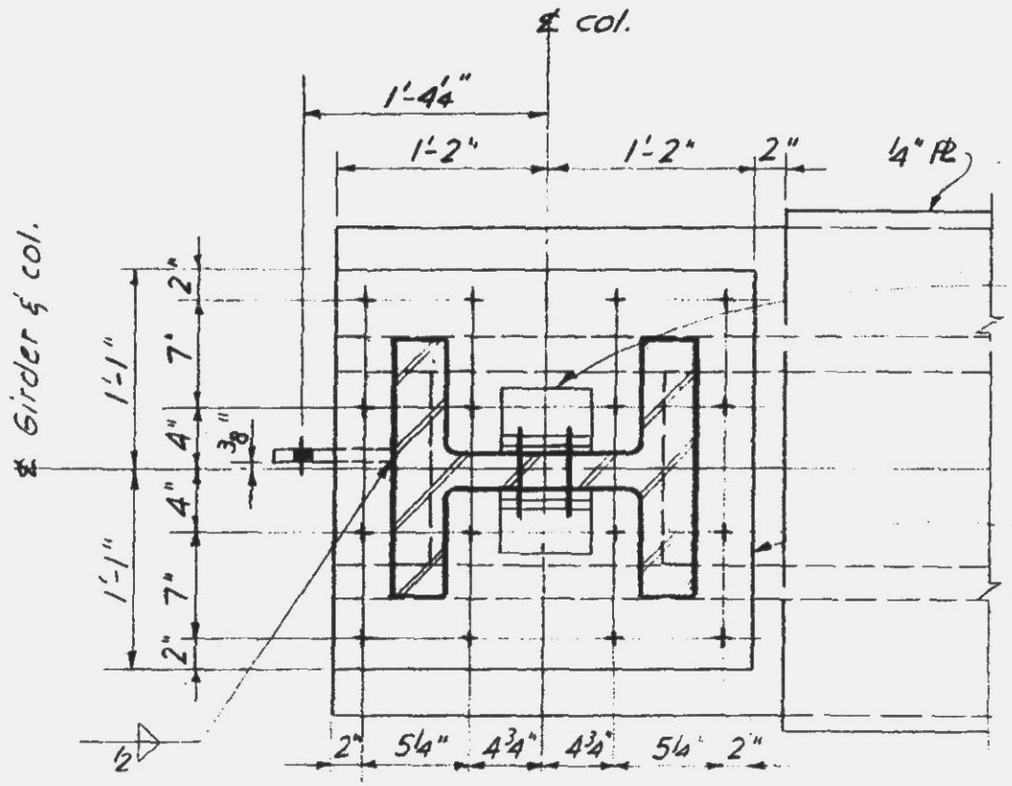

Detail 3
Plan

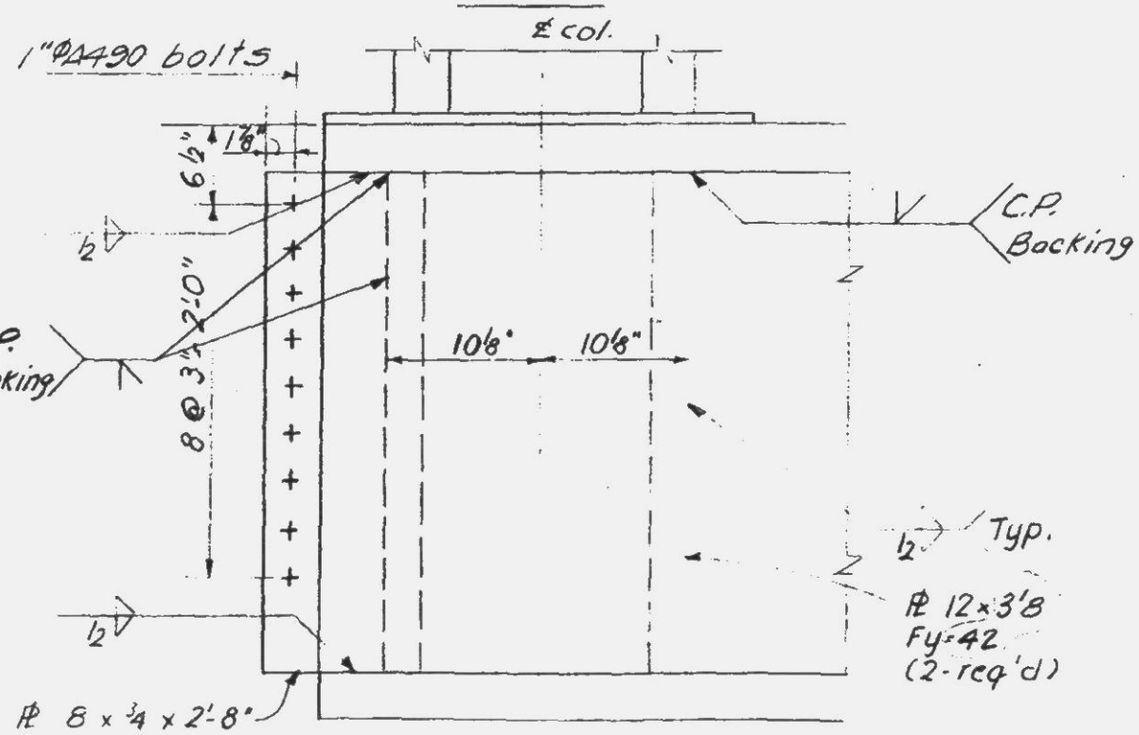

Detail 3
Elevation

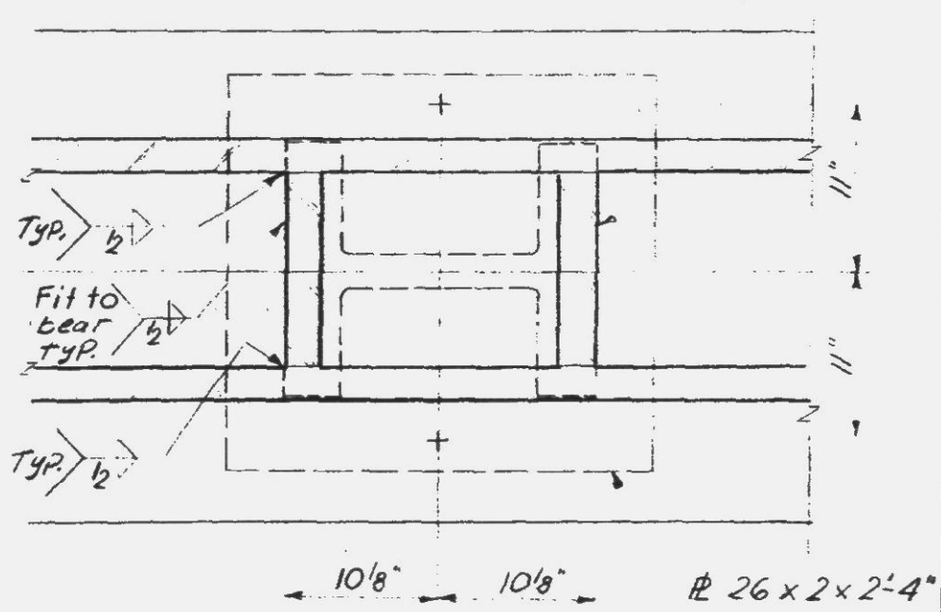

Detail 4

LICENSED PROFESSIONAL ENGINEER
LESLIE E. ROBERTSON
No. 84360
UNIVERSITY OF THE STATE OF NEW YORK

12-JK2-68

SKILLING - HELLE - CHRISTIANSEN - ROBERTSON Structural & Civil Engineers

PROJECT THE WORLD TRADE CENTER | TITLE DETAIL OF PLATE GIRDER | DATE 5-1-68

REVISIONS

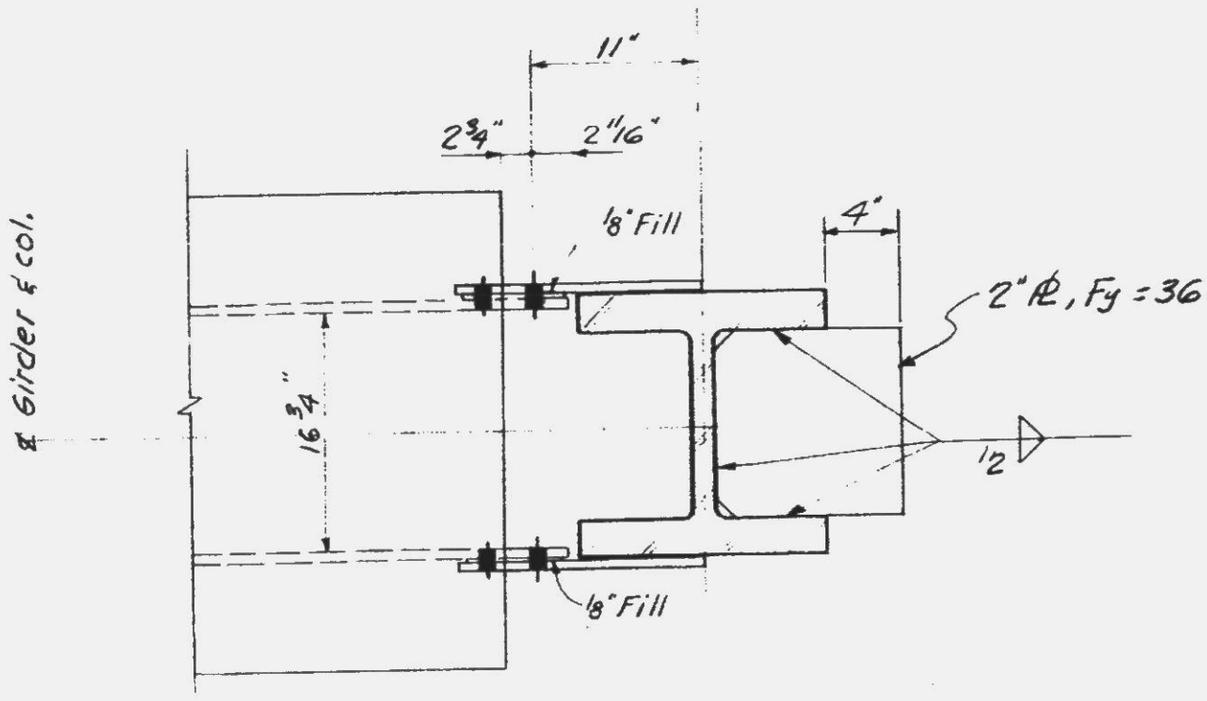

Section a-a

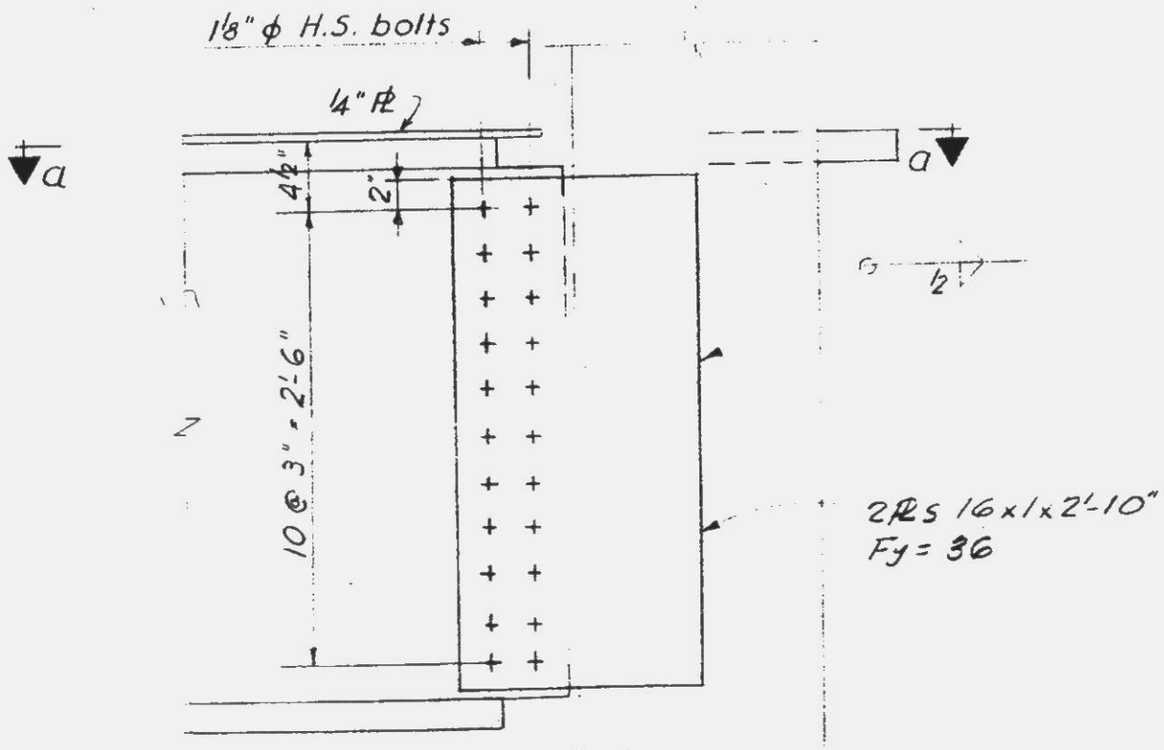

Detail 5

LICENSED PROFESSIONAL ENGINEER
LESLIE E. ROBERTSON
No. 34360
UNIVERSITY OF THE STATE OF NEW YORK

12-JK2-69

SKILLING - HELLE - CHRISTIANSEN - ROBERTSON — Structural & Civil Engineers

PROJECT THE WORLD TRADE CENTER | TITLE GIRDER DETAILS | DATE 5-1-68

REVISIONS
6-7-68
7-19-68

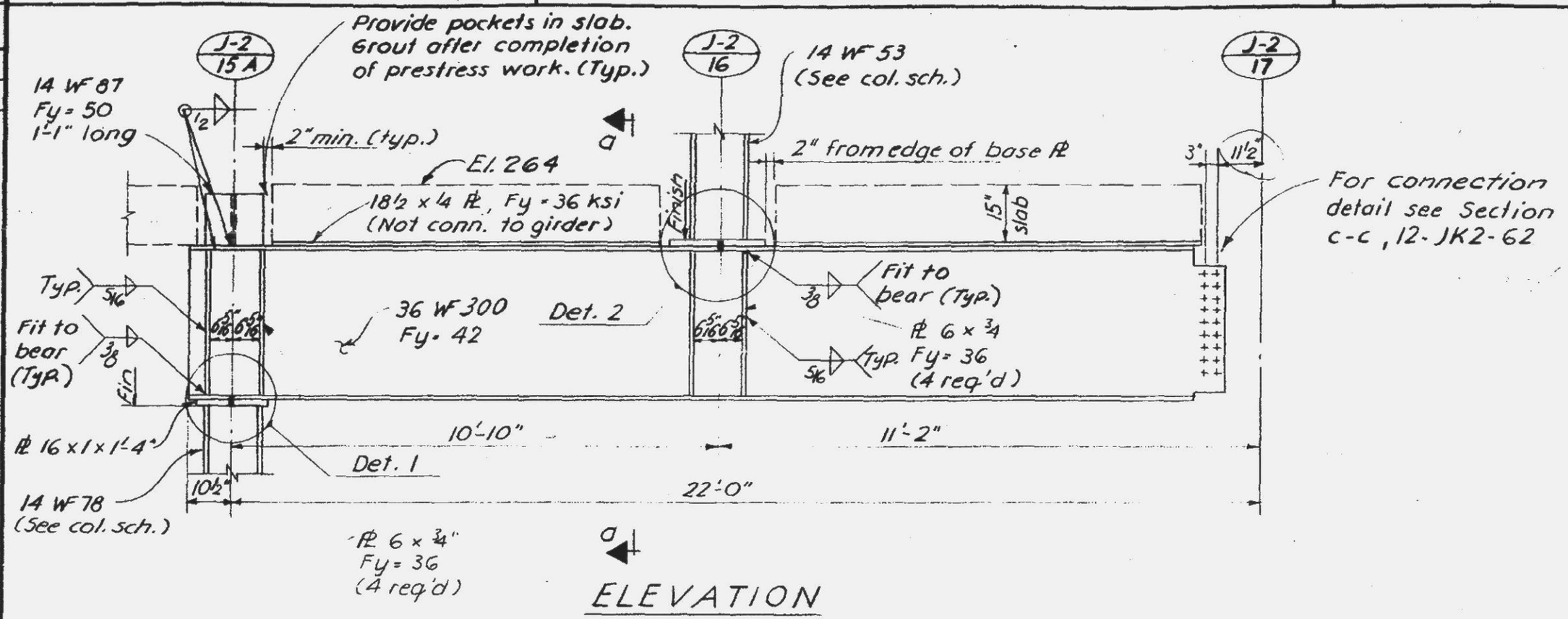

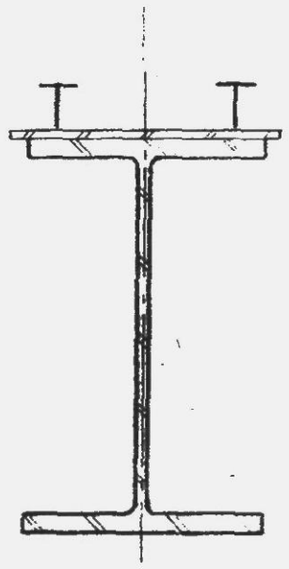

Section a-a

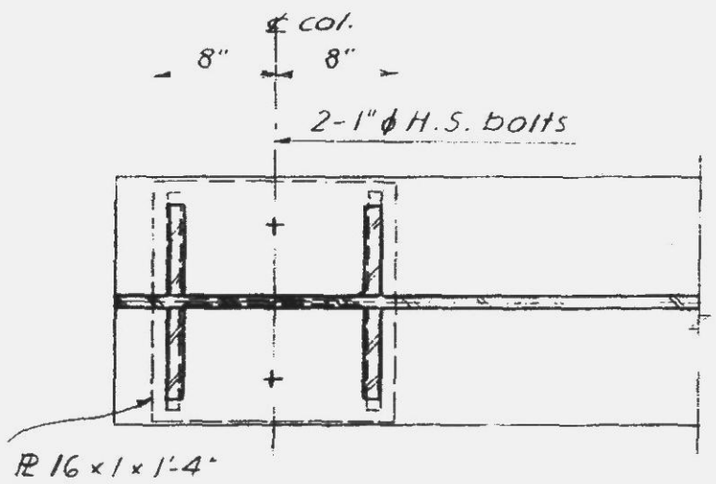

Detail 1

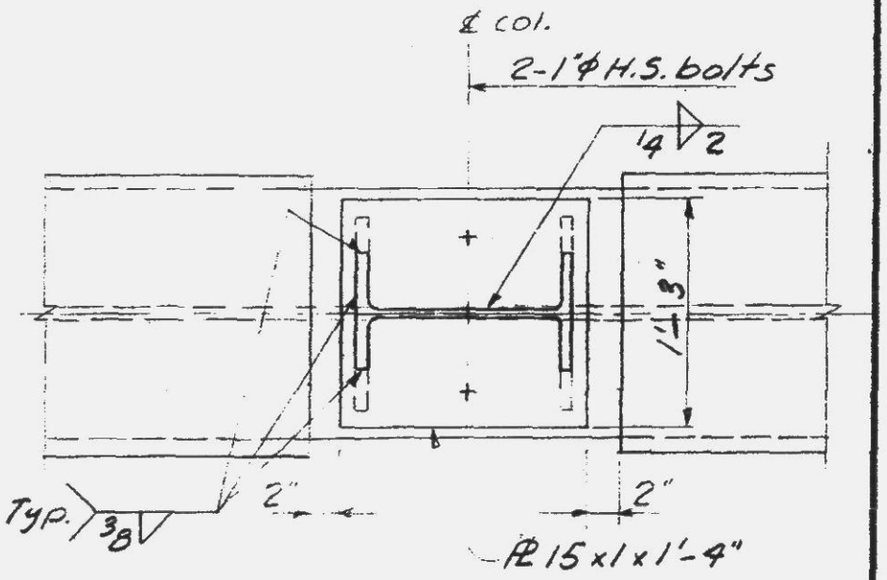

Detail 2

Note:
1. All welds to be E 70 xx
2. All bolts to be A325 friction type.
3. Col. cap PL Detail similar to Detail 104 (10-JK2-7)

LICENSED PROFESSIONAL ENGINEER
LESLIE E. ROBERTSON
No. 34360
UNIVERSITY OF THE STATE OF NEW YORK

12-JK2-70

SKILLING - HELLE - CHRISTIANSEN - ROBERTSON Structural & Civil Engineers

PROJECT THE WORLD TRADE CENTER | TITLE GIRDER DETAILS | DATE 5-1-68

REVISIONS
6-7-68

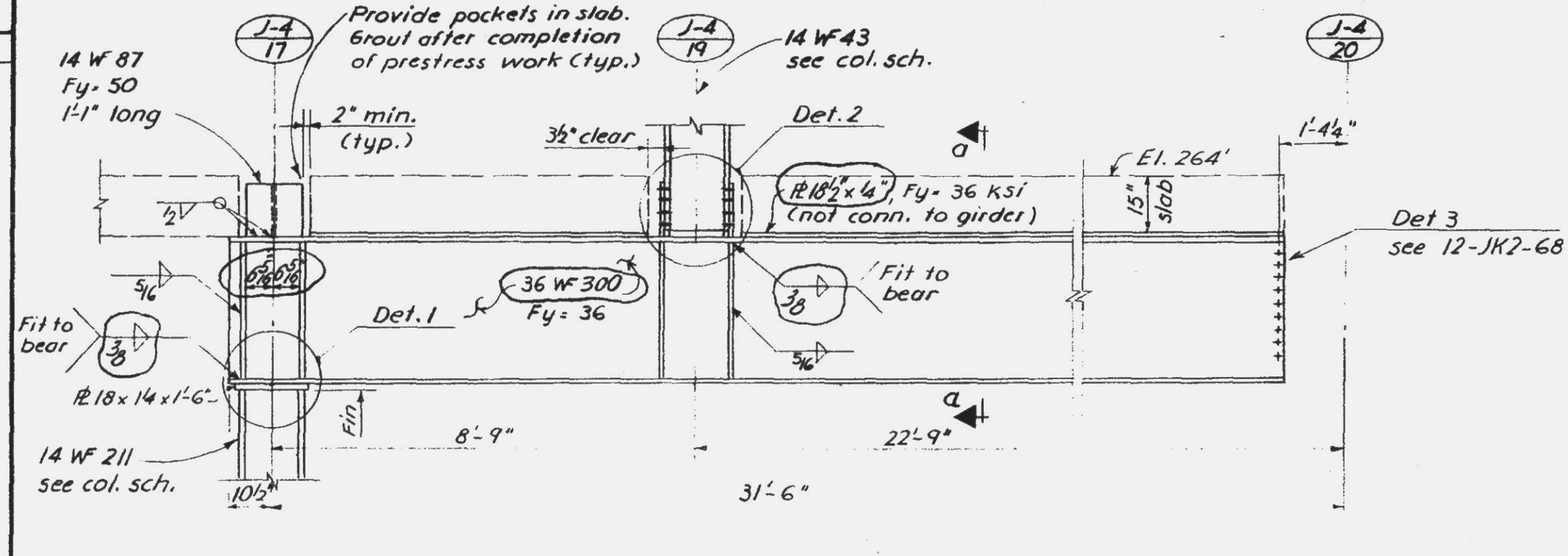

ELEVATION

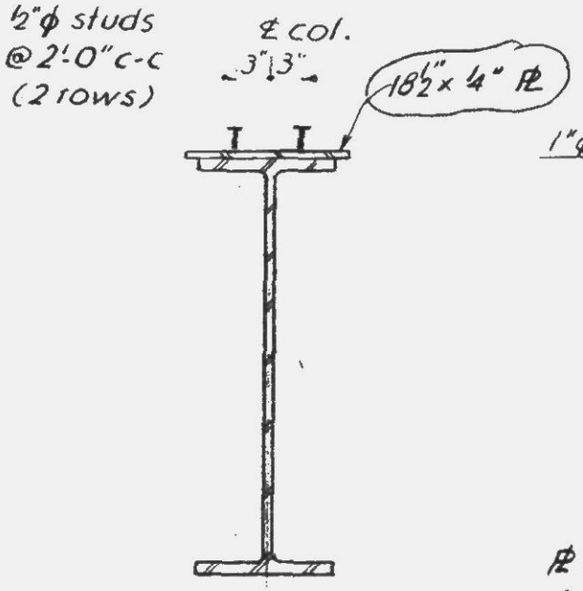

Section a-a

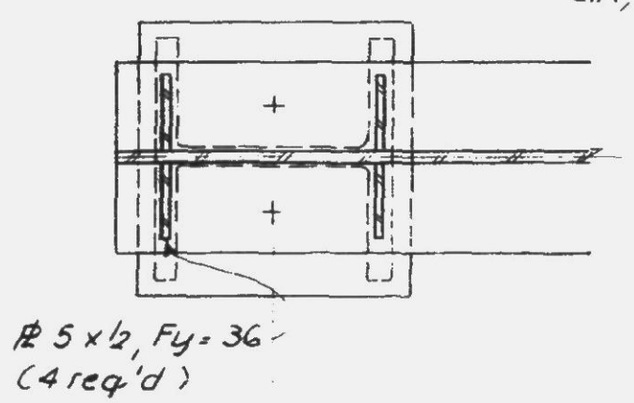

Detail 1

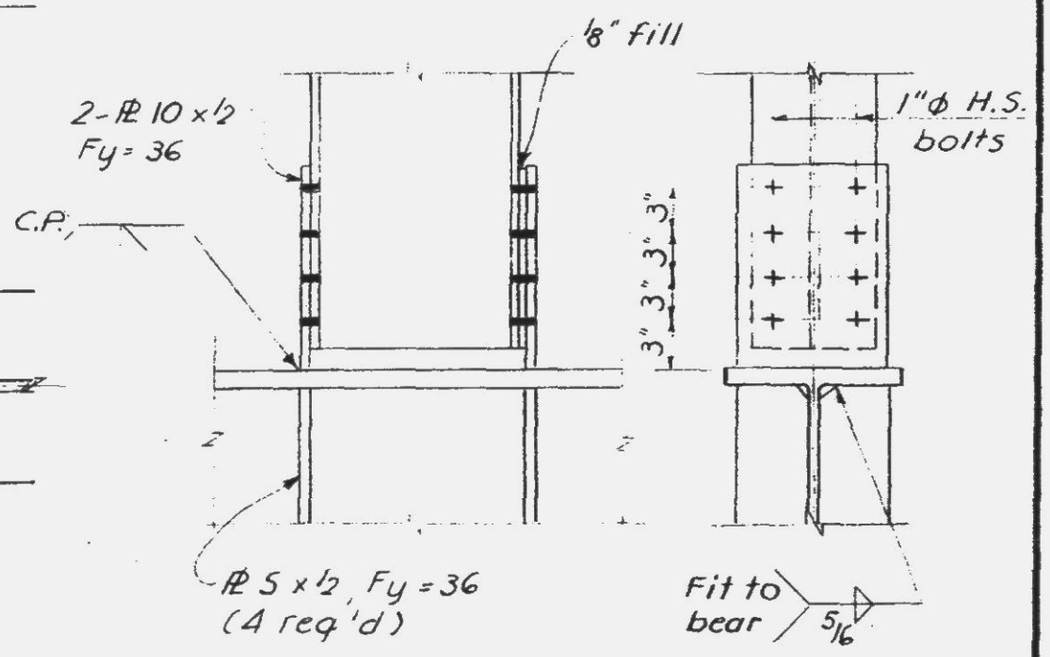

Detail 2

LICENSED PROFESSIONAL ENGINEER
LESLIE E. ROBERTSON
No. 54360
UNIVERSITY OF THE STATE OF NEW YORK

12-JK2-71

SKILLING - HELLE - CHRISTIANSEN - ROBERTSON — Structural & Civil Engineers

PROJECT THE WORLD TRADE CENTER | TITLE GIRDER DETAILS | DATE 5-1-68

REVISIONS
6-7-68

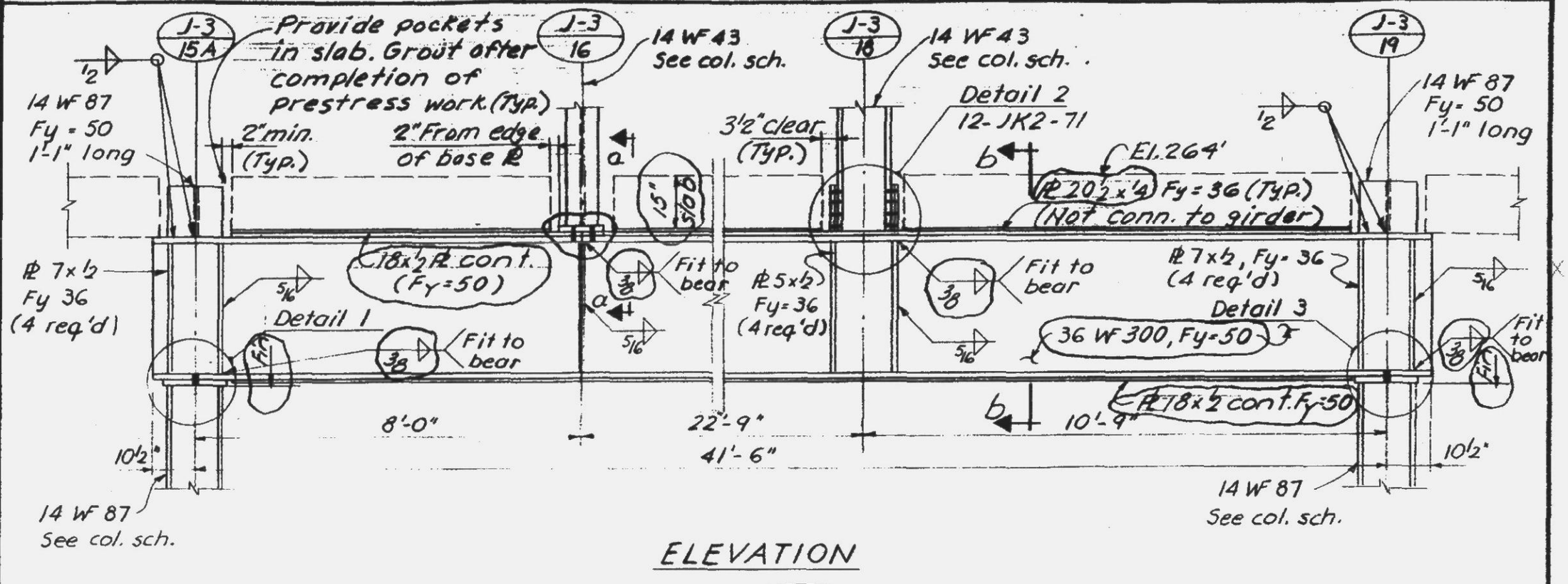

ELEVATION

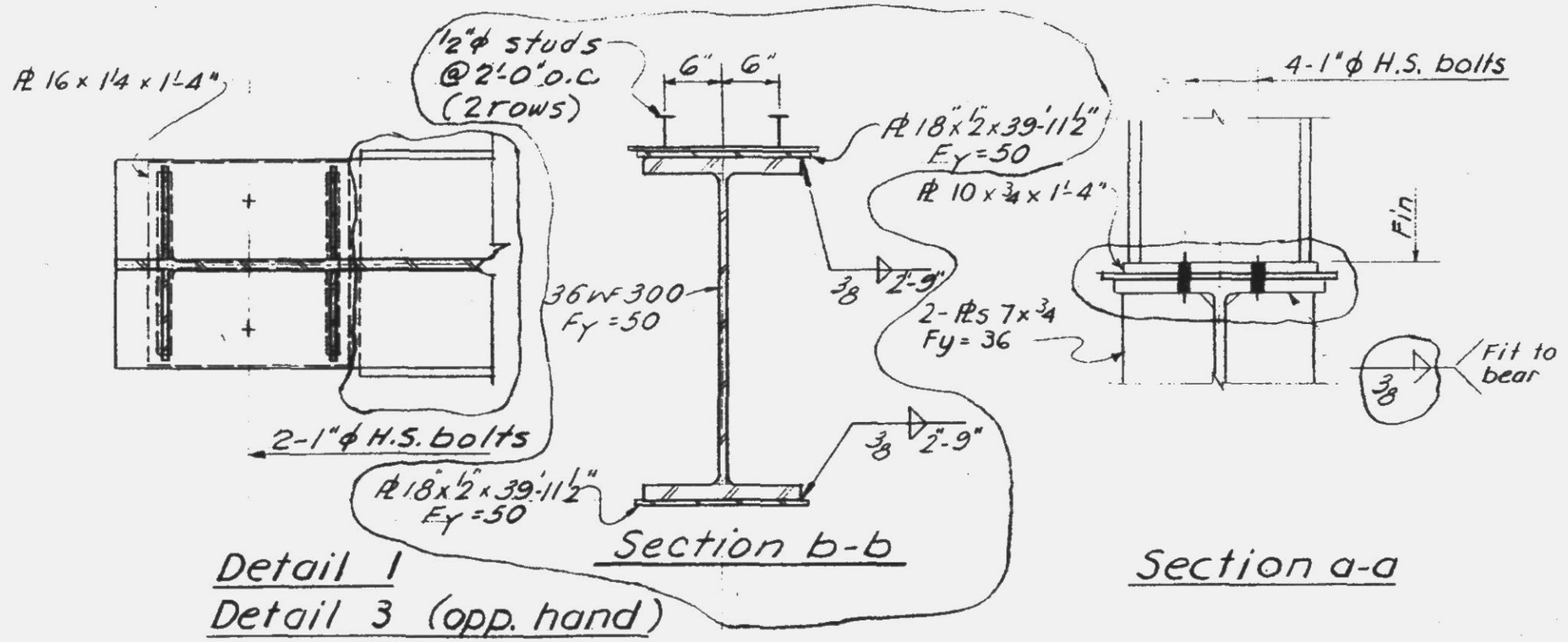

LICENSED PROFESSIONAL ENGINEER LESLIE E. ROBERTSON No. 34350 UNIVERSITY OF THE STATE OF NEW YORK

12-JK2-72

SKILLING - HELLE - CHRISTIANSEN - ROBERTSON — Structural & Civil Engineers

PROJECT: THE WORLD TRADE CENTER — THE DETAILS OF PLATE GIRDER — DATE: 5-1-68

REVISIONS
7-19-68
1-3-69

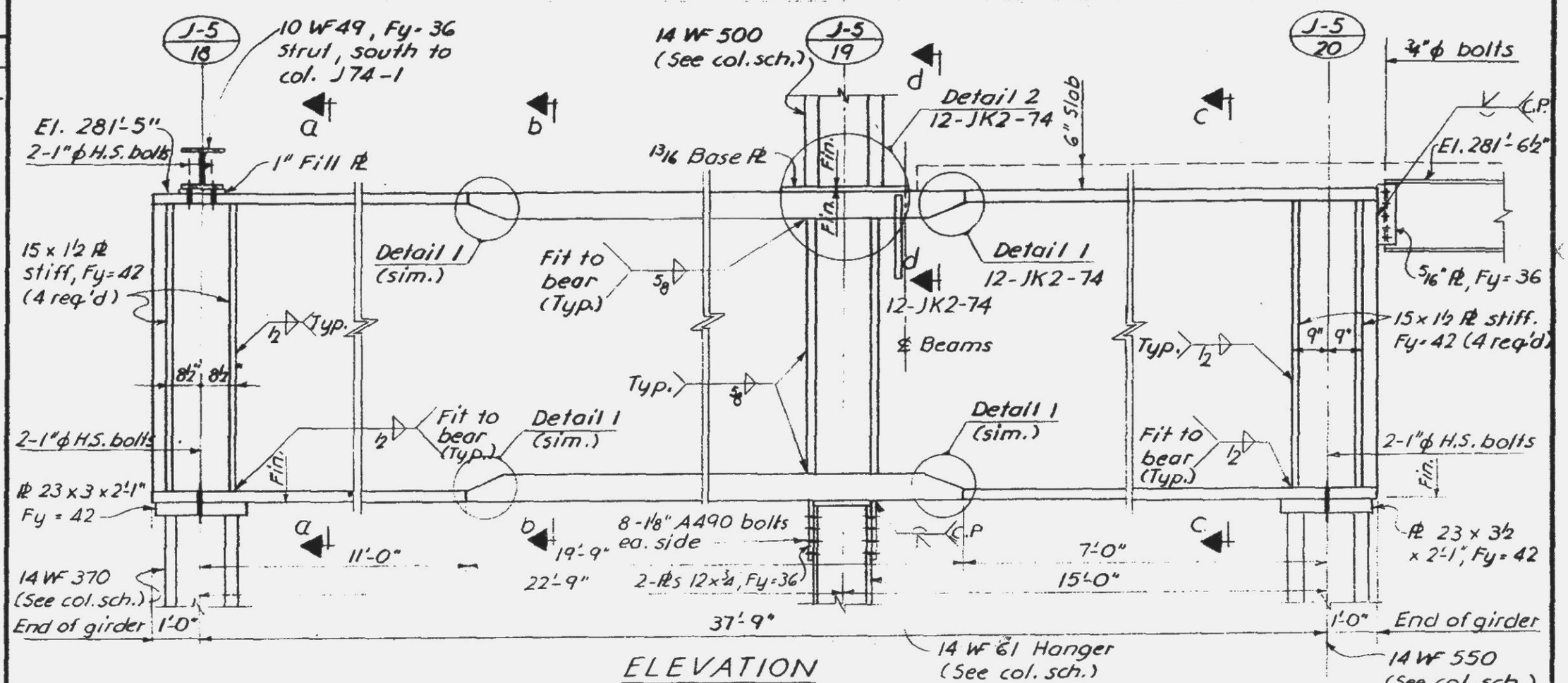

ELEVATION

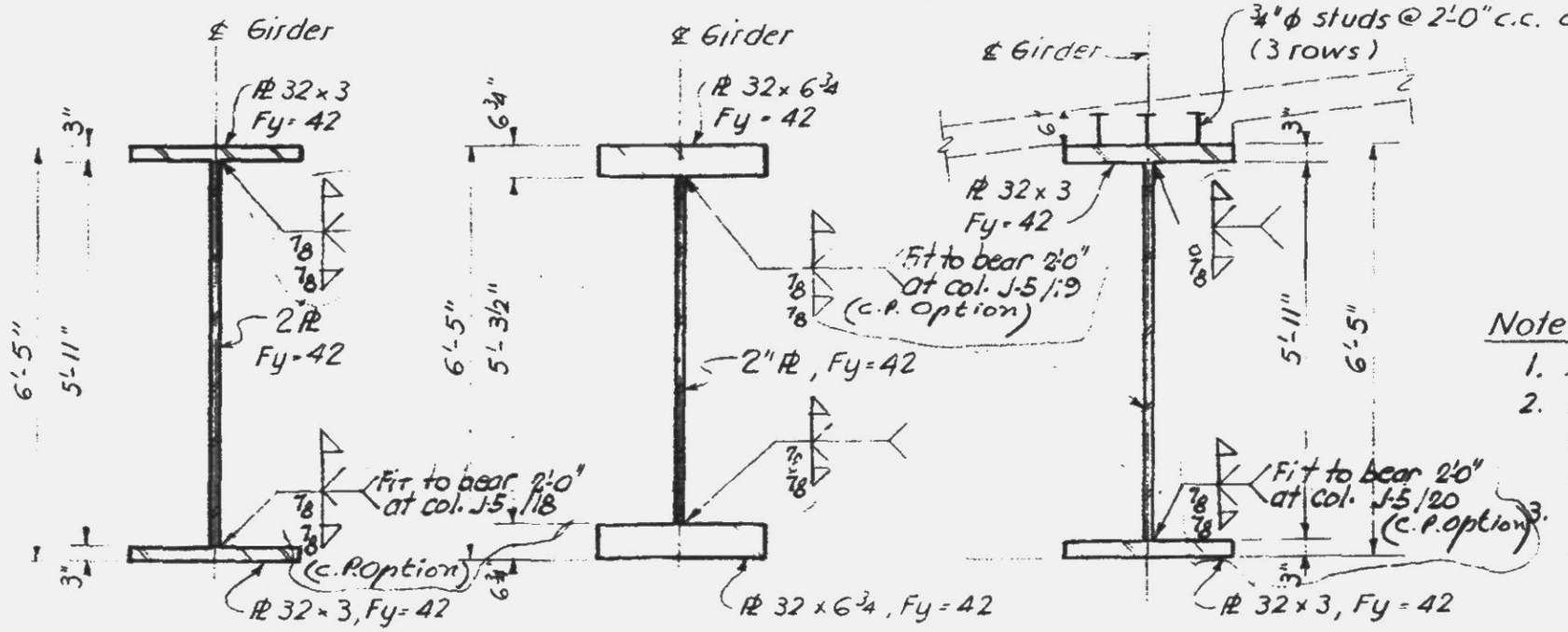

Note:
1. All welds to be E 70xx
2. All bolts to be A325 friction type except as noted.
3. Col. cap Pl detail sim. to Detail 104 (10-JK2-7)

LICENSED PROFESSIONAL ENGINEER — LESLIE E. ROBERTSON — No. 24360 — UNIVERSITY OF THE STATE OF NEW YORK

DRAWN S.T.M.
REVIEWED E.L.

12-JK2-73

SKILLING - HELLE - CHRISTIANSEN - ROBERTSON Structural & Civil Engineers

PROJECT THE WORLD TRADE CENTER | TITLE DETAIL OF PLATE GIRDER | DATE 5-1-68

REVISIONS

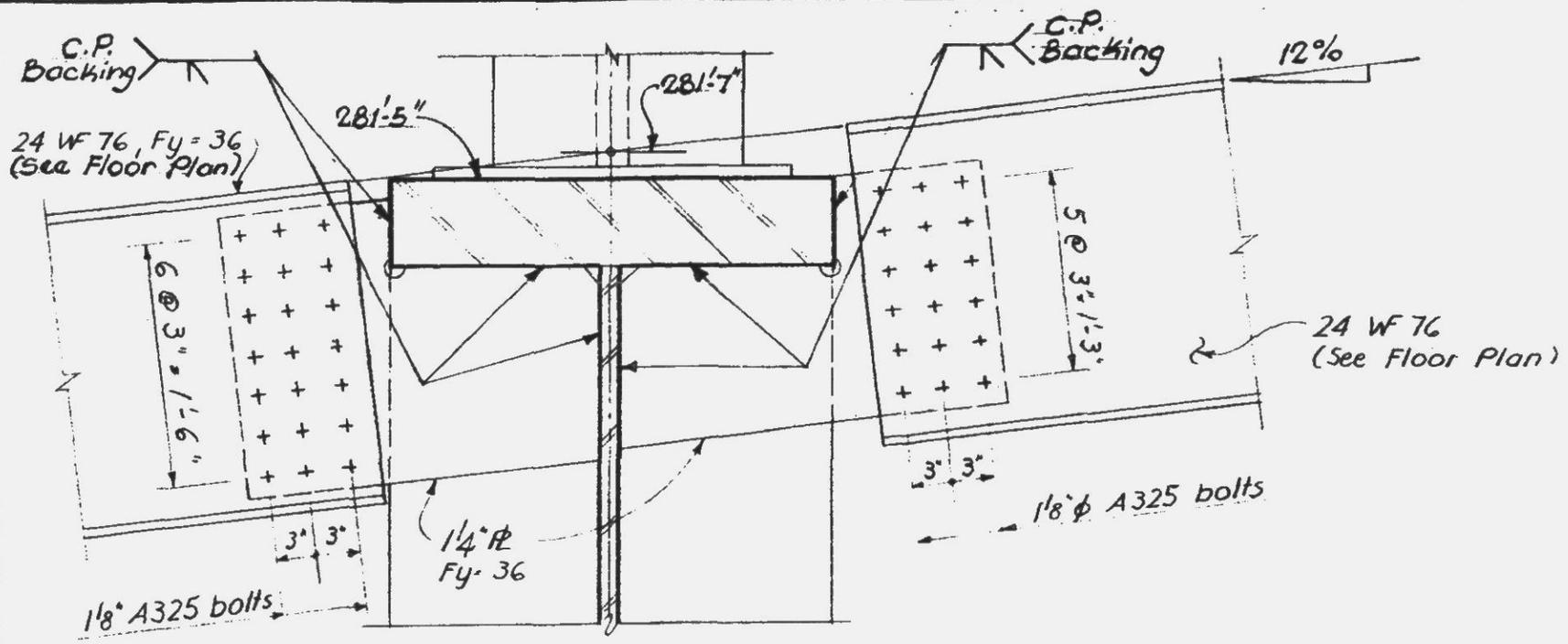

Section d-d

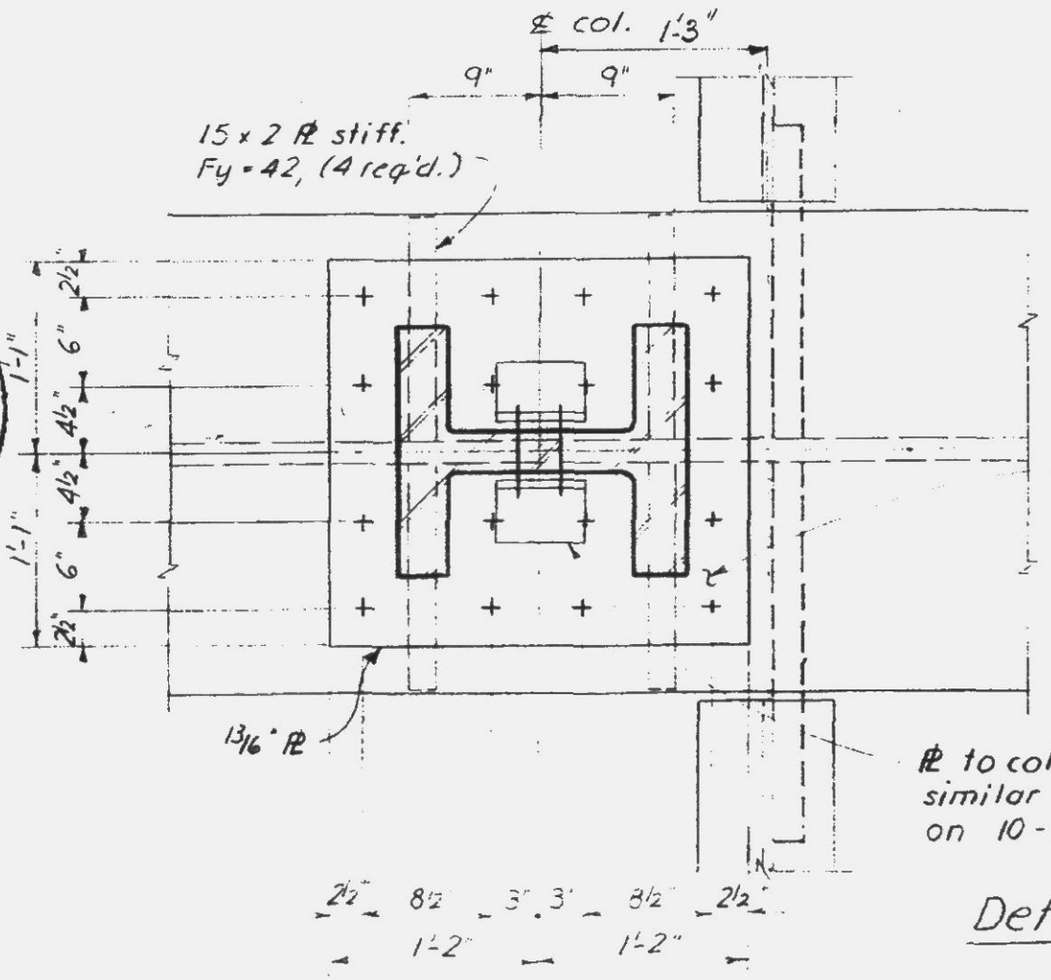

Detail 2

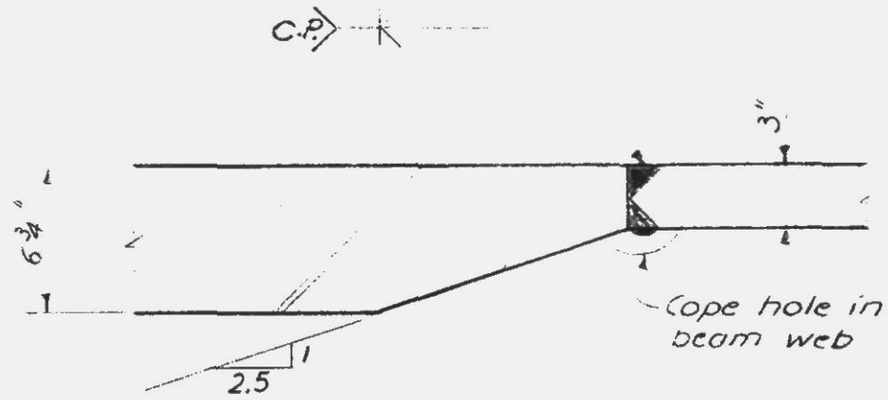

Detail 1

13/16" PL ℄ C50L high tensile Huck bolts 7/8" ϕ (90° countersunk). Similar to Det. 3 & 4 12-JK2-57.

LICENSED PROFESSIONAL ENGINEER LESLIE E. ROBERTSON No. 54350 UNIVERSITY OF THE STATE OF NEW YORK

12-JK2-74

SKILLING - HELLE - CHRISTIANSEN - ROBERTSON — Structural & Civil Engineers

PROJECT: THE WORLD TRADE CENTER | TITLE: DETAIL OF PLATE GIRDER | DATE: 5-1-68

REVISIONS
6-7-68
7-19-68
1-3-69

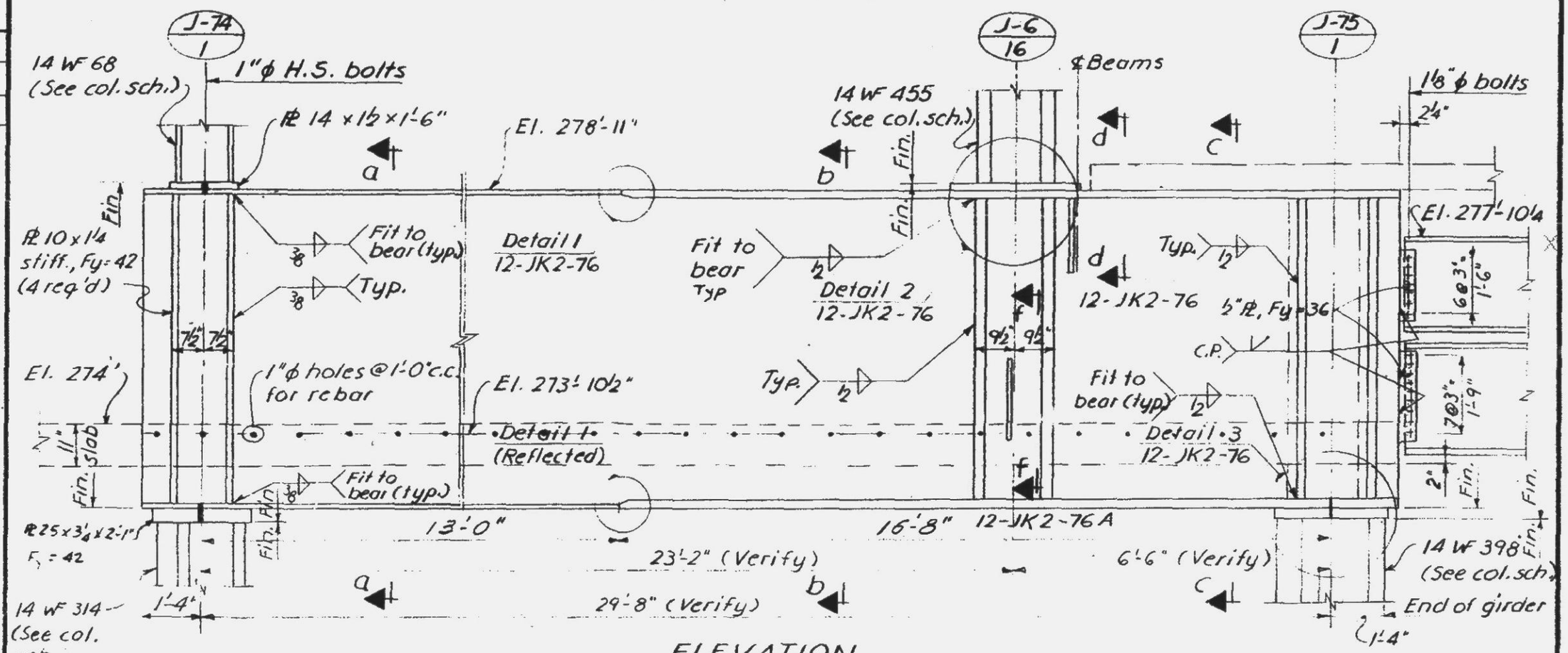

ELEVATION

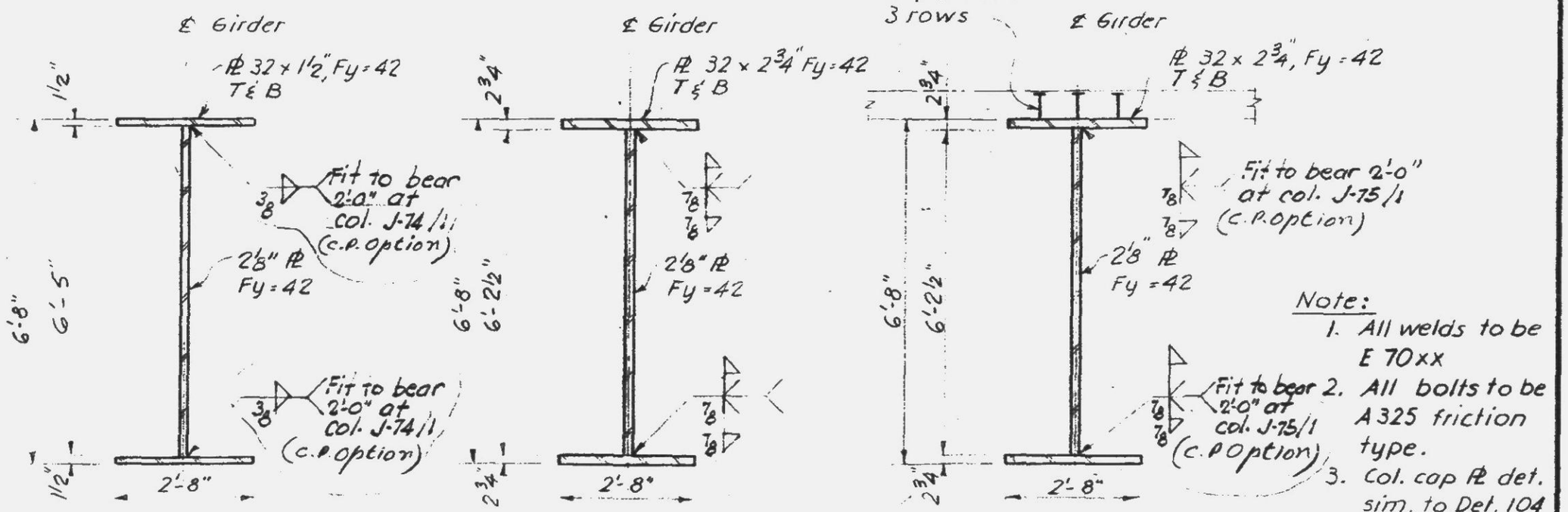

Section a-a | Section b-b | Section c-c

Note:
1. All welds to be E 70xx

DRAWN S.T.M.
REVIEWED E.L.

12-JK2-75

SKILLING - HELLE - CHRISTIANSEN - ROBERTSON Structural & Civil Engineers

PROJECT THE WORLD TRADE CENTER TITLE DETAIL OF PLATE GIRDER DATE 5-1-68

REVISIONS
6-7-68
7-19-68

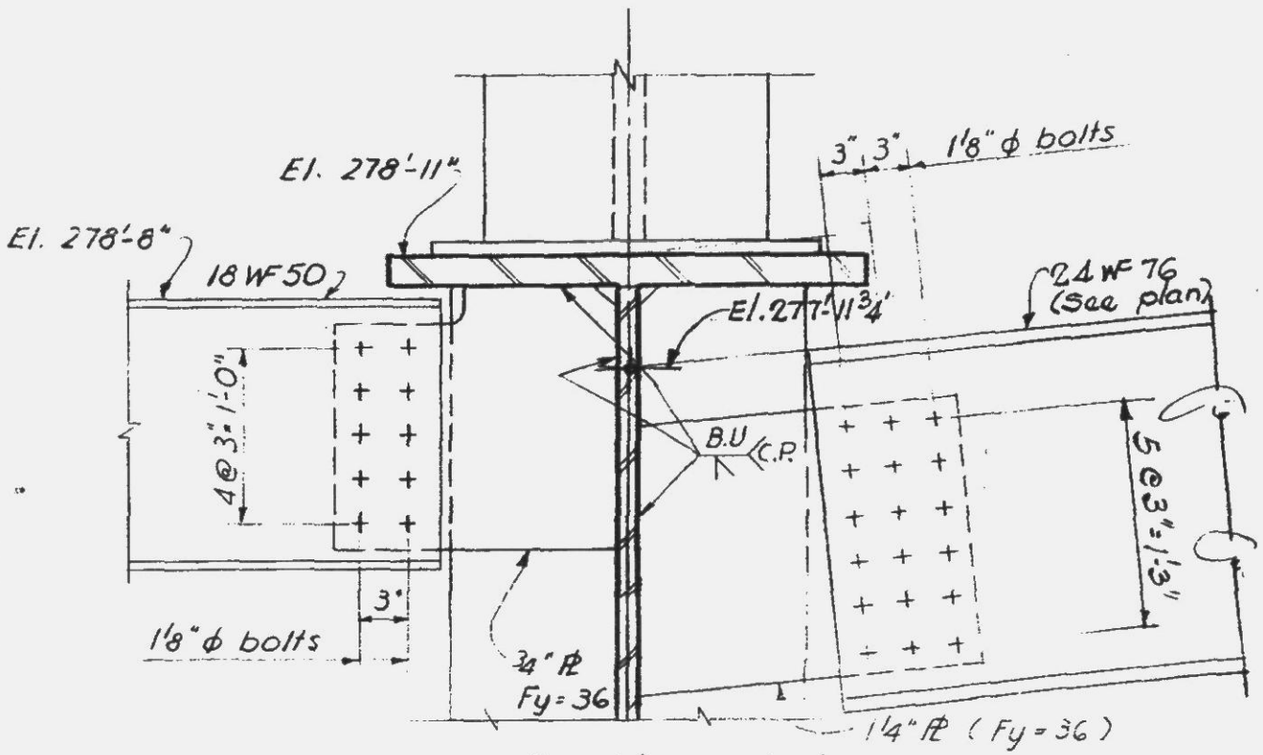

Section d-d

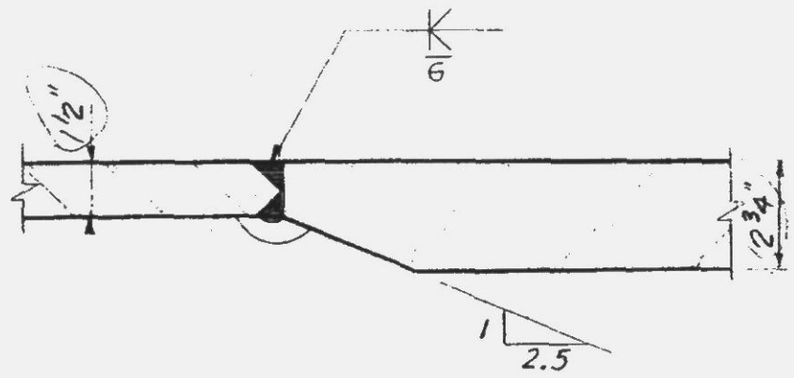

Detail 1

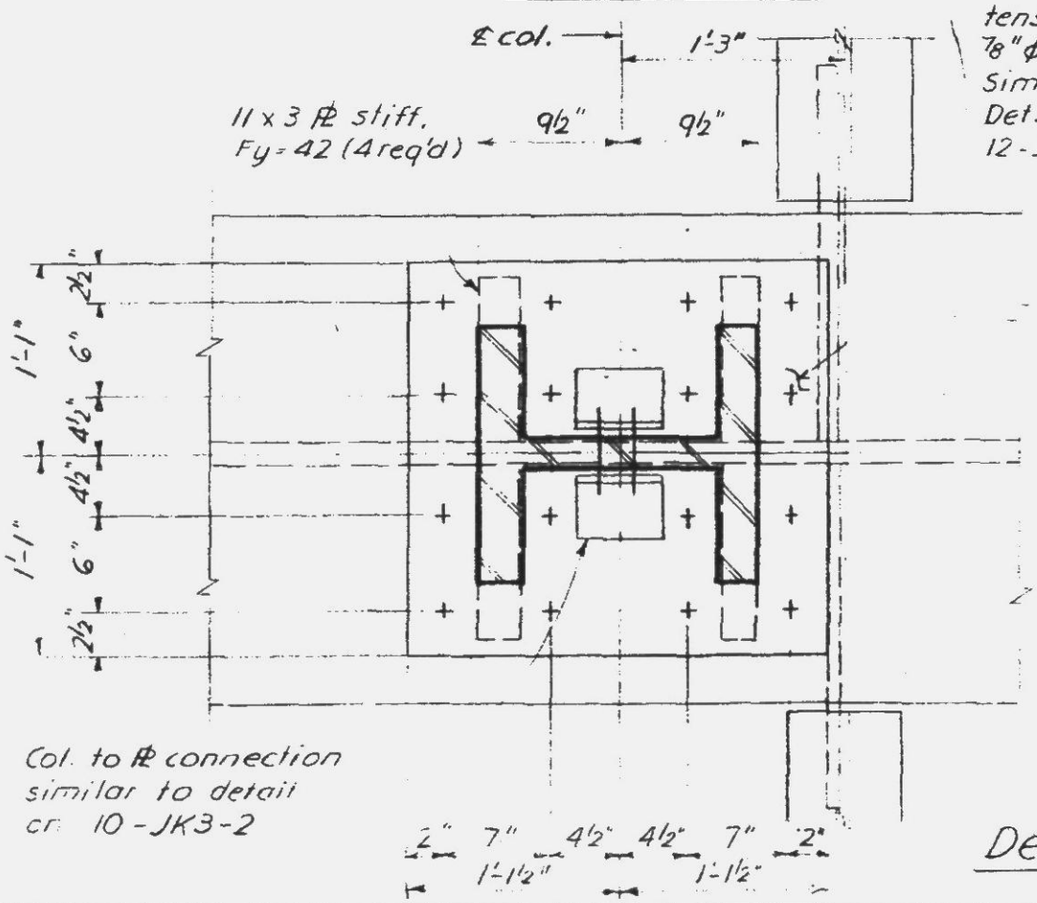

Col. to PL connection similar to detail on 10-JK3-2

Detail 2

13/16" PL ℄ C 50L high tensile Huckbolts 7/8" ϕ (90° countersunk). Similar to Det. 3 ℄ 4 12-JK2-57.

12 x 2 1/2 PL stiff. Fy = 42 (4 req'd)

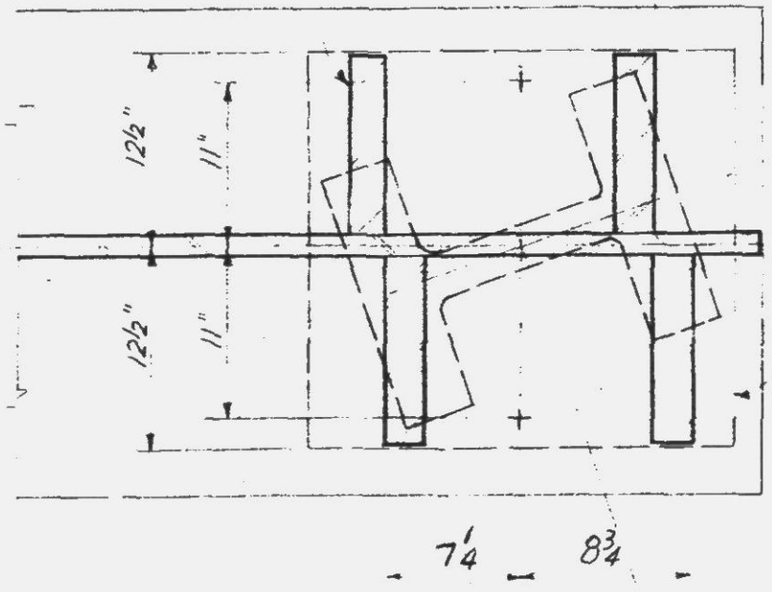

PL 25 x 3 1/2 x 2'-2" Fy = 42

Detail 3

℄ col.

8 3/4 — 7 1/4

1" ϕ H.S. bolts

12-JK2-76

LICENSED PROFESSIONAL ENGINEER LESLIE E. ROBERTSON No. 34360 UNIVERSITY OF THE STATE OF NEW YORK

SKILLING - HELLE - CHRISTIANSEN - ROBERTSON Structural & Civil Engineers

PROJECT THE WORLD TRADE CENTER | TITLE DETAIL OF PLATE GIRDER | DATE 5-1-68

REVISIONS

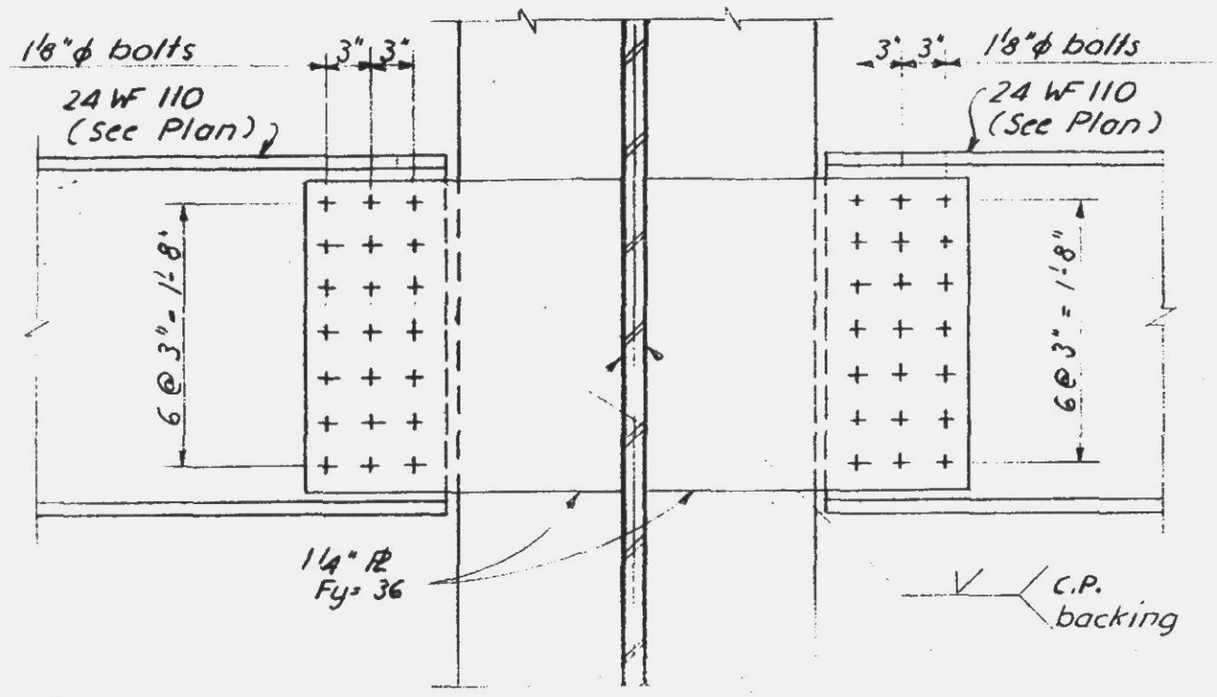

Section f-f

12-JK2-76A

SKILLING - HELLE - CHRISTIANSEN - ROBERTSON — Structural & Civil Engineers

PROJECT THE [illegible] TRADE CENTER | TITLE DETAIL OF PLATE GIRDER | DATE 5-1-68

REVISIONS
6-7-68
7-19-68
1-6-69

Provide temp. bracing until slab is poured

J-74/2 | J-7/15 | J-75/2

14 WF 500 (See col. sch.)

12-JK2-78

14 WF 136 (See col. sch.)

Detail 2 12-JK2-78

Detail 1

Detail 4 12-JK2-78A

El. 278'-8"

13/16" Base Pl

Fin.

Detail 1 (sim.)

Fit to bear (typ.)

Fit to bear (typ.)

Typ.

Typ.

1" ϕ Holes For rebar

Typ.

Detail 1 (sim.)

Fit to bear (typ.)

EL 274'

11" Slab

Detail 3 12-JK2-78

Pl 24 x 3 x 2'-3" Fy = 42
14 WF 550 (See col. sch.)

9½" 9½"

12 x 3 Pl stiff. Fy = 42 (4 req'd)

Detail 1 (sim.)

Fit to bear (typ.)

Pl 11 x 2¾" stiff. Fy = 42 (4 req'd)

8" 8"

1⅛" ϕ H.S. bolts

EL. 273'-8"

C.P.

1'-1½"

½ Pl, Fy = 36

Pl 26 x 5 x 2'-3" Fy = 42

7'-0" ±
13'-3" (verify)

13'-8"

9'-0"
16'-5" (verify)

29'-8" (verify)

End of girder 1'-3"

1'-3"

14 WF 398 (See col. sch.)

ELEVATION

¾" ϕ studs at 2'-0" c.c. 3 rows

℄ Girder

Pl 32 x 2⅜" Fy = 42, T & B

Fit to bear 2'-0" at col. J-75/2 (C.P. Option)

1 13/16" Pl Fy = 42

Fit to bear 2'-0" at cols. J-75/2 & J-74/2 (C.P. Option)

6'-8"
6'-3¼"
2⅜"

Pl 32 x 4¾" Fy = 42 T & B

Fit to bear 2'-0" at col. J-7/15 (C.P. Option)

6'-8"
5'-10½"
4¾"

1 13/16" Pl Fy = 42

32"

Section a-a

Section b-b

C.P.

2.5

Detail 1

Note:
1. All welds to be E70xx.
2. All bolts to be A325 friction type except as noted.
3. Col. cap Pl Detail similar to Detail 104 (10-JK2-7).

LICENSED PROFESSIONAL ENGINEER LESLIE E. ROBERTSON No. 24980 STATE OF [illegible]

DRAWN S.T.M.
REVIEWED E.L.

12-JK2-77

SKILLING - HELLE - CHRISTIANSEN - ROBERTSON Structural & Civil Engineers

PROJECT THE WORLD TRADE CENTER | TITLE DETAIL OF PLATE GIRDER | DATE 5-1-68

REVISIONS

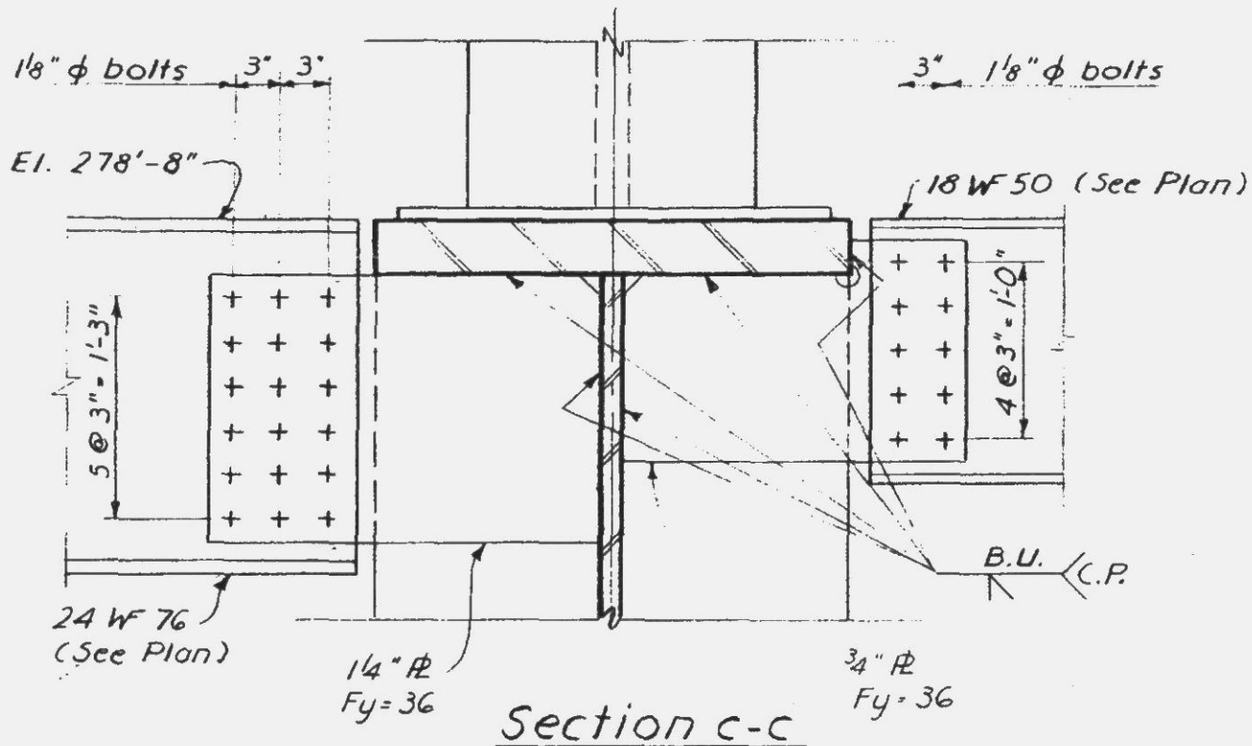

Section c-c

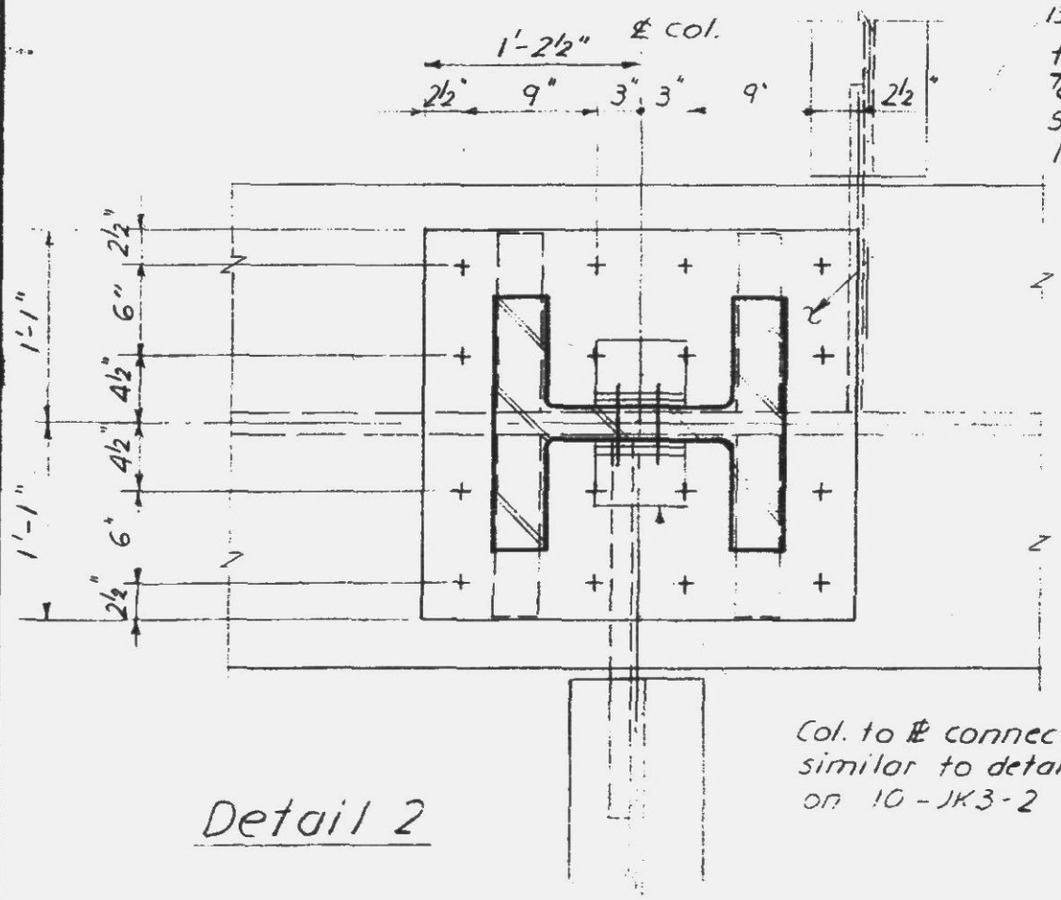

Detail 2

13/16" PL ϕ C50L high tensile Huck bolts ⅞" ϕ (90° countersunk). Similar to Det. 3 & 4 12-JK2-57.

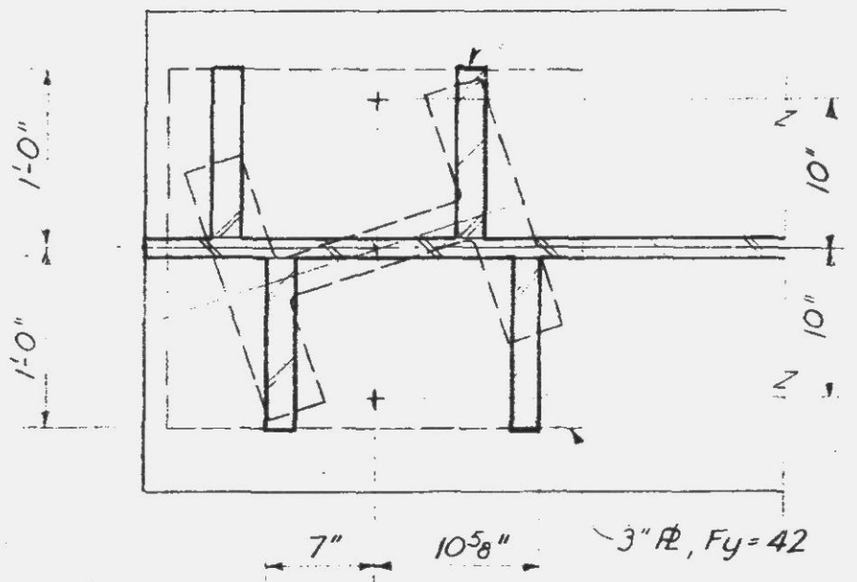

Detail 3

Col. to PL connection similar to detail on 10-JK3-2

LICENSED PROFESSIONAL ENGINEER
LESLIE E. ROBERTSON
No. 34260
UNIVERSITY OF THE STATE OF NEW YORK

12-JK2-78

SKILLING - HELLE - CHRISTIANSEN - ROBERTSON — Structural & Civil Engineers

PROJECT THE WORLD TRADE CENTER | TITLE DETAIL OF PLATE GIRDER | DATE 5-1-68

REVISIONS

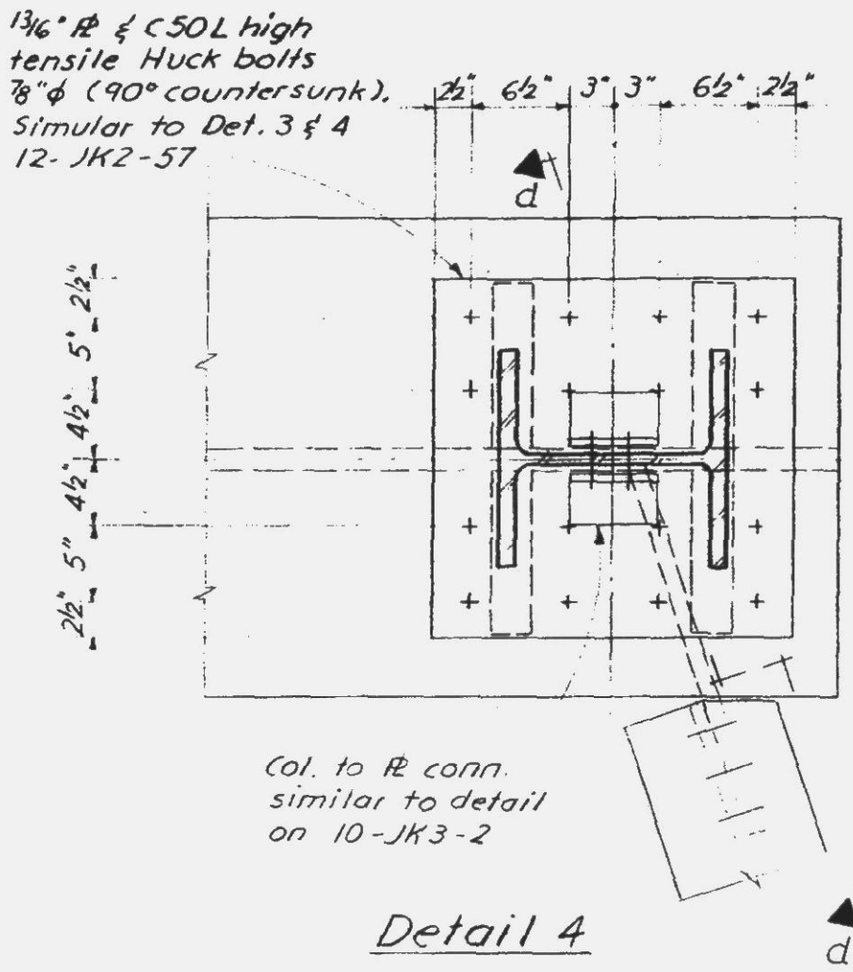

Detail 4

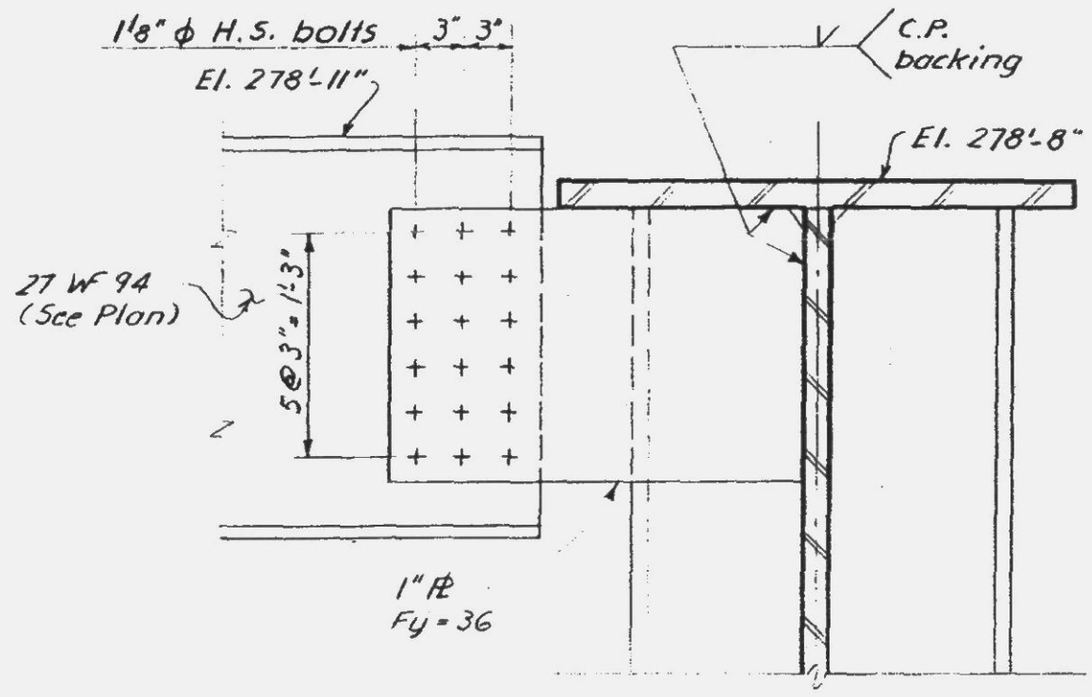

Section d-d

LICENSED PROFESSIONAL ENGINEER LESLIE E. ROBERTSON No. 34350 UNIVERSITY OF THE STATE OF NEW YORK

12-JK2-78A

SKILLING - HELLE - CHRISTIANSEN - ROBERTSON Structural & Civil Engineers

PROJECT THE WORLD TRADE CENTER TITLE DETAIL OF PLATE GIRDER DATE 5-1-68

REVISIONS
7-19-68
10-15-68
1-6-69

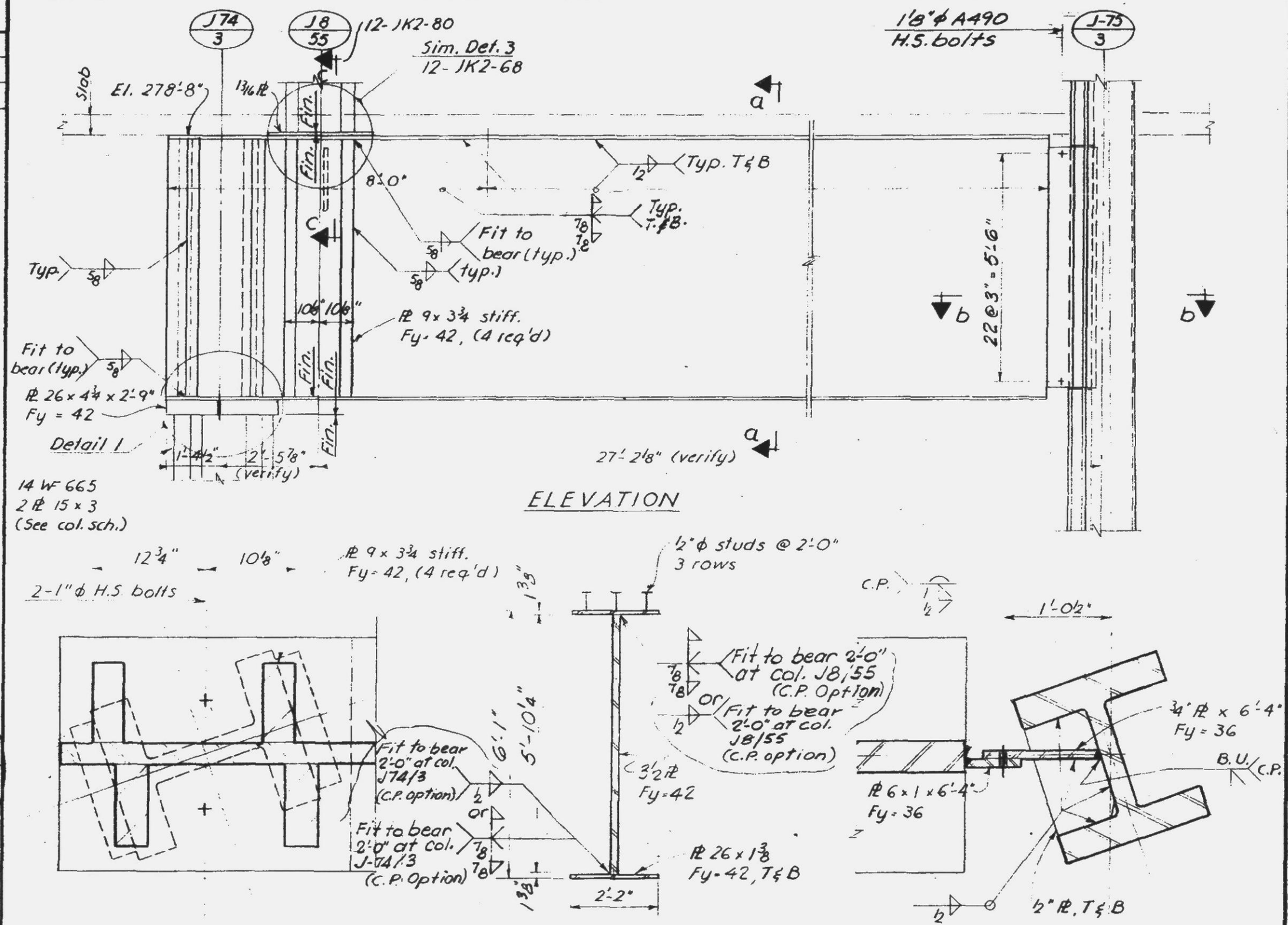

Note:
1. All welds to be E 70 xx.
2. All bolts to be A 325 friction type, unless noted
3. Col. cap PL Detail similar to Detail 104 (10-JK2-7)

LICENSED PROFESSIONAL ENGINEER LESLIE E. ROBERTSON No. 34360 UNIVERSITY OF THE STATE OF NEW YORK

DRAWN S.T.M.
REVIEWED E.L.

12-JK2-79

SKILLING - HELLE - CHRISTIANSEN - ROBERTSON Structural & Civil Engineers

PROJECT THE WORLD TRADE CENTER | TITLE DETAIL OF PLATE GIRDER | DATE 5-1-68

REVISIONS

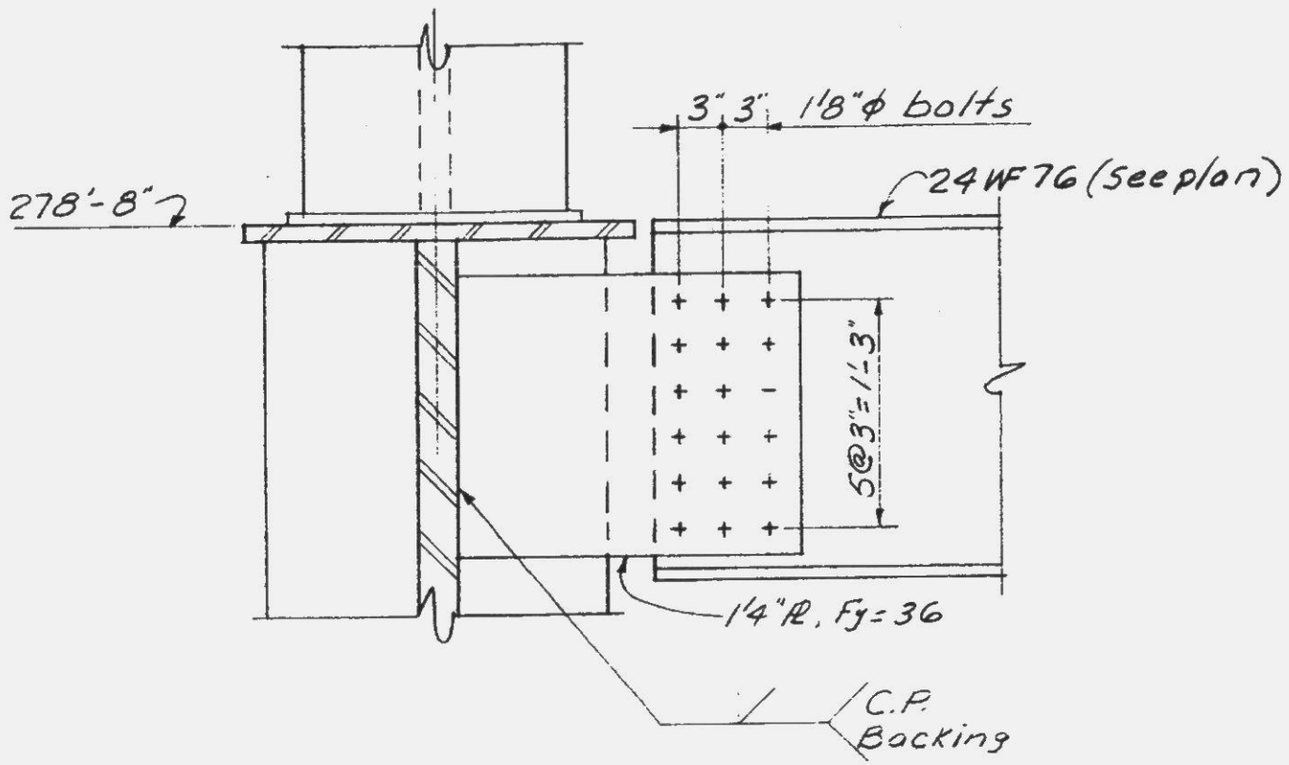

Section C-C

LICENSED ... LESLIE E. ... No. 34360 UNIVERSITY OF THE STATE OF NEW YORK

12-JK2-80

SKILLING - HELLE - CHRISTIANSEN - ROBERTSON — Structural & Civil Engineers

PROJECT: THE WORLD TRADE CENTER

TITLE: DETAIL OF PLATE GIRDER

DATE: 6-7-68

REVISIONS
7-19-68
1-6-69

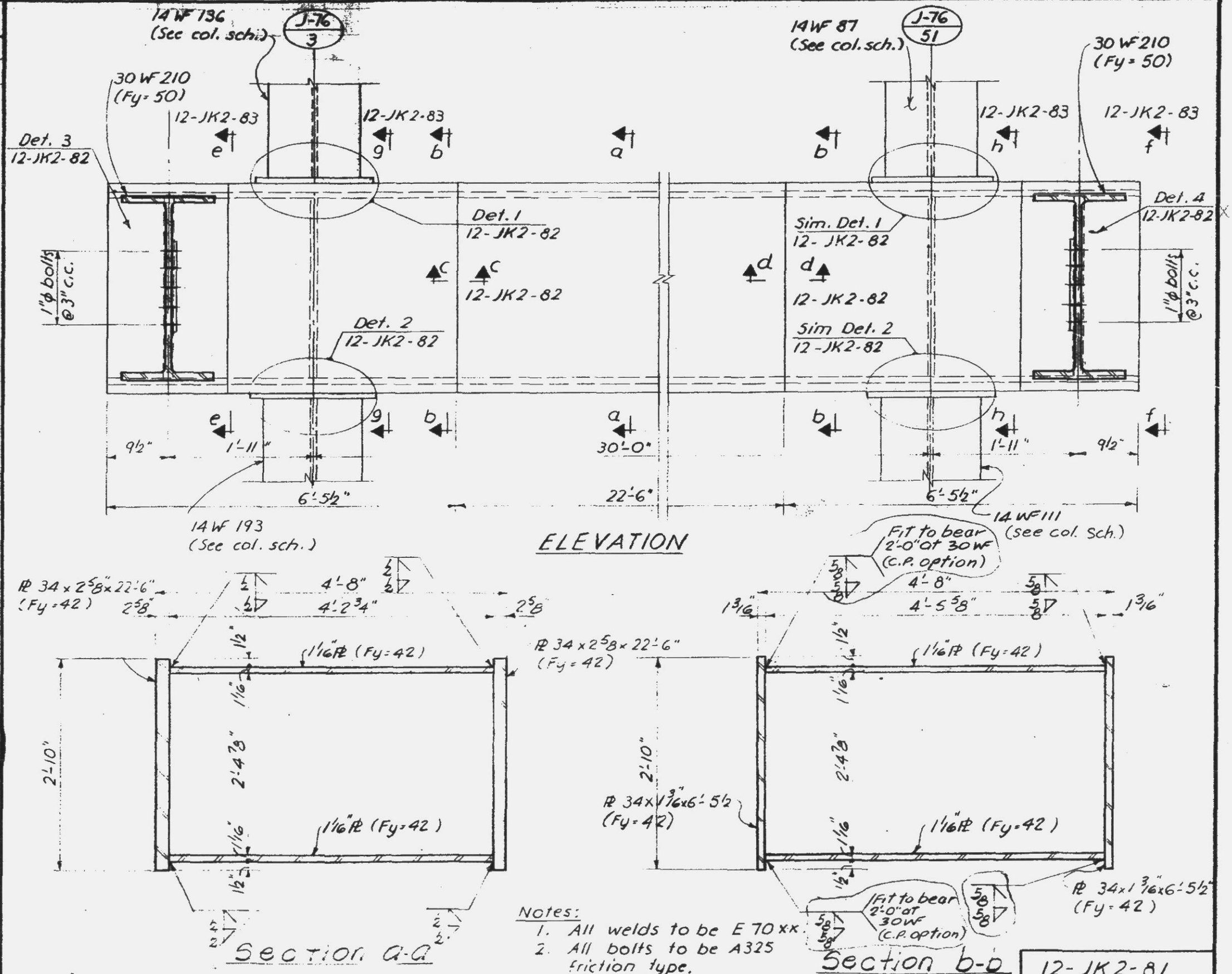

Notes:
1. All welds to be E 70 xx.
2. All bolts to be A325 friction type.

DRAWN S.T.M.

REVIEWED E.L.

LICENSED PROFESSIONAL ENGINEER — LESLIE E. ROBERTSON — No. 34360 — UNIVERSITY OF THE STATE OF NEW YORK

12-JK2-81

SKILLING - HELLE - CHRISTIANSEN - ROBERTSON — Structural & Civil Engineers

PROJECT: THE WORLD TRADE CENTER | TITLE: DETAIL OF PLATE GIRDER | DATE: 6-7-68

REVISIONS
7-19-68

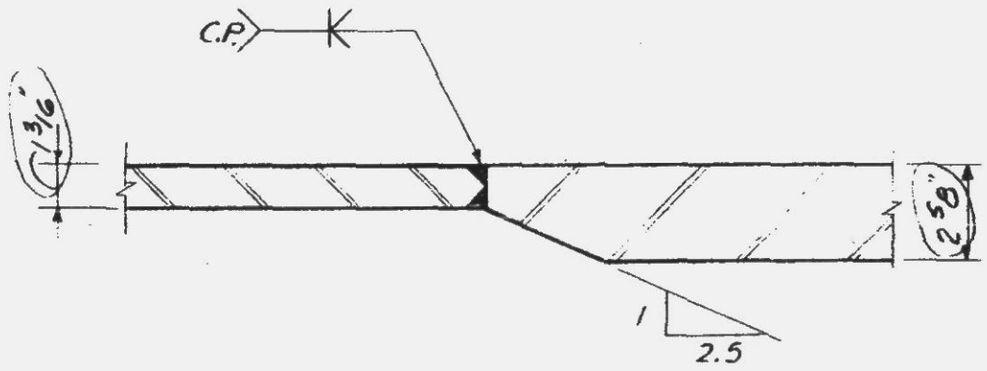

Section c-c (as shown)
Section d-d (opp. hand)

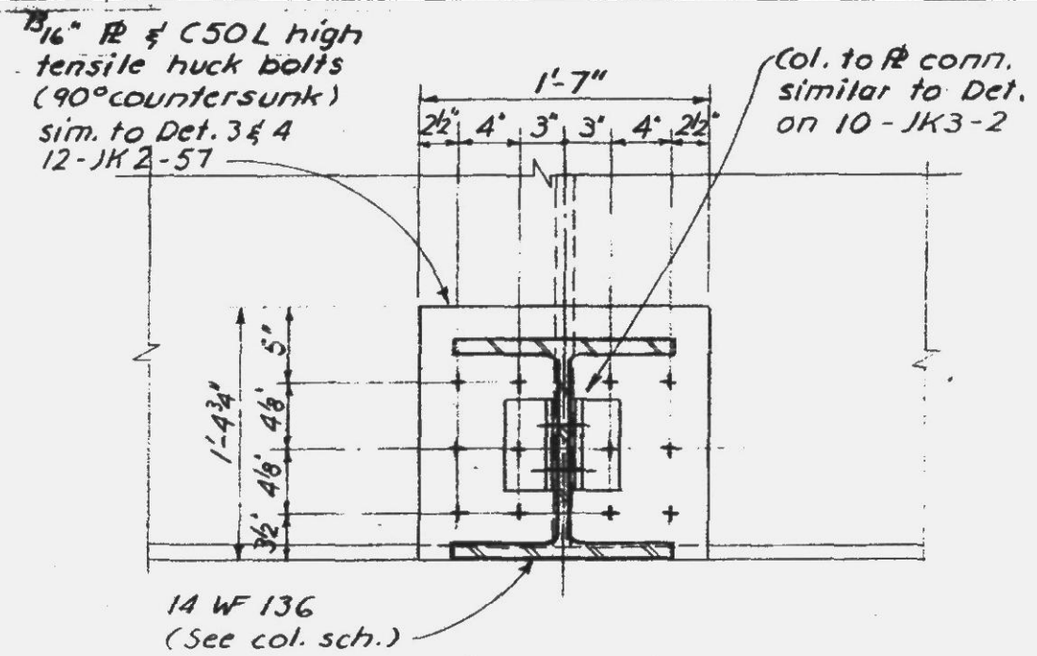

Detail 1

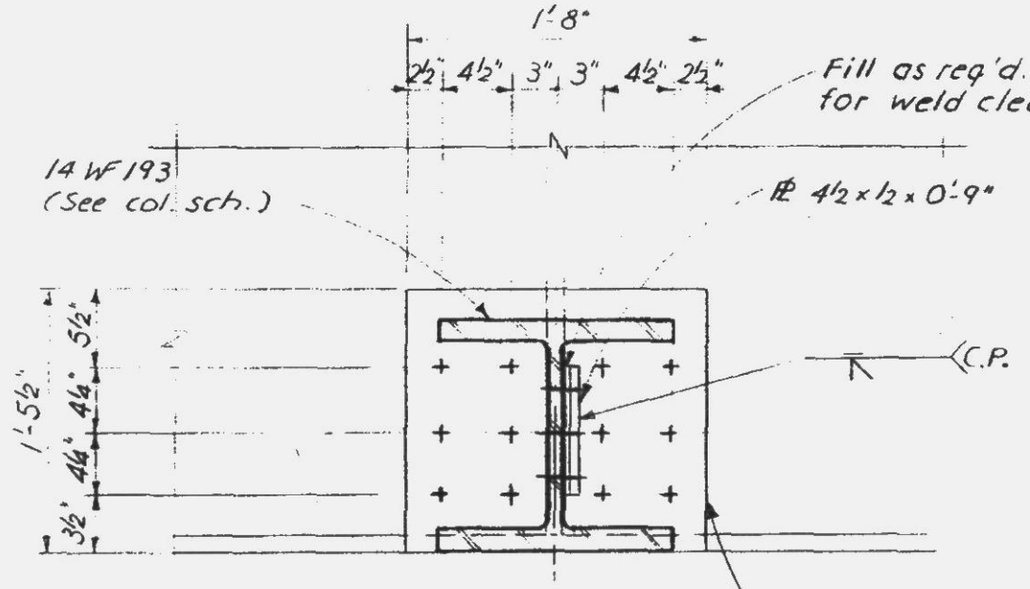

Detail 2
(looking up)

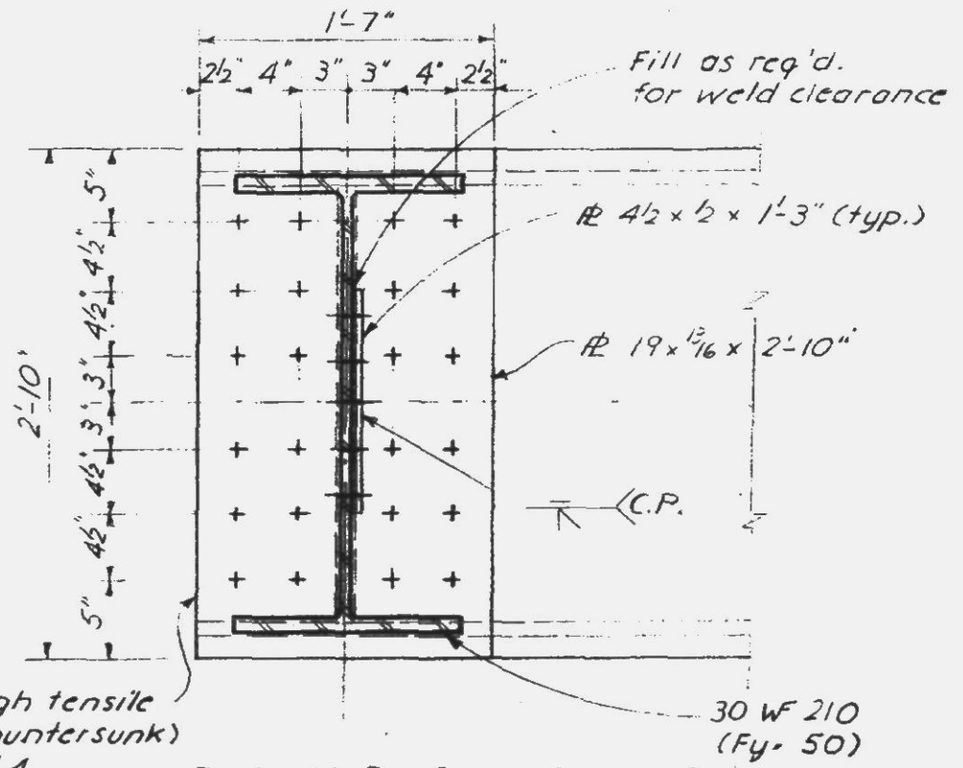

Detail 3 (as shown)
Detail 4 (opp. hand)

Notes:
1. All welds to be E70 xx.
2. All bolts to be A325 friction type.

LICENSED PROFESSIONAL ENGINEER
LESLIE E. ROBERTSON
No. 34360
UNIVERSITY OF THE STATE OF NEW YORK

12-JK2-82

SKILLING - HELLE - CHRISTIANSEN - ROBERTSON — Structural & Civil Engineers

PROJECT: THE WORLD TRADE CENTER | TITLE: DETAILS OF PLATE GIRDER | DATE: 6-7-68

REVISIONS
7-19-68
4-4-69

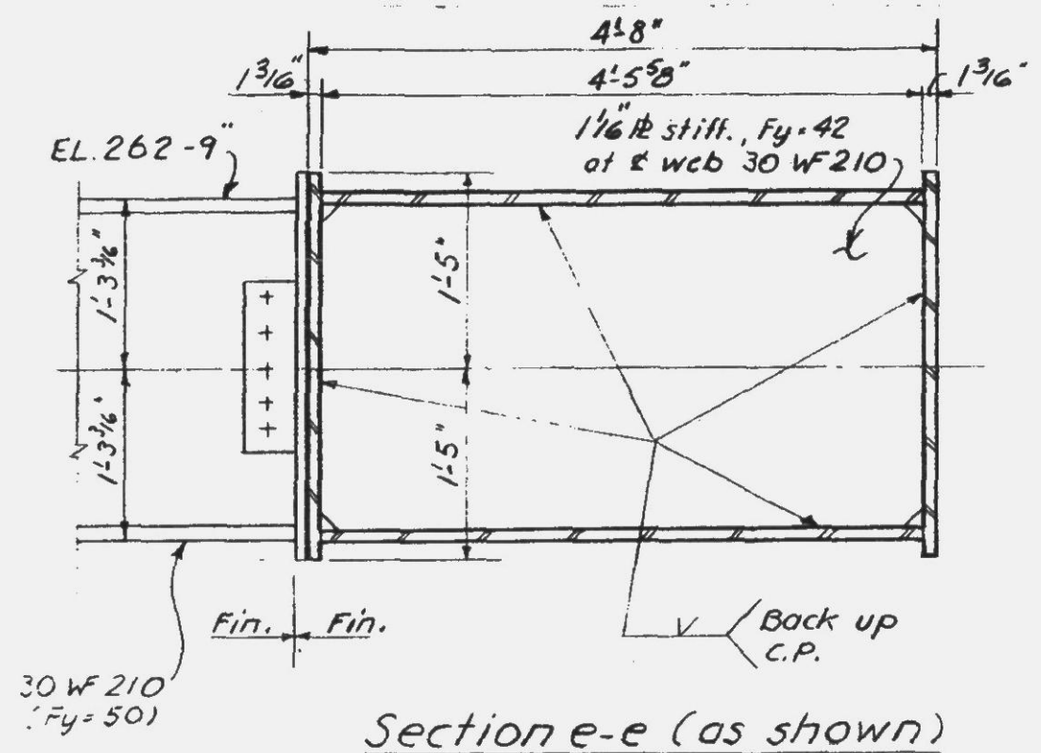

Section e-e (as shown)
Section f-f (opp. hand)

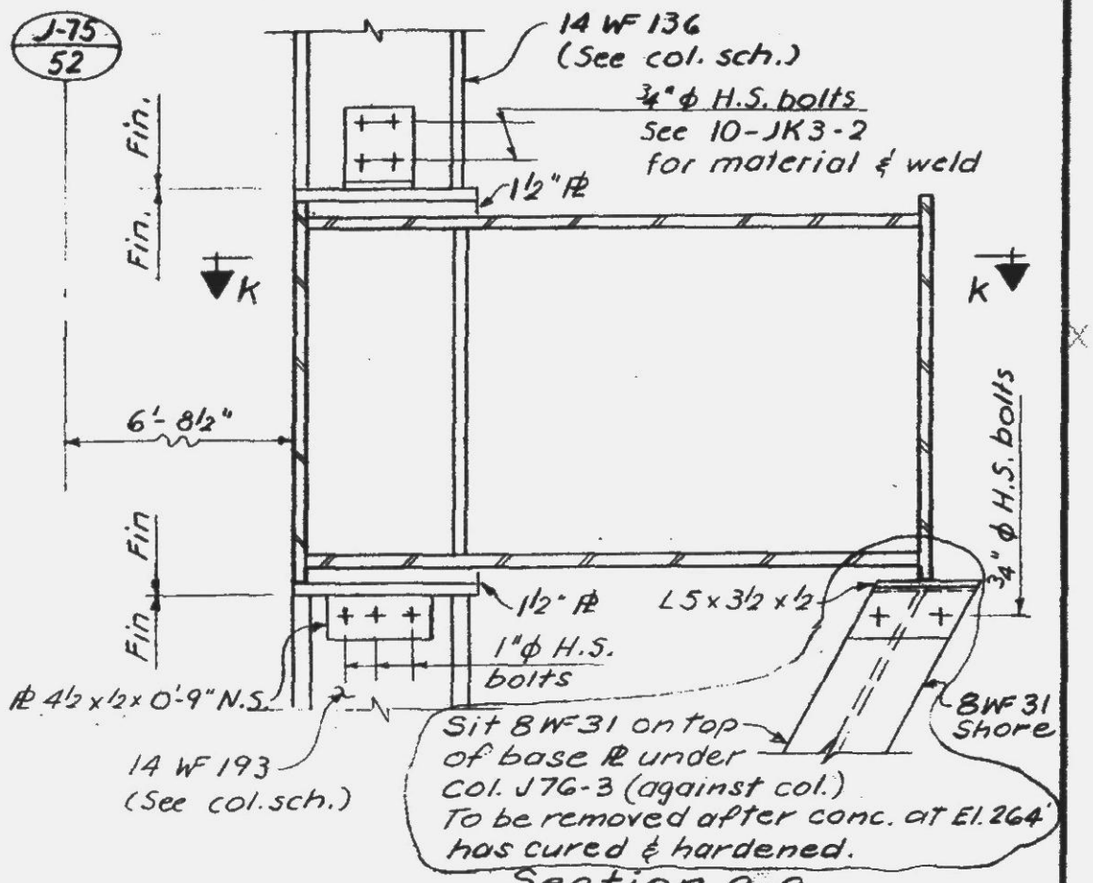

Section g-g

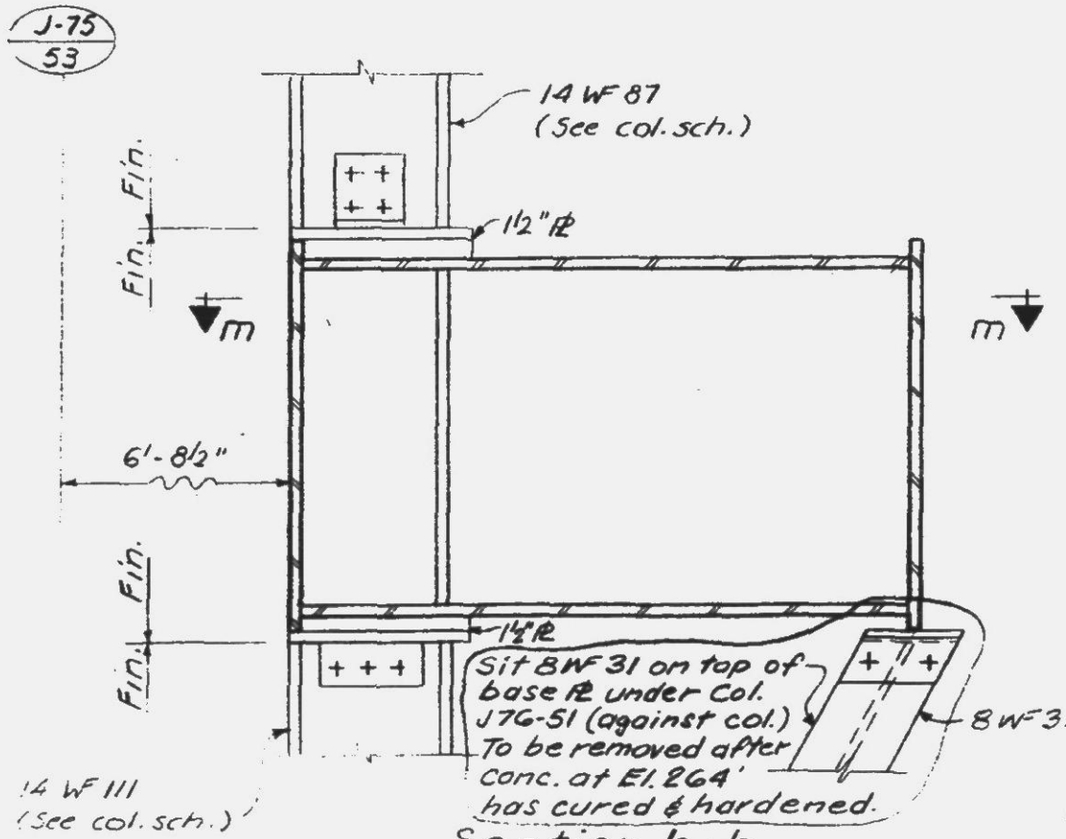

Section h-h
(Details not shown same as Sect. g-g)

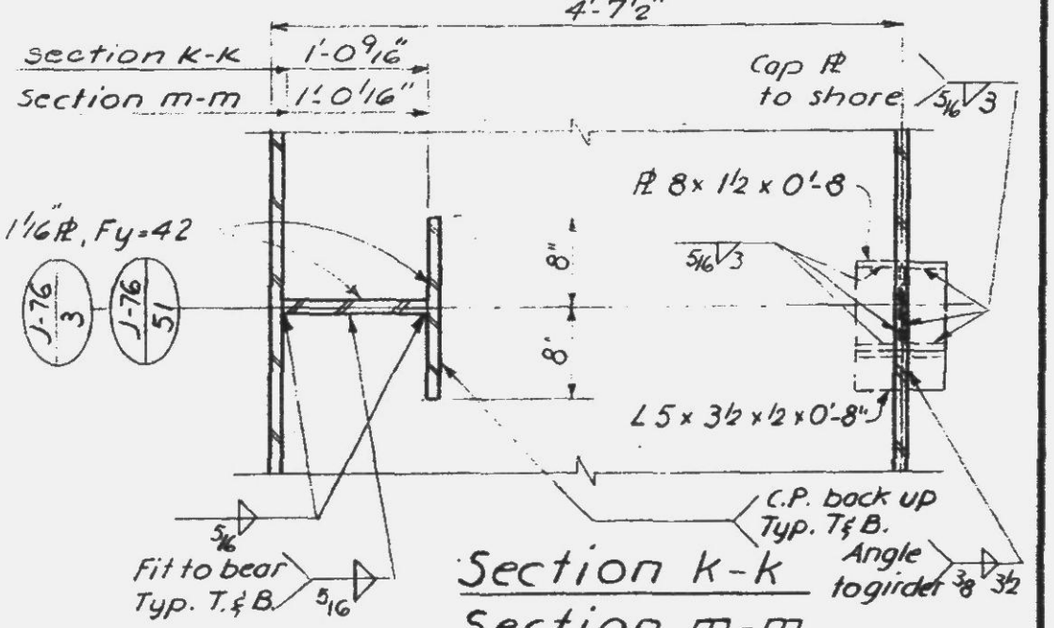

Section K-K
Section m-m

Notes:
1. All welds to be E 70xx
2. All bolts to be A325 friction type.

12-JK2-83

LICENSED PROFESSIONAL ENGINEER — LESLIE E. ROBERTSON — No. 34360 — UNIVERSITY OF THE STATE OF NEW YORK

DRAWN
SC
REVIEWED
E.L.

SKILLING - HELLE - CHRISTIANSEN - ROBERTSON — Structural & Civil Engineers

PROJECT: [illegible] HIGH SCHOOL — GIRDER DETAIL — DATE: 6-1-68

REVISIONS
6-28-68
10-15-68

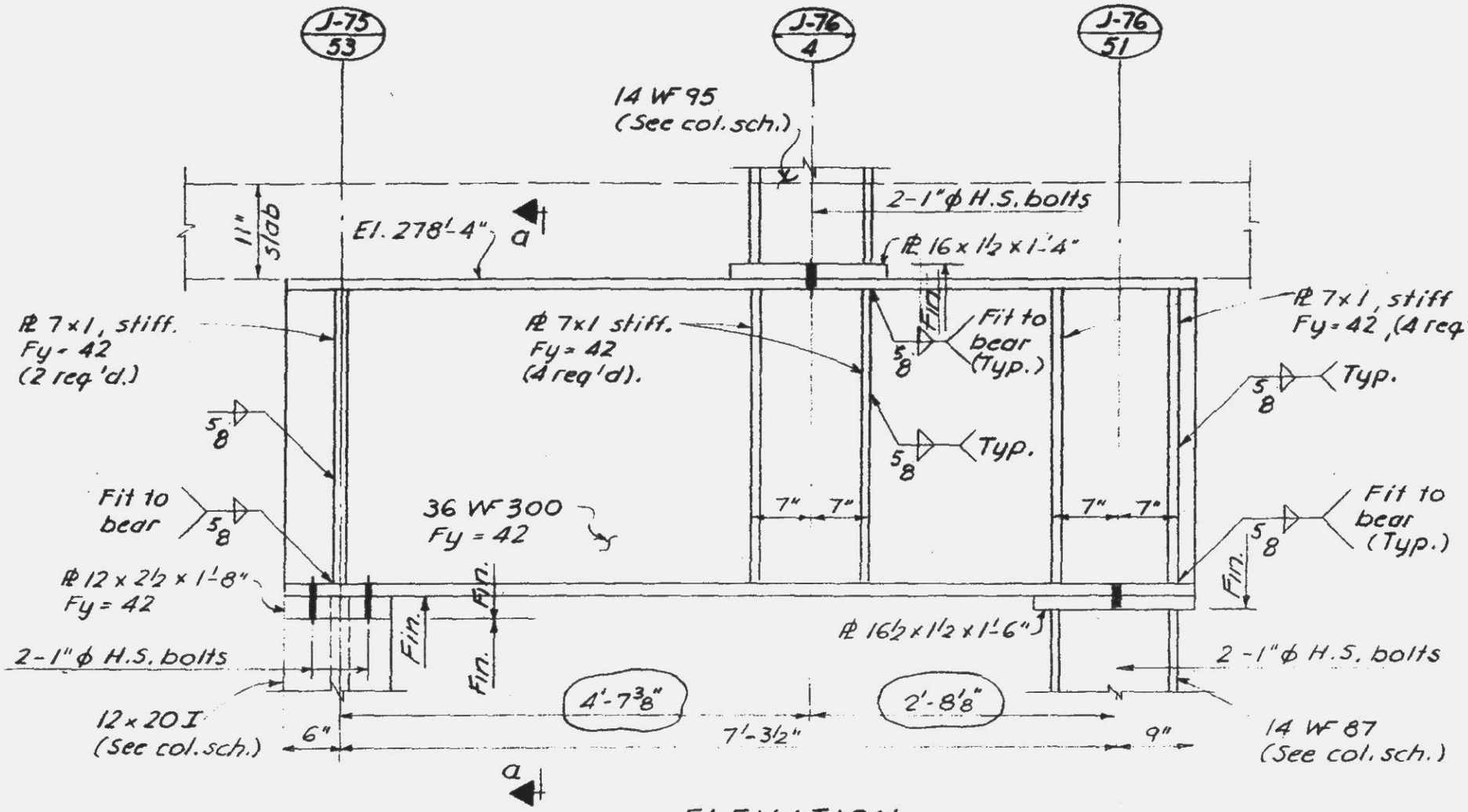

ELEVATION

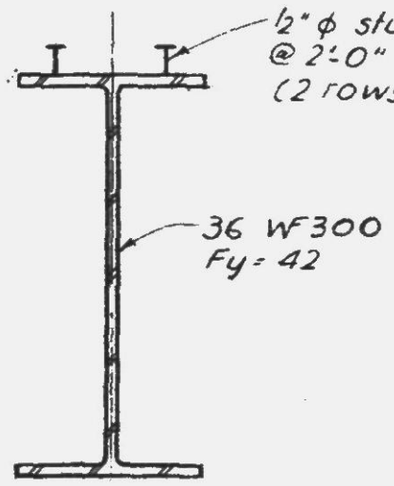

Section a-a

Notes:
1. All welds to be E 70 xx.
2. All bolts to be A-325 friction type.
3. Col. cap PL detail similar to Detail on 10-JK2-7.

LICENSED PROFESSIONAL ENGINEER — LESLIE E. ROBERTSON — No. 34360 — UNIVERSITY OF THE STATE OF NEW YORK

12-JK2-84

SKILLING - HELLE - CHRISTIANSEN - ROBERTSON Structural & Civil Engineers

PROJECT THE WORLD TRADE CENTER | TITLE DETAIL OF PLATE GIRDER | DATE 6-7-68

REVISIONS
7-19-68
1-6-69

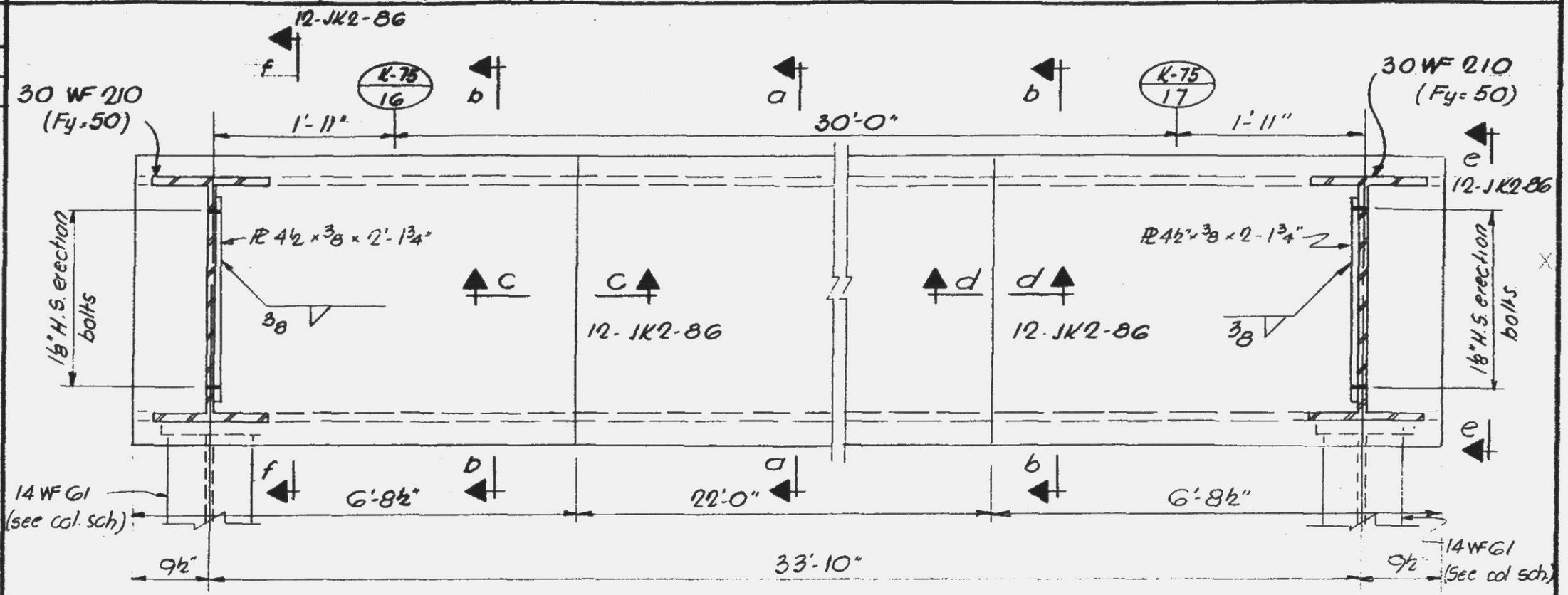

Elevation

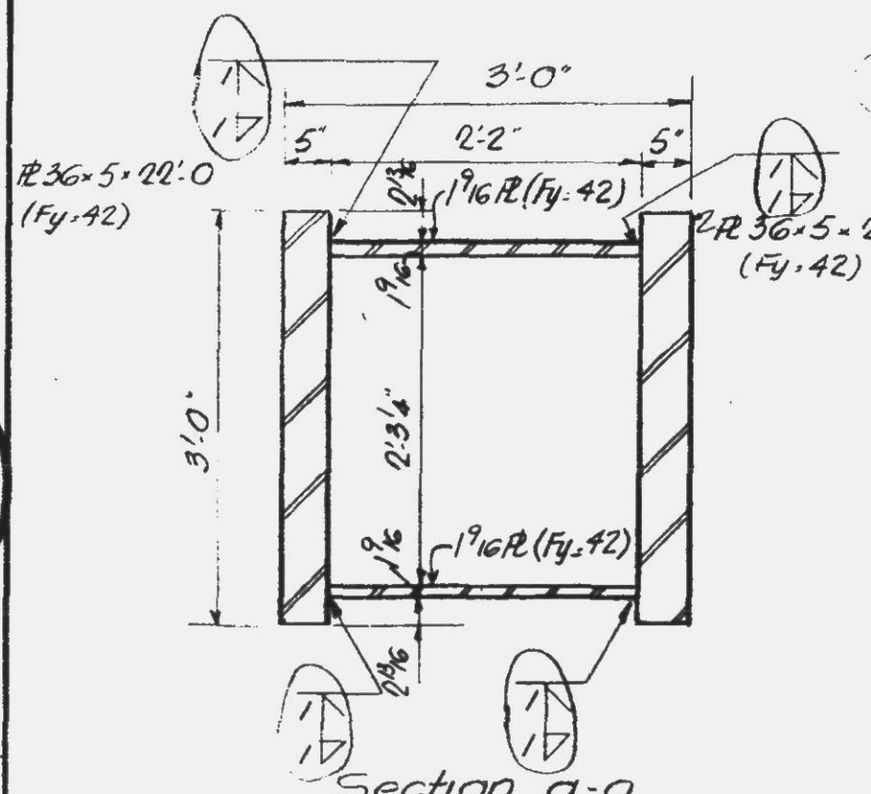

Section a-a

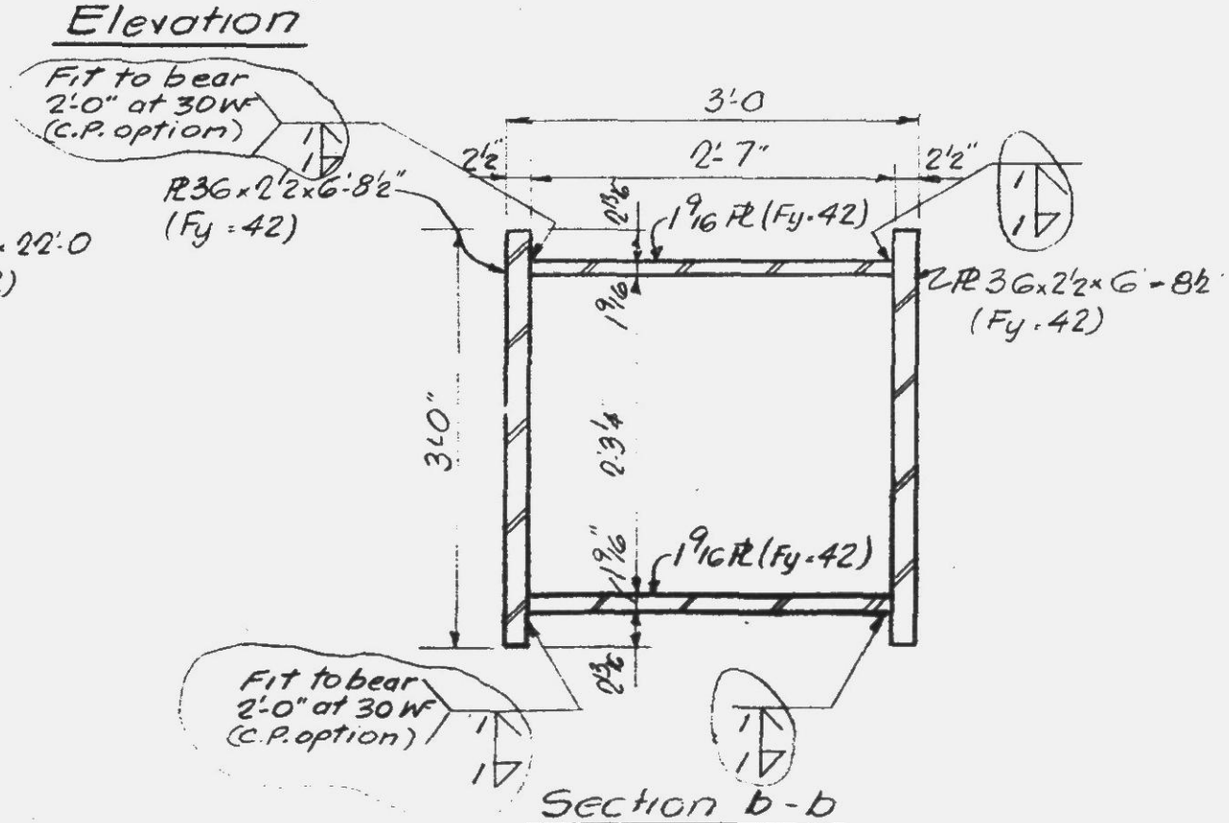

Section b-b

LICENSED PROFESSIONAL ENGINEER
LESLIE E. ROBERTSON
No. 34360
UNIVERSITY OF THE STATE OF NEW YORK

DRAWN A.F.
REVIEWED E.L.

12-JK2-85

SKILLING - HELLE - CHRISTIANSEN - ROBERTSON Structural & Civil Engineers

PROJECT THE WORLD TRADE CENTER | TITLE DETAIL OF PLATE GIRDER | DATE 6-7-68

REVISIONS

7-19-68

12-3-68

2-11-70

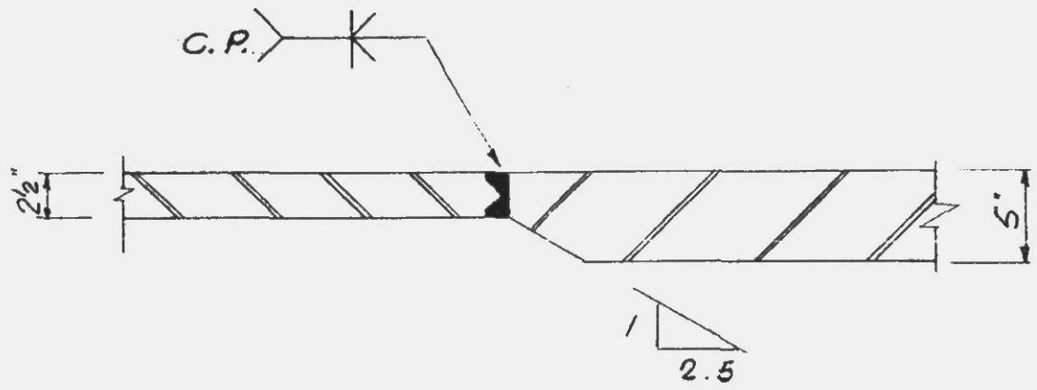

Section c-c (as shown)

Section d-d (opp hand)

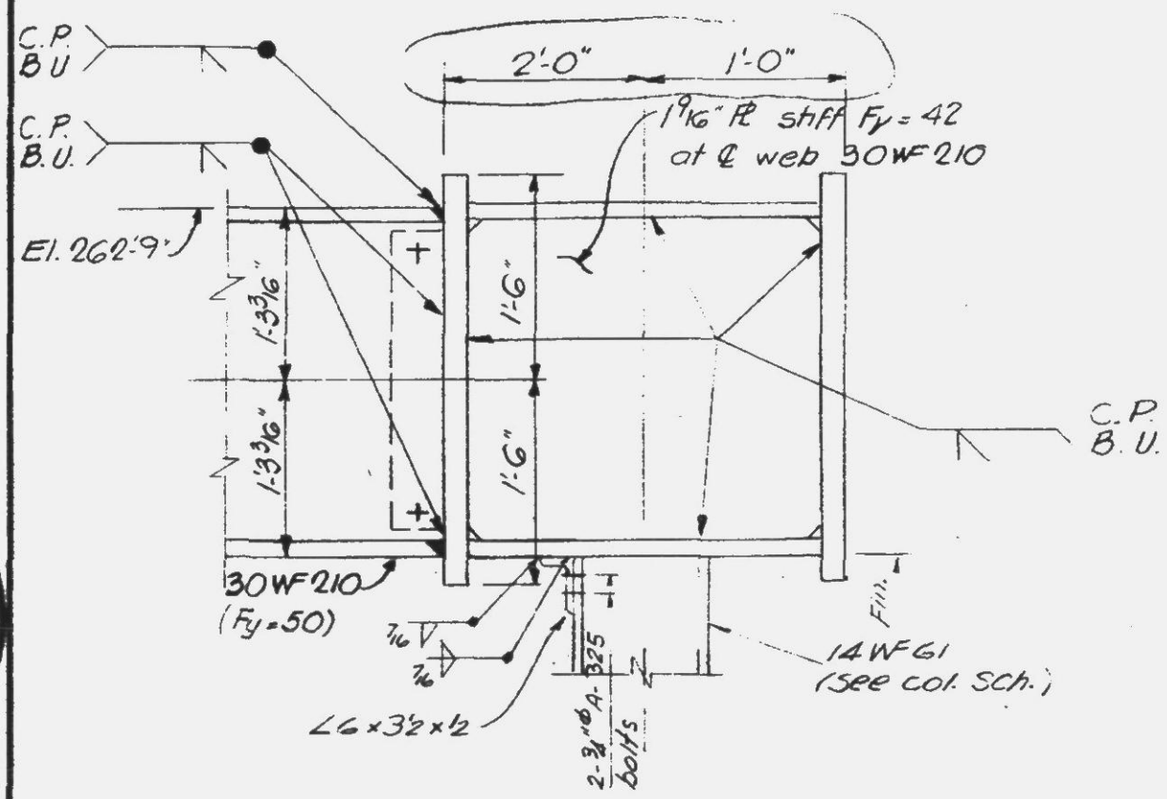

Section e-e (as shown)

Section f-f (opp hand)

Note:
See also, Dwg. SK-4-1-284 (12-22-69)
(Change No. 533.058)

LICENSED PROFESSIONAL ENGINEER
LESLIE E. ROBERTSON
No. 34360
UNIVERSITY OF THE STATE OF NEW YORK

DRAWN
S.C.

REVIEWED
E.L.

12-JK2-86

SKILLING - HELLE - CHRISTIANSEN - ROBERTSON Structural & Civil Engineers

PROJECT THE WORLD TRADE CENTER | TITLE DETAIL OF PLATE GIRDER | DATE 6-11-68

REVISIONS
7-19-68

Provide pockets in slab grout after completion of Prestress work (Typ.)

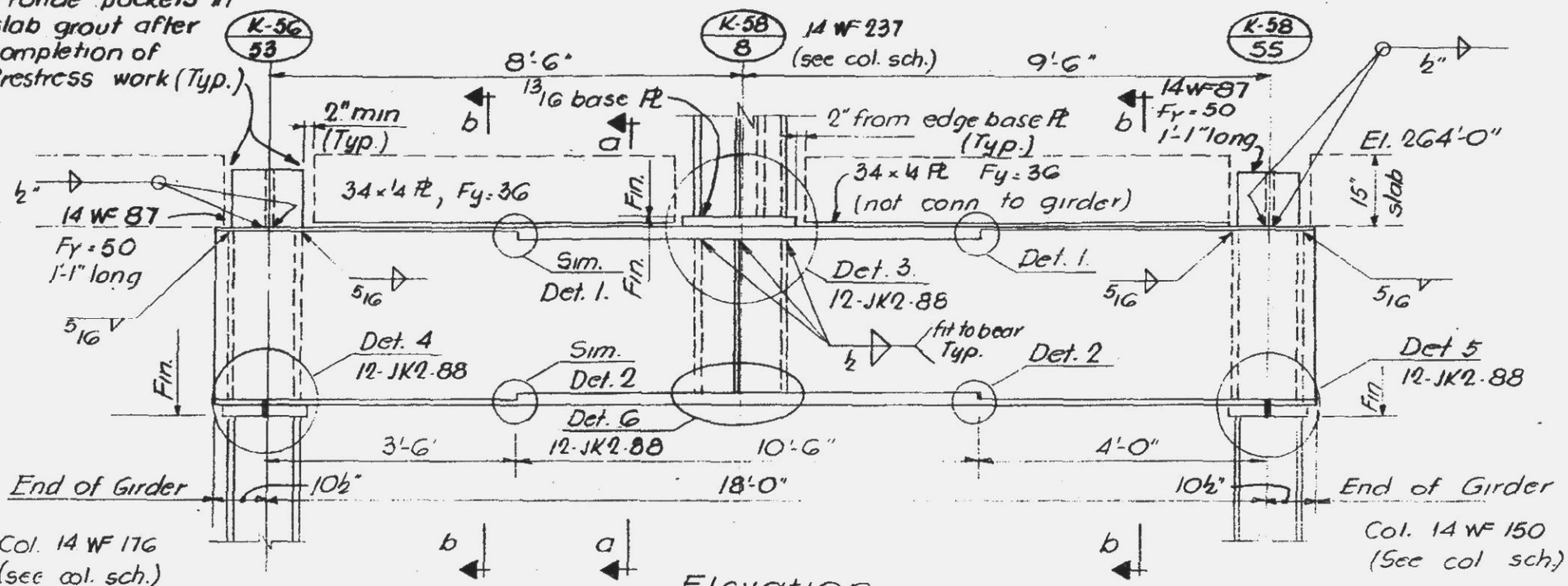

Elevation

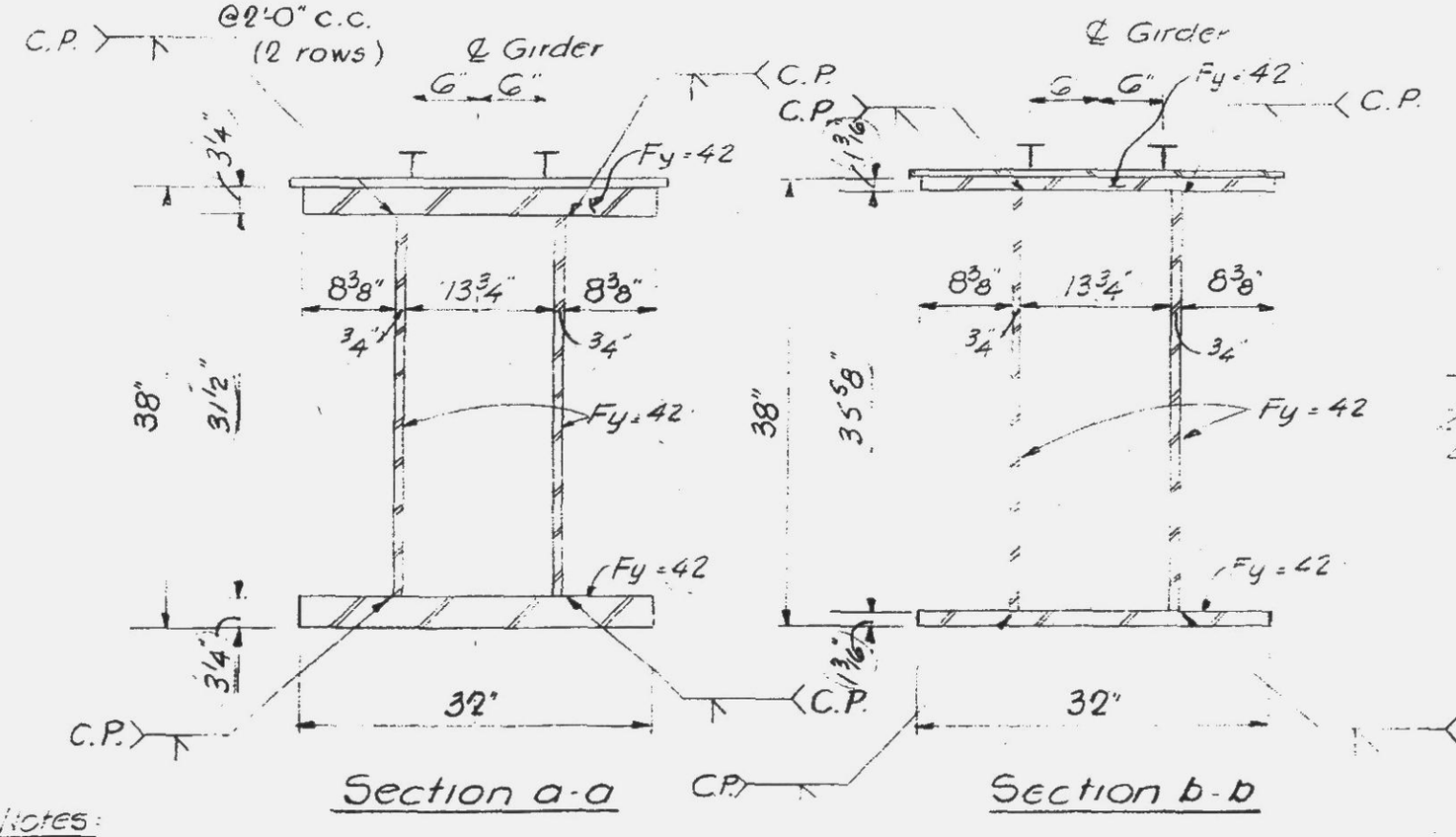

Section a-a Section b-b

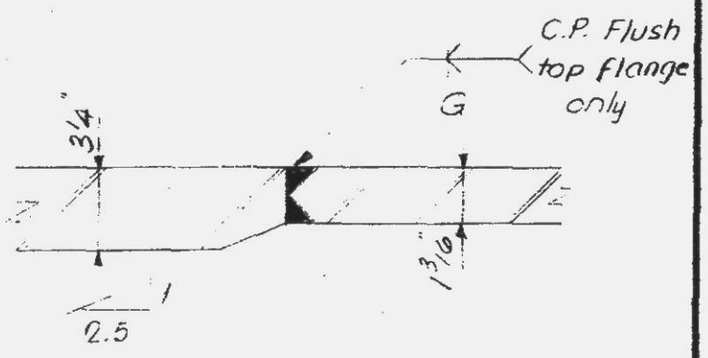

Detail 1 (as shown)
Detail 2 (reflected)

Notes:

1. All welds to be E 70 xx
2. All bolts to be A 325 friction type, unless noted
3. Col. cap Pl Detail similar to Detail 104 (10-JK2-7)

12-JK2-87

LICENSED PROFESSIONAL ENGINEER — LESLIE E. ROBERTSON — No. 34360 — STATE OF NEW YORK

SKILLING - HELLE - CHRISTIANSEN - ROBERTSON Structural & Civil Engineers

PROJECT THE WORLD TRADE CENTER | TITLE DETAIL OF PLATE GIRDER | DATE 6-11-68

REVISIONS
7-19-68

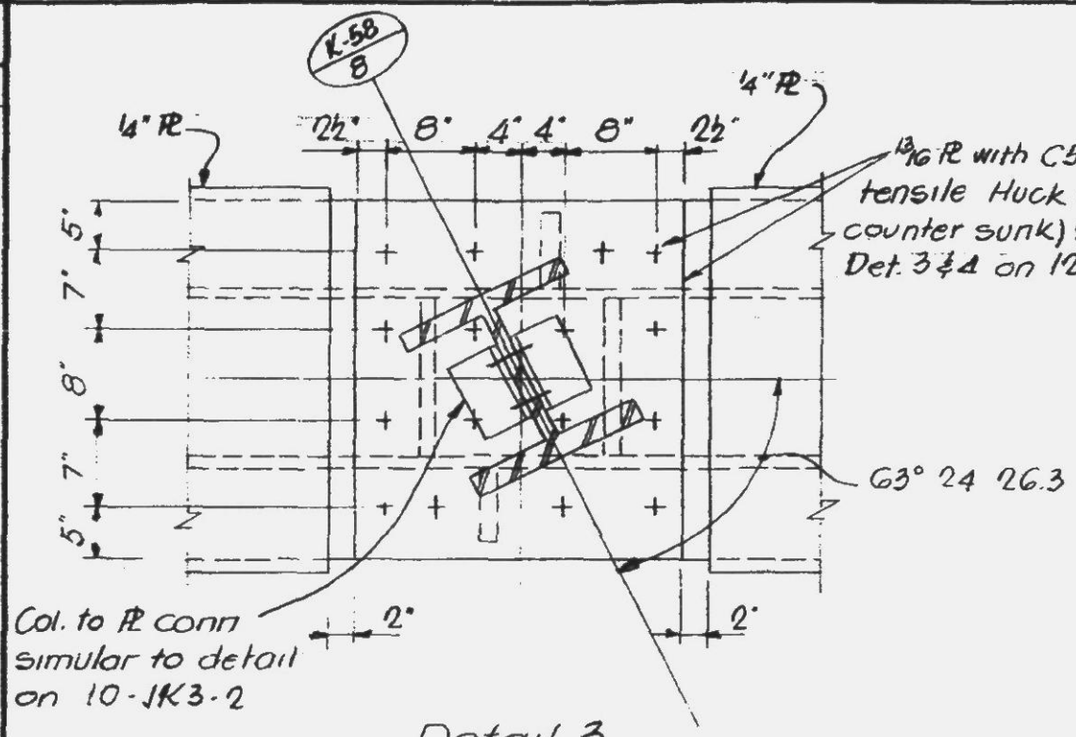

Detail 3

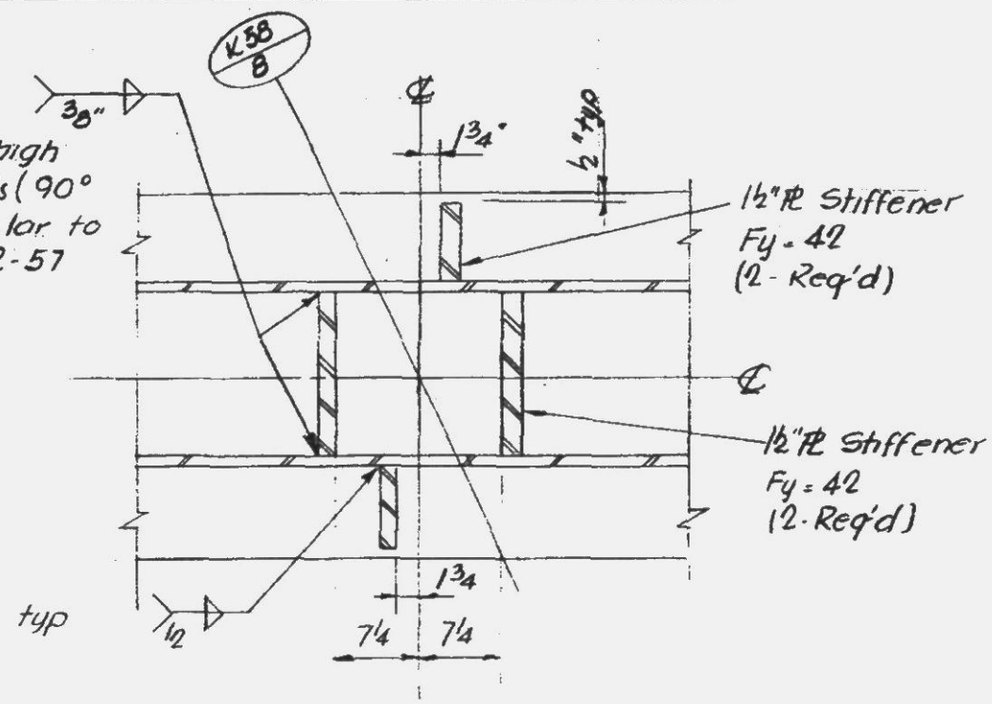

Detail 6

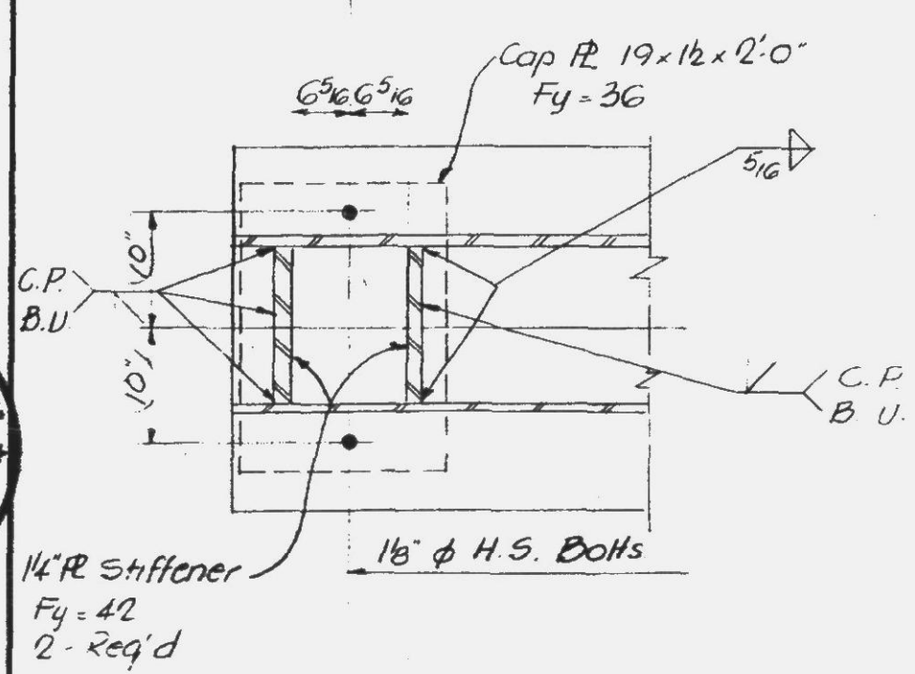

Detail 4 (as shown)
Detail 5 (opp hand)

Notes

1. All welds to be E 70 xx
2. All bolts to be A325 friction type, unless noted
3. Col. cap PL Det. similar to Det 104 (10-JK2-7)

LICENSED PROFESSIONAL ENGINEER
LESLIE E. ROBERTSON
No. 34360
UNIVERSITY OF THE STATE OF NEW YORK

12-JK2-88

SKILLING, HELLE, CHRISTIANSEN, ROBERTSON — Structural & Civil Engineers

PROJECT: THE WORLD TRADE CENTER | TITLE: DETAIL OF PLATE GIRDER | DATE: 6-11-68

REVISIONS
7-19-68
1-6-69

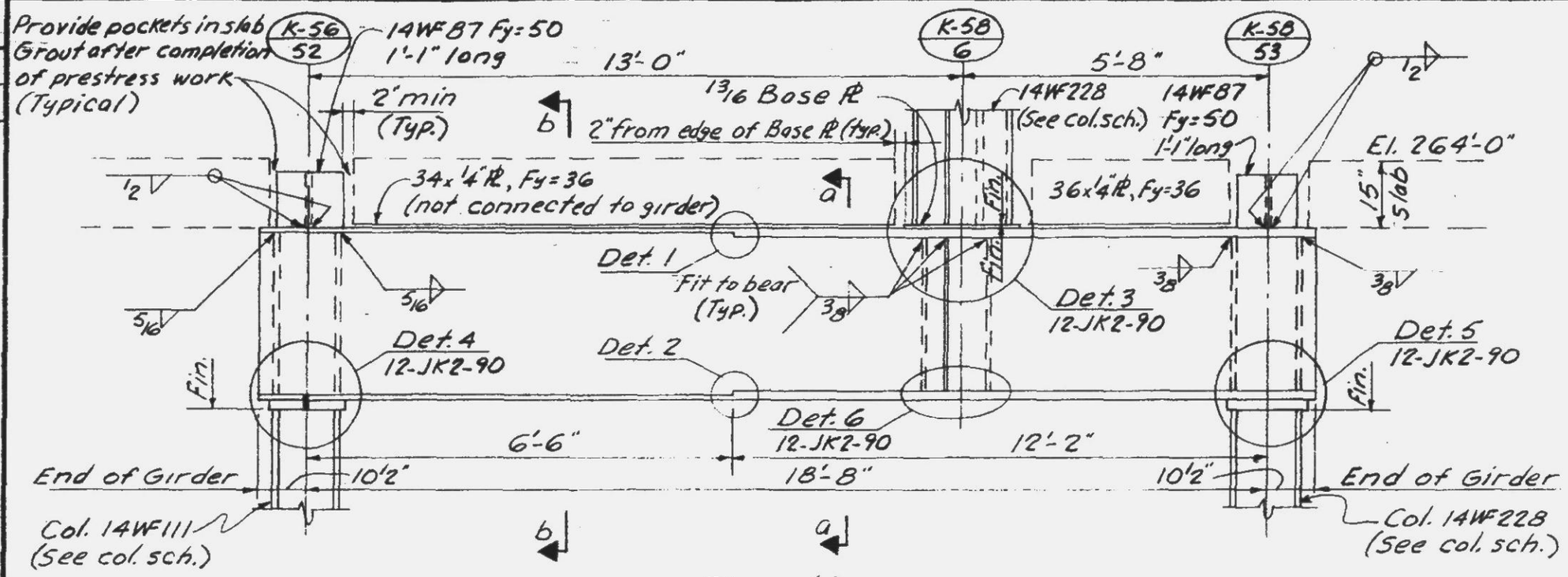

Elevation

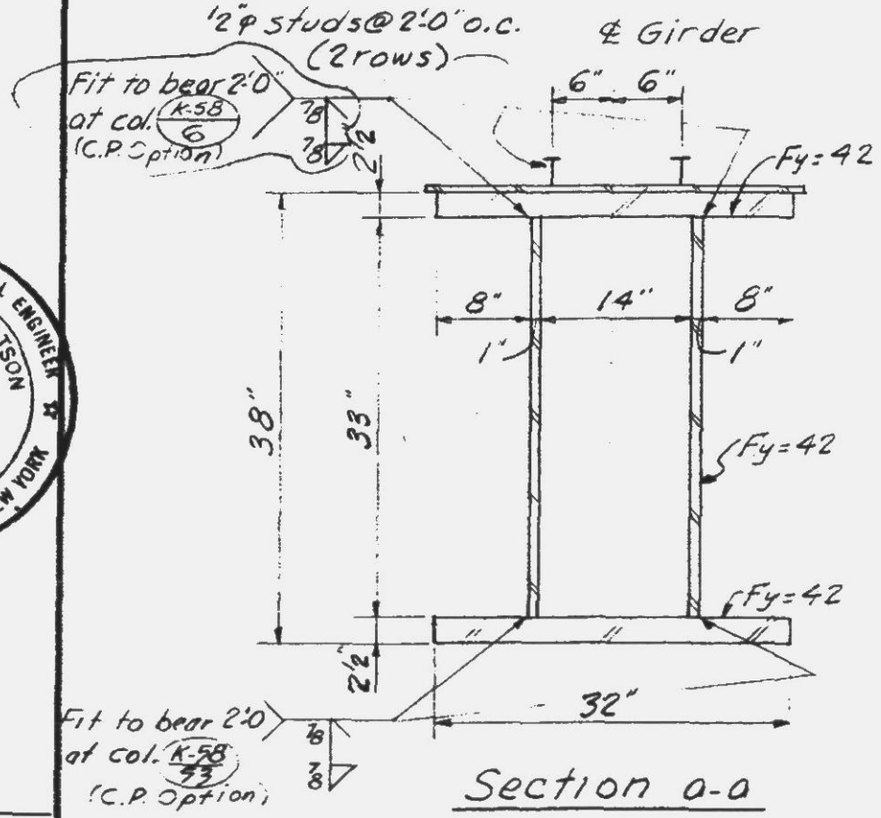

Section a-a

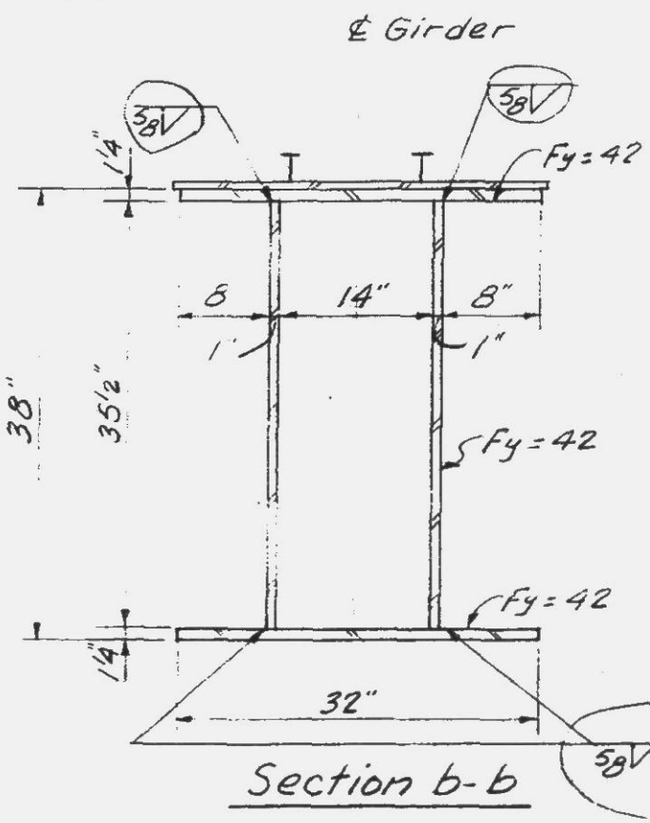

Section b-b

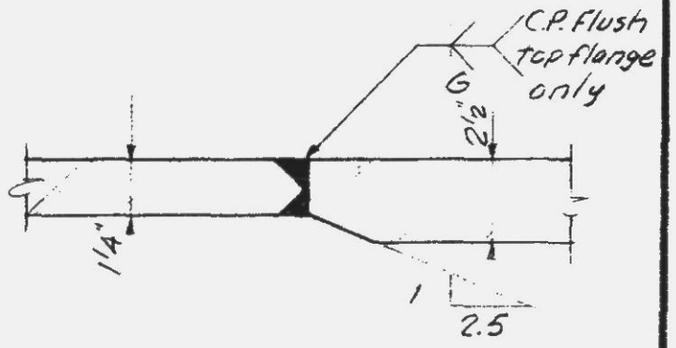

Detail 1 (as shown)
Detail 2 (reflected)

Notes:
1. All welds to be E 70 xx
2. All bolts to be A325 friction type, unless noted.
3. Col. cap Pl Detail similar to Detail 104 (10-JK2-7)

LICENSED PROFESSIONAL ENGINEER — LESLIE E. ROBERTSON — No. 34360 — UNIVERSITY OF THE STATE OF NEW YORK

DESIGNED
DRAWN A.F.
REVIEWED E.L.

12-JK2-89

SKILLING - HELLE - CHRISTIANSEN - ROBERTSON Structural & Civil Engineers

PROJECT THE WORLD TRADE CENTER | TITLE DETAIL OF PLATE GIRDER | DATE 6-11-68

REVISIONS

7-19-68

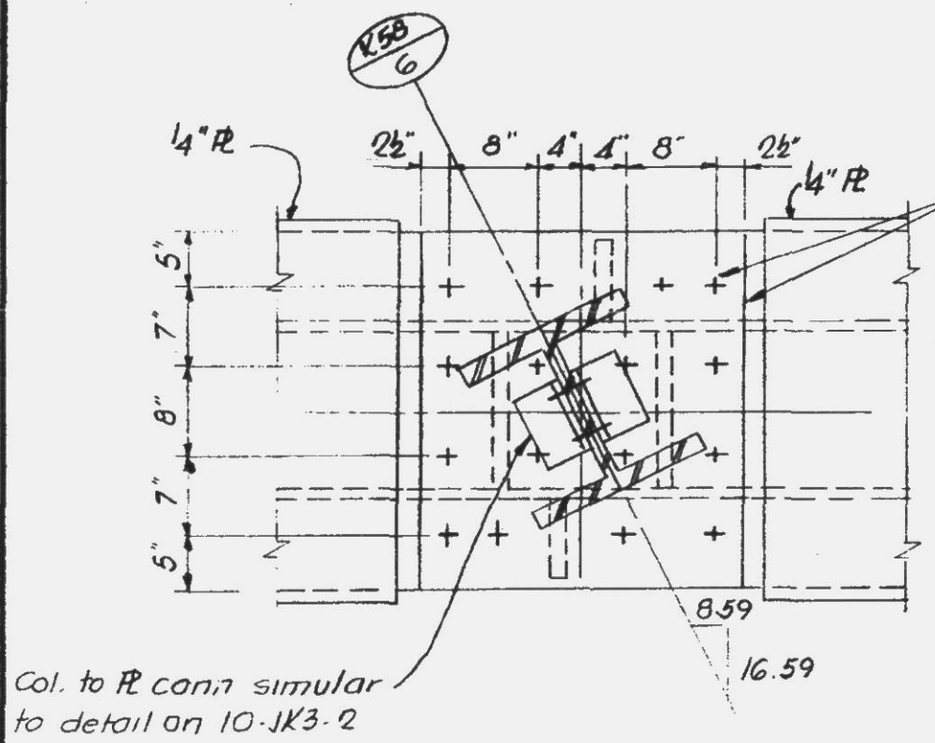

Detail 3

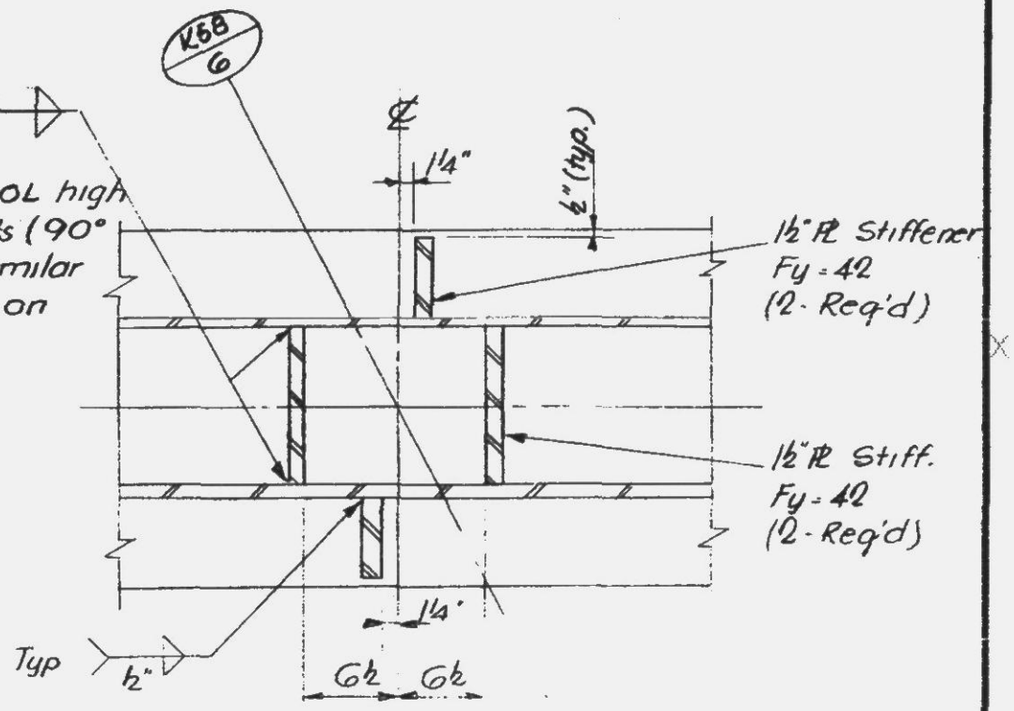

Detail 6

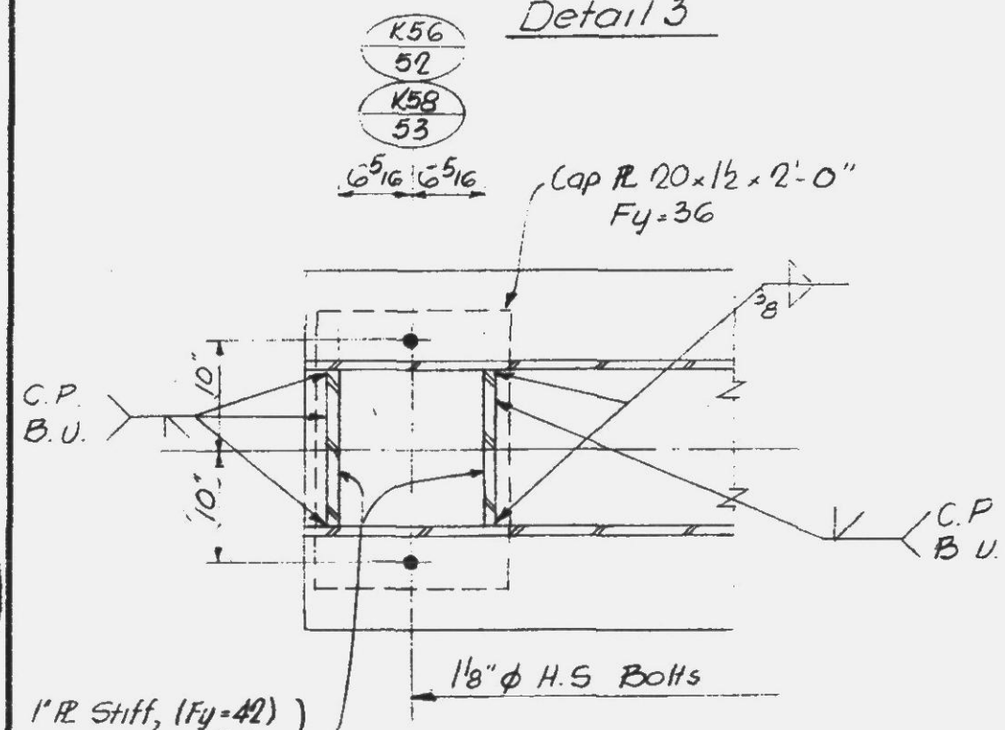

Detail 4 (as shown)
Detail 5 (opp hand)

Notes:

1. All welds to be E 70 xx
2. All bolts to be A 325 friction type, unless shown
3. Col. cap PL Det. similar to Det. 104 (10-JK2-7)

LICENSED PROFESSIONAL ENGINEER
LESLIE E. ROBERTSON
No. 34360
UNIVERSITY OF THE STATE OF NEW YORK

12-JK2-90

SKILLING - HELLE - CHRISTIANSEN - ROBERTSON — Structural & Civil Engineers

PROJECT: THE WORLD TRADE CENTER | TITLE: DETAIL OF PLATE GIRDER | DATE: 6-11-68

REVISIONS
7-19-68
1-6-69

Provide pockets in slab. Grout after completion of prestress work (Typ)

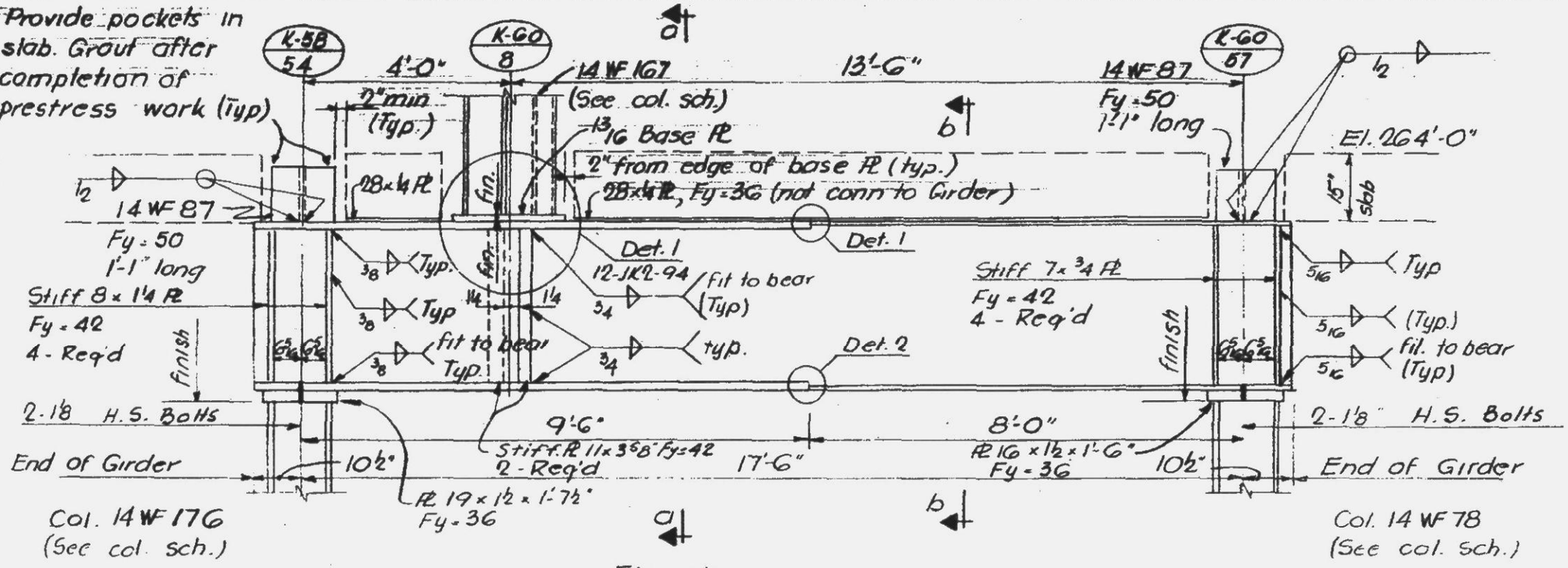

Elevation

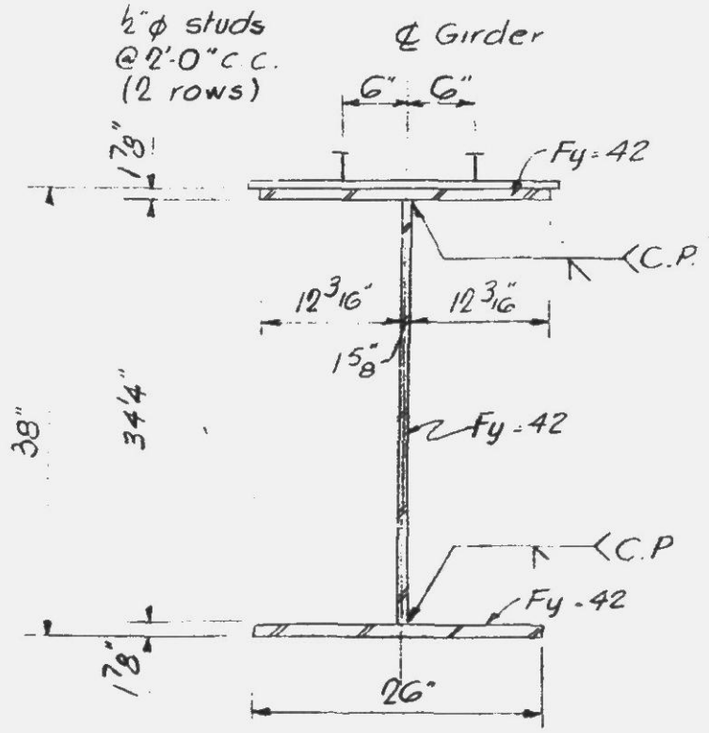

Section a-a

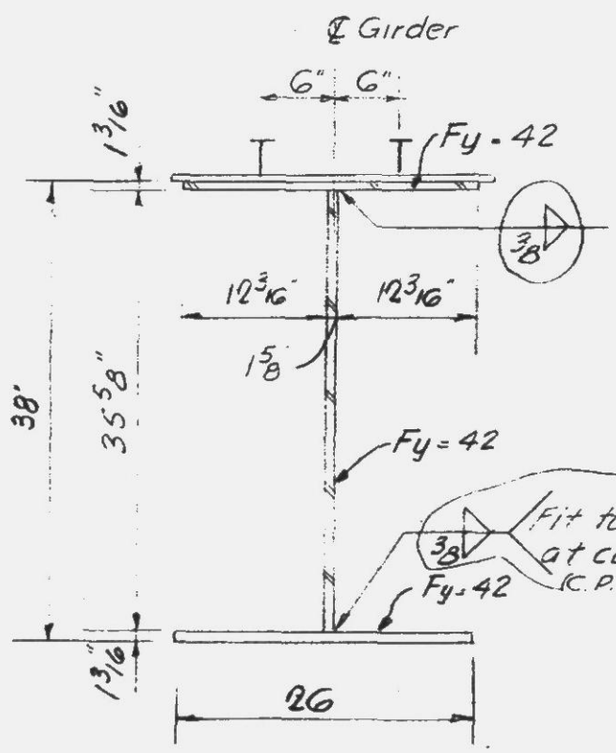

Section b-b

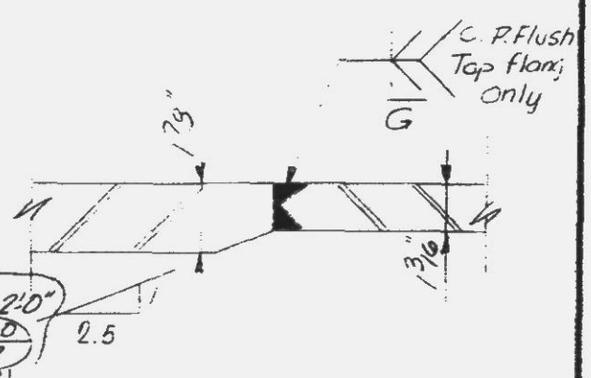

Detail 1 (as shown)
Detail 2 (reflected)

Notes:

1. All welds to be E 70 xx
2. All bolts to be A325 friction type, unless noted
3. Col cap Pl Detail similar to Detail 104 (10-JK2-7)

LICENSED PROFESSIONAL ENGINEER — LESLIE E. ROBERTSON — No. 34360 — UNIVERSITY OF THE STATE OF NEW YORK

DRAWN A.F.
REVIEWED E.L.

12-JK2-91

SKILLING - HELLE - CHRISTIANSEN - ROBERTSON — Structural & Civil Engineers

PROJECT: THE WORLD TRADE CENTER

TITLE: DETAIL OF PLATE DETAIL

DATE: 6-11-68

REVISIONS
- 7-19-68
- 9-4-68
- 1-6-69
- 2-19-69

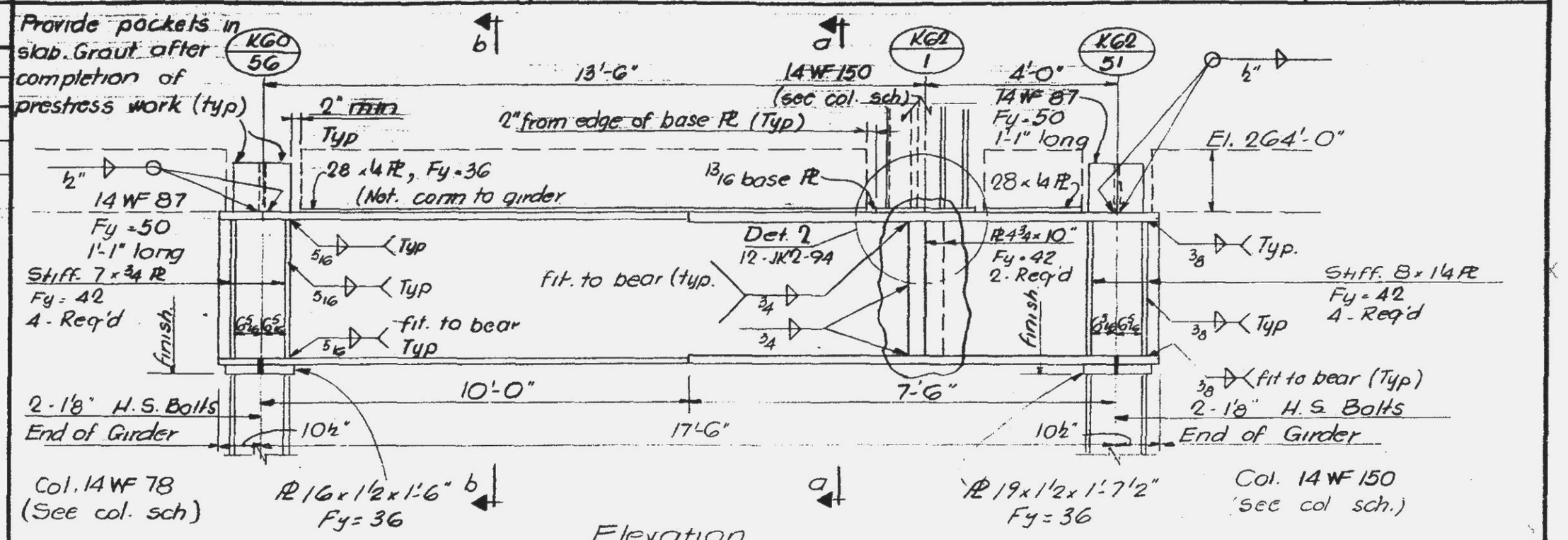

Elevation

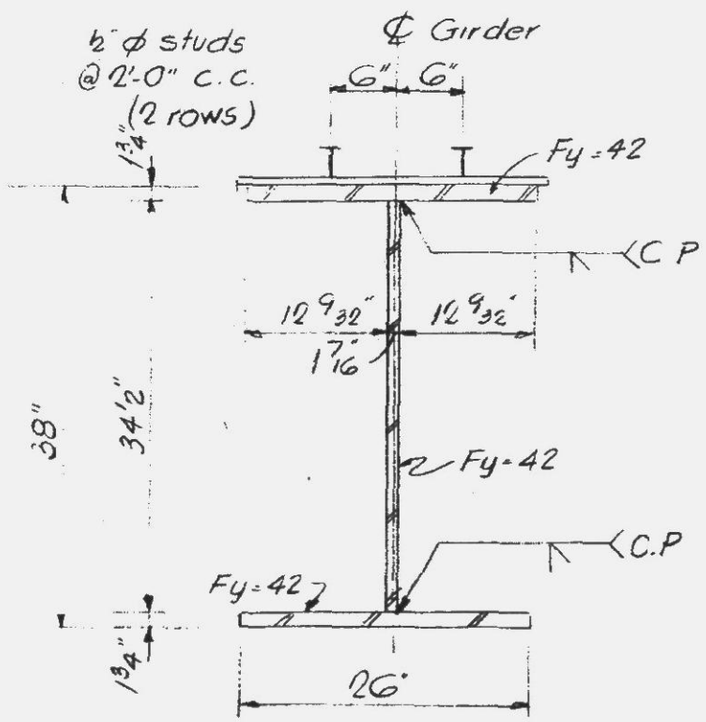

Section a-a

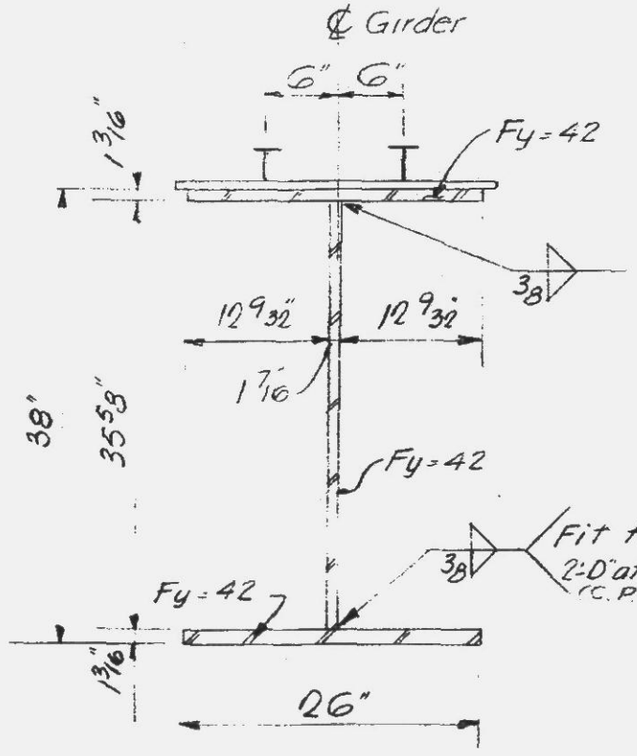

Section b-b

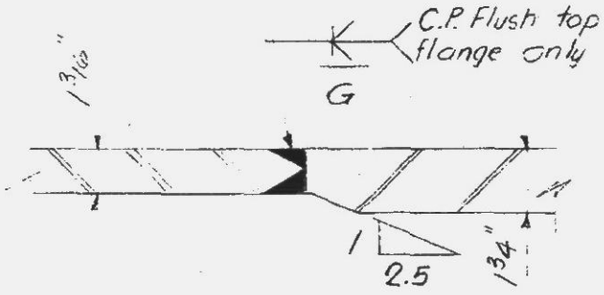

Detail 1 (as shown)
Detail 2 (reflected)

Notes:
1. All welds to be E 70 xx
2. All bolts to be A 325 friction type, unless noted
3. Col. cap Pl Detail similar to Detail 104 (10-JK2-7)

LICENSED PROFESSIONAL ENGINEER — LESLIE E. ROBERTSON — No. 34360 — UNIVERSITY OF THE STATE OF NEW YORK

DRAWN A.F.

REVIEWED E.L.

12-JK2-92

SKILLING - HELLE - CHRISTIANSEN - ROBERTSON Structural & Civil Engineers

PROJECT THE WORLD TRADE CENTER | TITLE DETAIL OF PLATE GIRDER | DATE 6-11-68

REVISIONS
7-19-68
9-4-68

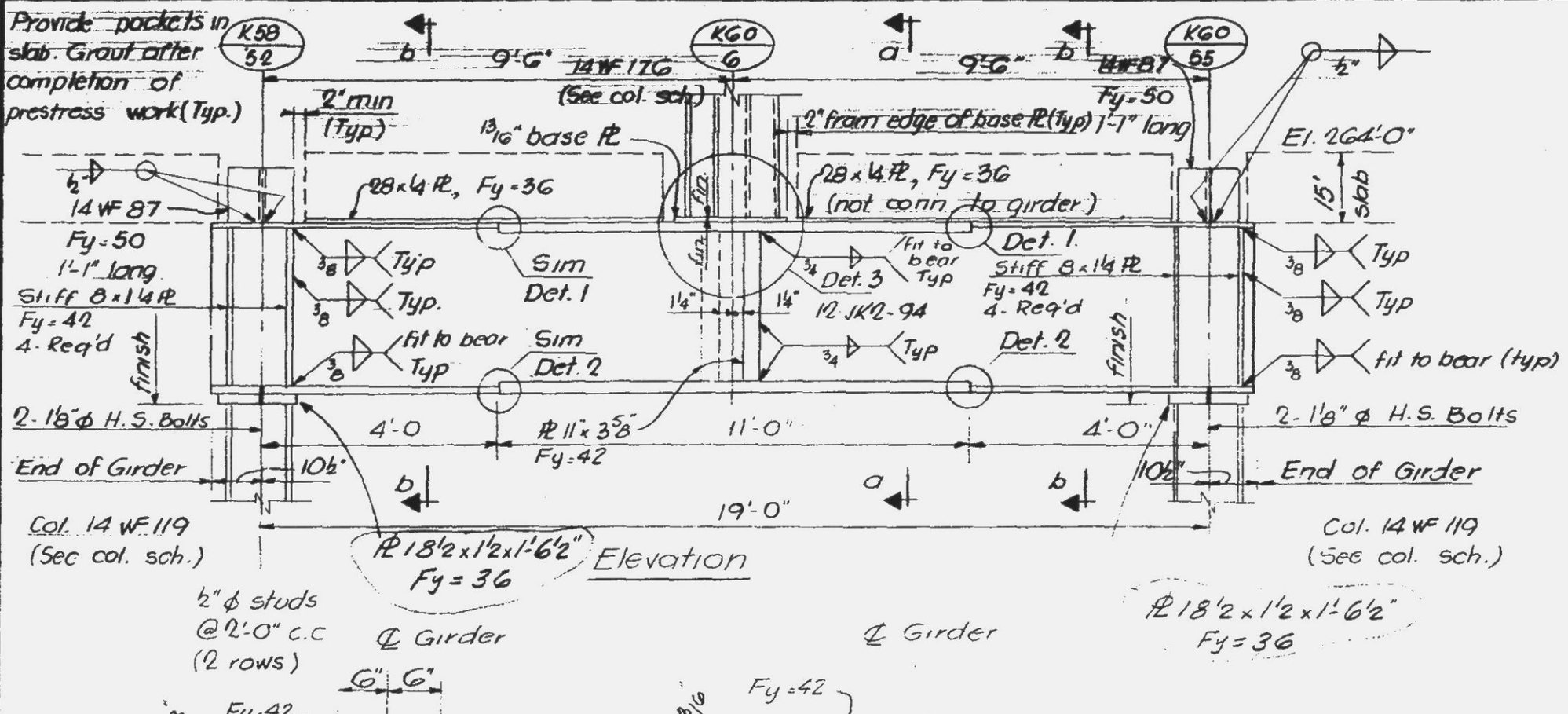

Notes:

1. All welds to be E 70 xx
2. All bolts to be A325 friction type, unless noted
3. Col. cap Pl Detail similar to Detail 104 (10-JK2-7)

12-JK2-93

LICENSED PROFESSIONAL ENGINEER
LESLIE E. ROBERTSON
No. 34360
UNIVERSITY OF THE STATE OF NEW YORK

SKILLING - HELLE - CHRISTIANSEN - ROBERTSON — Structural & Civil Engineers

PROJECT THE WORLD TRADE CENTER | TITLE DETAIL OF PLATE GIRDER | DATE 6-11-68

REVISIONS

7-19-68

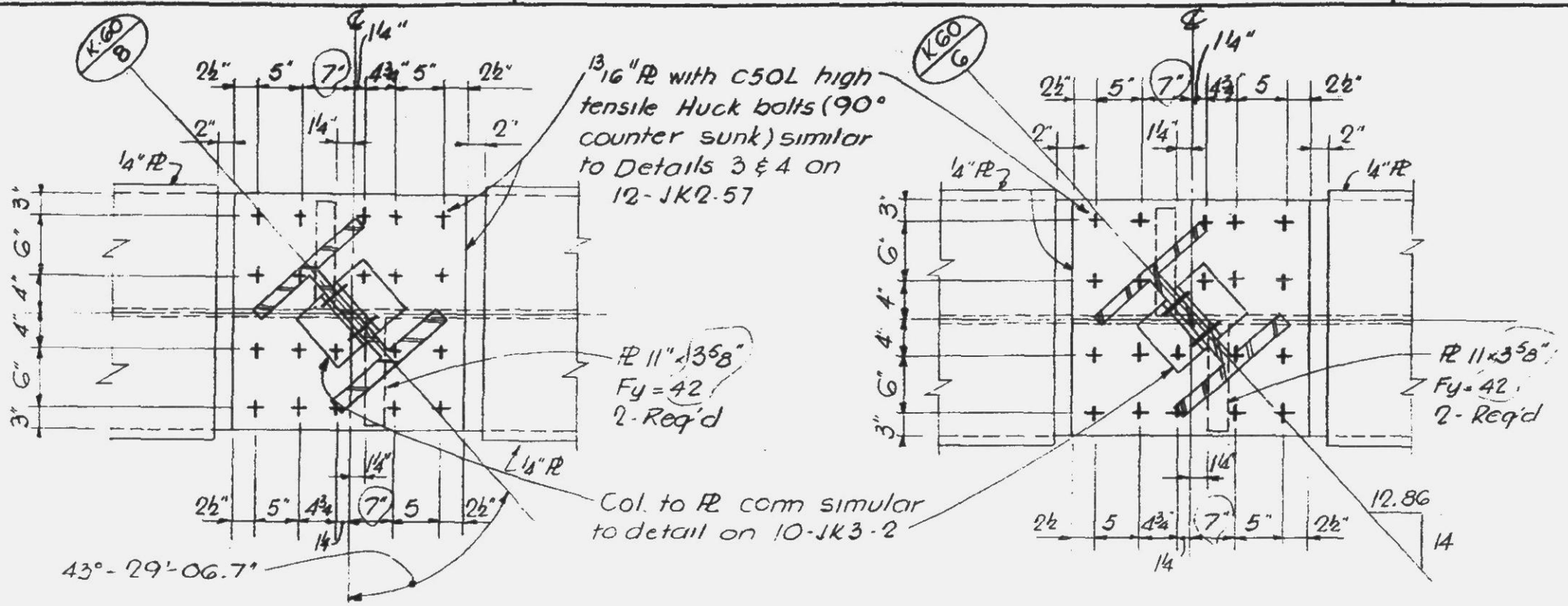

(For 12-JK2-91)

Detail 1

(For 12-JK2-93)

Detail 3

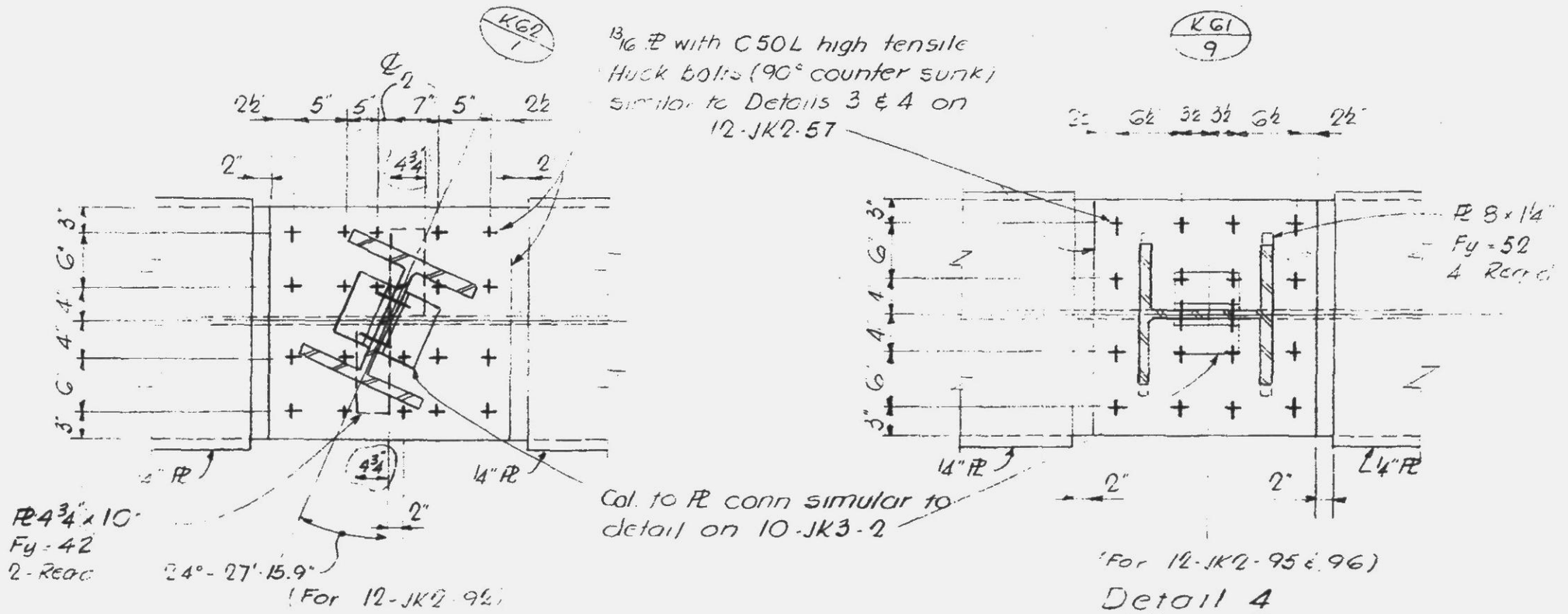

(For 12-JK2-94)

Detail 2

(For 12-JK2-95 & 96)

Detail 4

LICENSED PROFESSIONAL ENGINEER — LESLIE E. ROBERTSON — No. 34360 — UNIVERSITY OF THE STATE OF NEW YORK

12-JK2-94

SKILLING - HELLE - CHRISTIANSEN - ROBERTSON — Structural & Civil Engineers

PROJECT: THE HORIZON TRADE CENTER — TITLE: DETAIL OF PLATE GIRDER — DATE: 6-11-68

REVISIONS
7-19-68
9-4-68
1-6-69

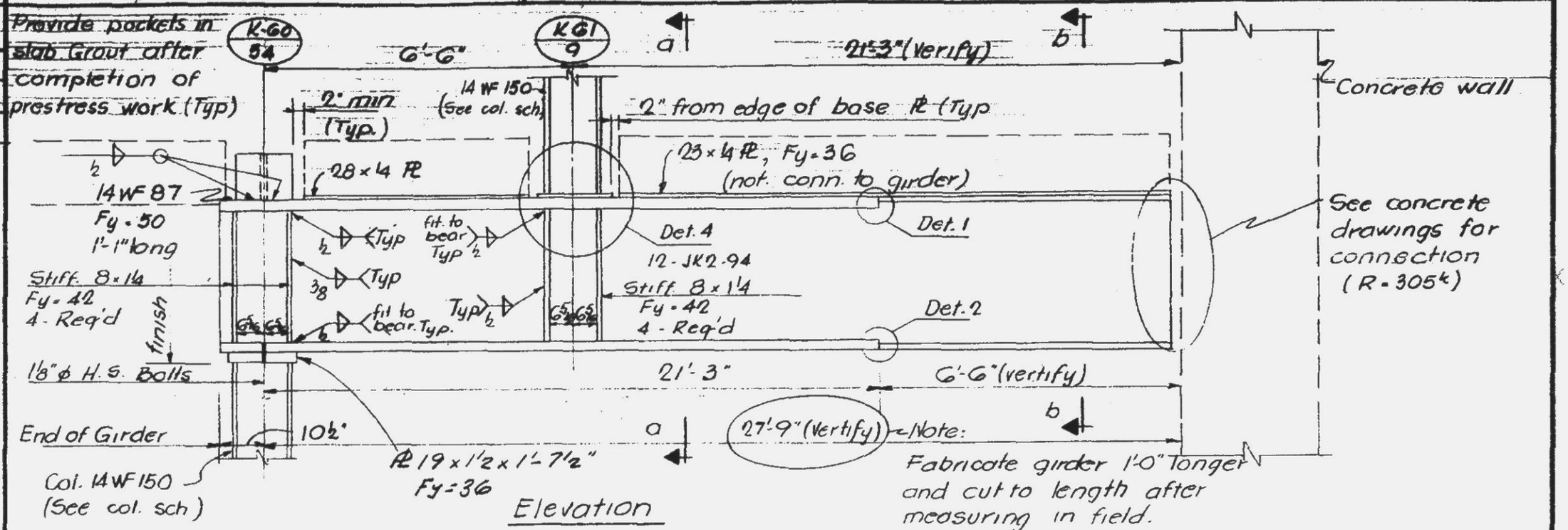

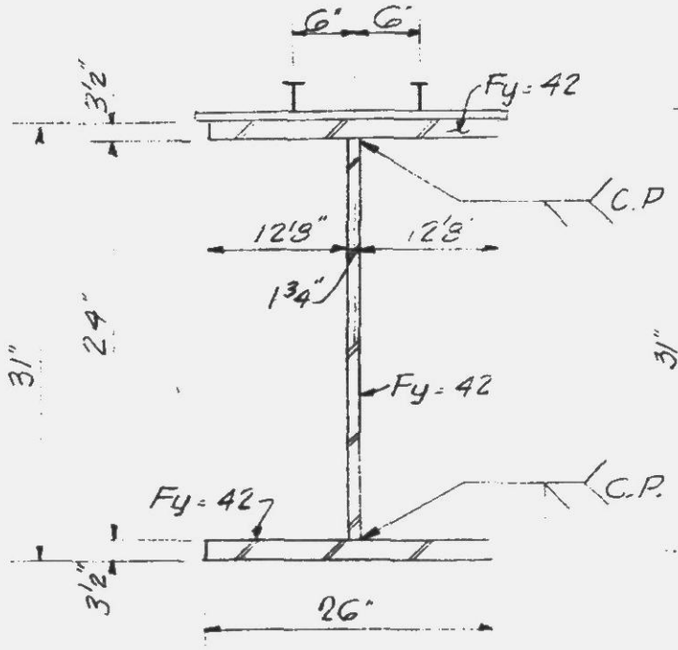

Section a-a

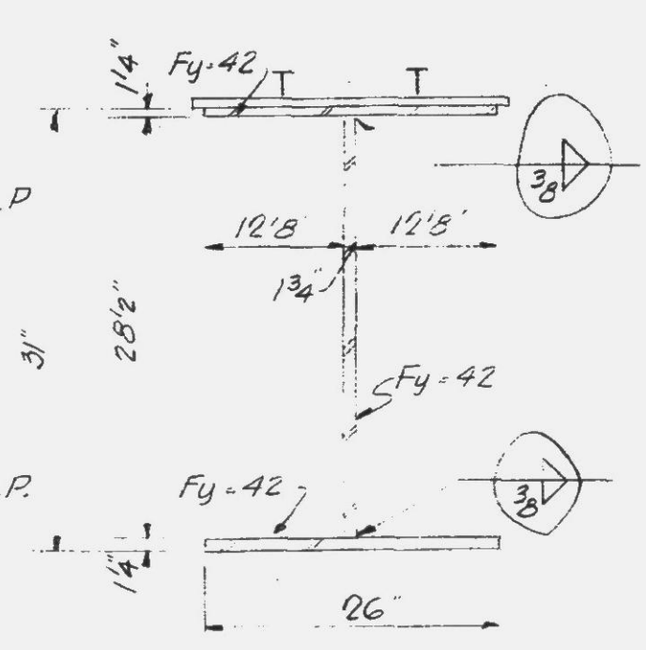

Section b-b

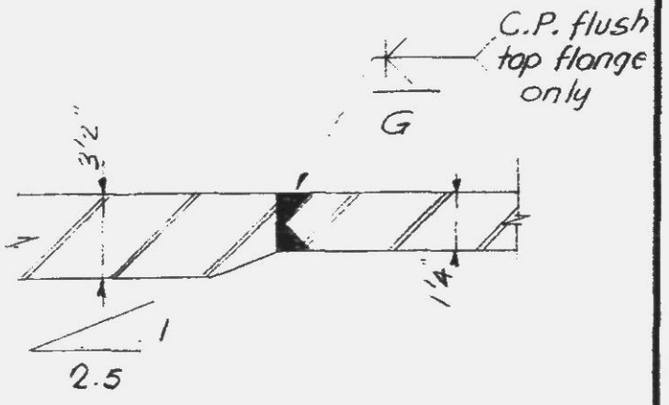

Detail 1 (as shown)
Detail 2 (reflected)

LICENSED PROFESSIONAL ENGINEER — LESLIE E. ROBERTSON — No. 34360 — UNIVERSITY OF THE STATE OF NEW YORK

DRAWN A.F.
REVIEWED E.L.

Notes:
1. All welds to be E 70 x x
2. All bolts to be A 325 friction type, unless shown
3 Col. cap Pl Detail similar to Detail 104 (10-JK2-7)

12-JK2-95

SKILLING - HELLE - CHRISTIANSEN - ROBERTSON — Structural & Civil Engineers

PROJECT: [illegible] TRADE CENTER — TITLE: [illegible] — DATE: 6-11-68

REVISIONS
7-19-68
9-4-68
10-15-68
1-6-69

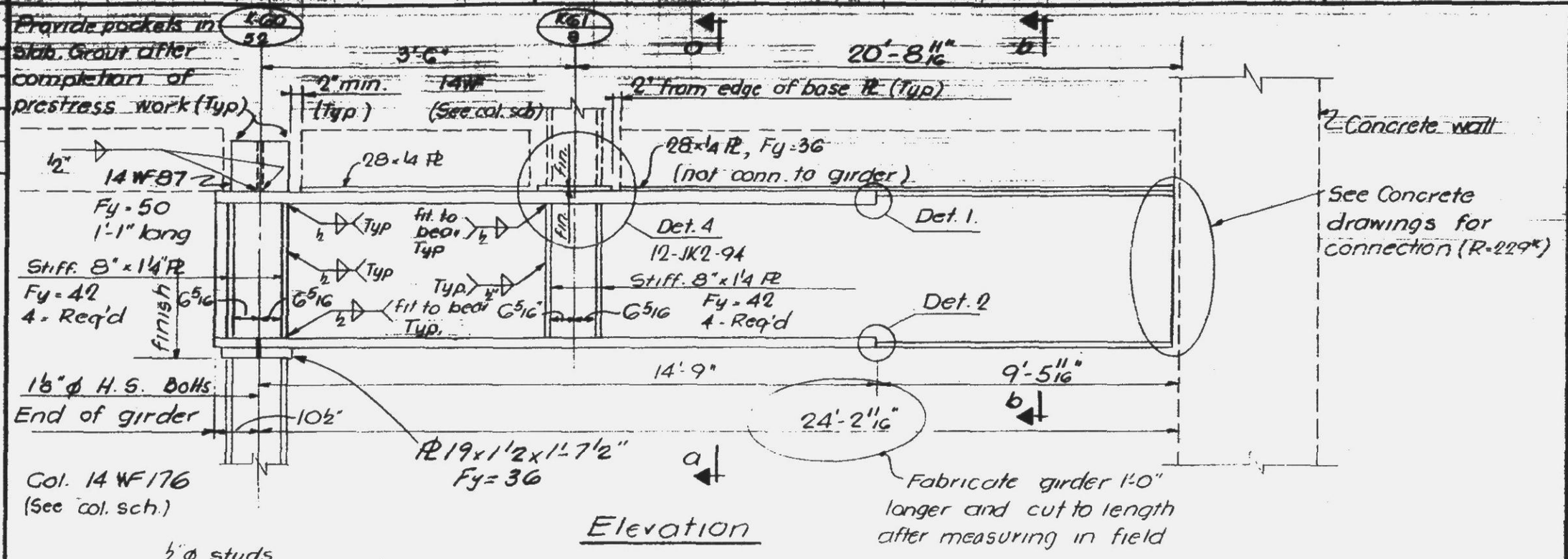

Elevation

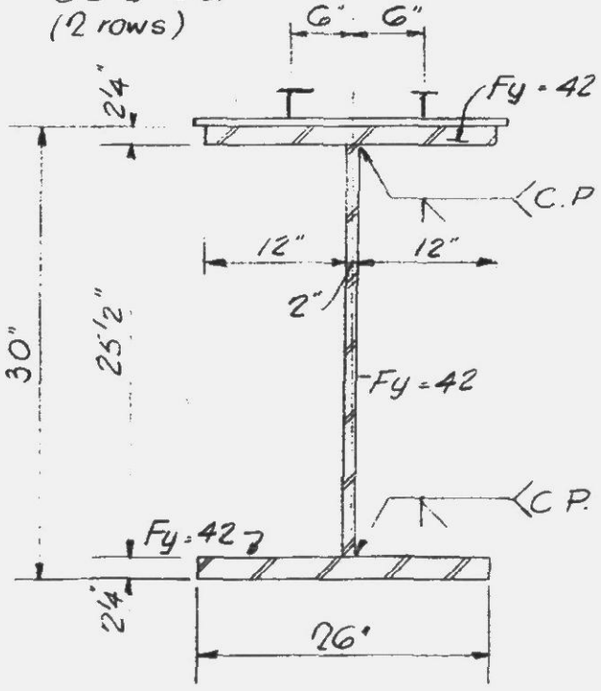

Section a-a

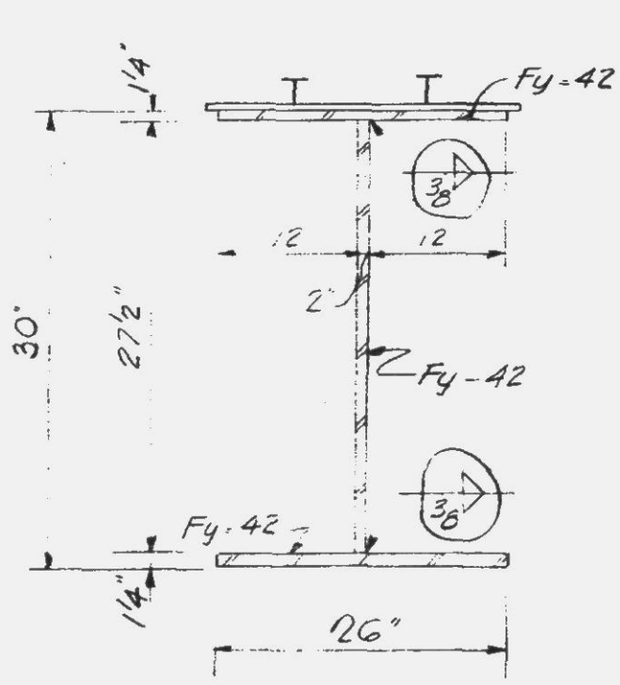

Section b-b

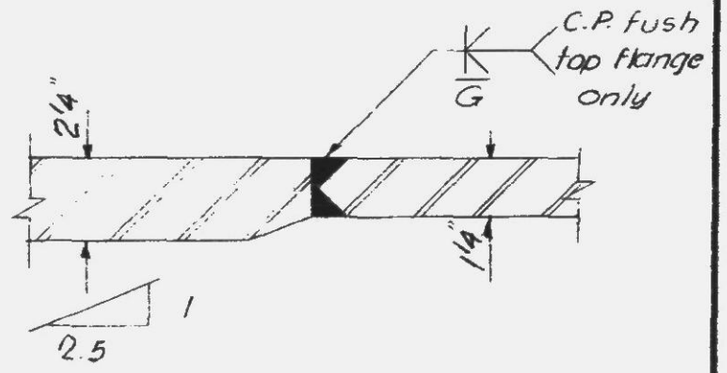

Detail 1 (as shown)
Detail 2 (reflected)

Notes:

1. All welds to be E 70 xx
2. All bolts to be A325 friction type, unless shown
3. Col cap PL Det. similar to Det 104 (10-JK2-7)

LICENSED PROFESSIONAL ENGINEER — LESLIE E. ROBERTSON — No. 34360 — UNIVERSITY OF THE STATE OF NEW YORK

DRAWN A.F.
REVIEWED E.L.

12-JK2-96

SKILLING · HELLE · CHRISTIANSEN · ROBERTSON — Structural & Civil Engineers

PROJECT THE WORLD TRADE CENTER | TITLE DETAIL OF PLATE GIRDER | DATE 6-11-68

SIONS

7-19-68

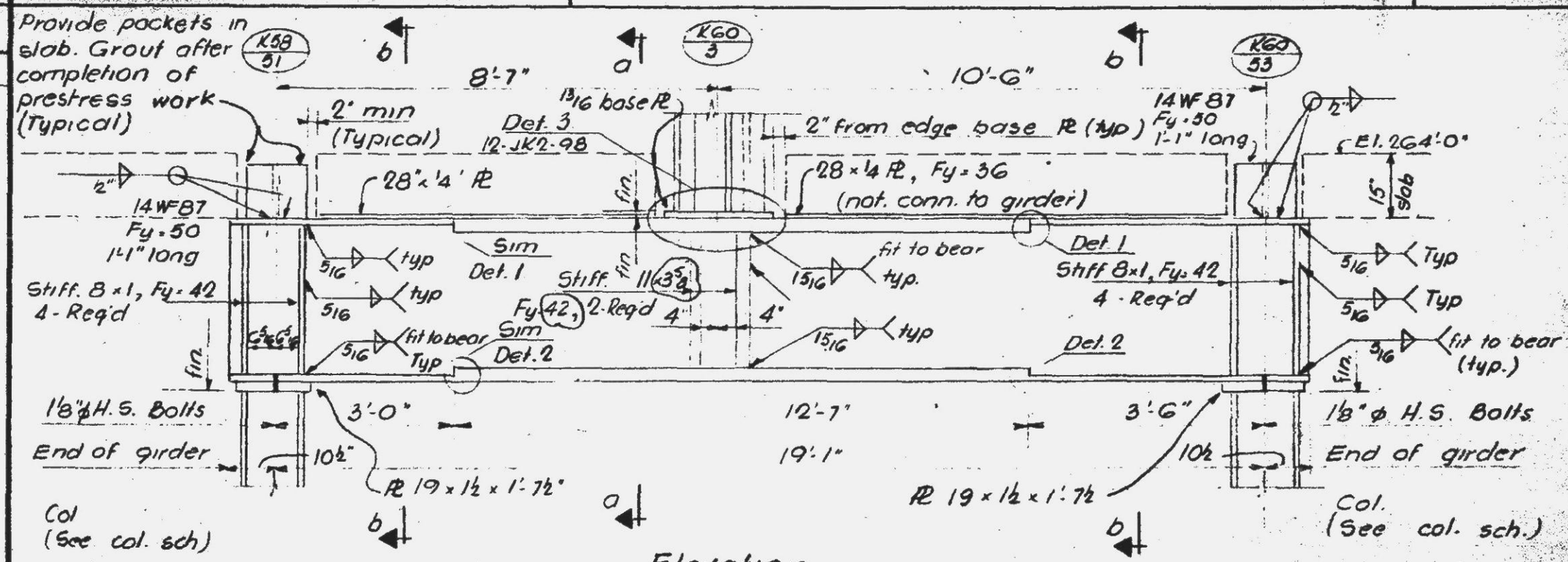

Notes

1. All welds to be E 70 xx
2. All bolts to be A 325 friction type, unless noted
3. Col. cap ℗ Detail similar to Detail 104 (10-JK2-7)

12-JK2-97

LEONARD E. ROBERTSON PROFESSIONAL ENGINEER No. 34360 STATE OF NEW YORK

SKILLING - HELLE - CHRISTIANSEN - ROBERTSON Structural & Civil Engineers

PROJECT THE WORLD TRADE CENTER | TITLE DETAIL OF PLATE GIRDER | DATE 6-11-68

REVISIONS

7-19-68

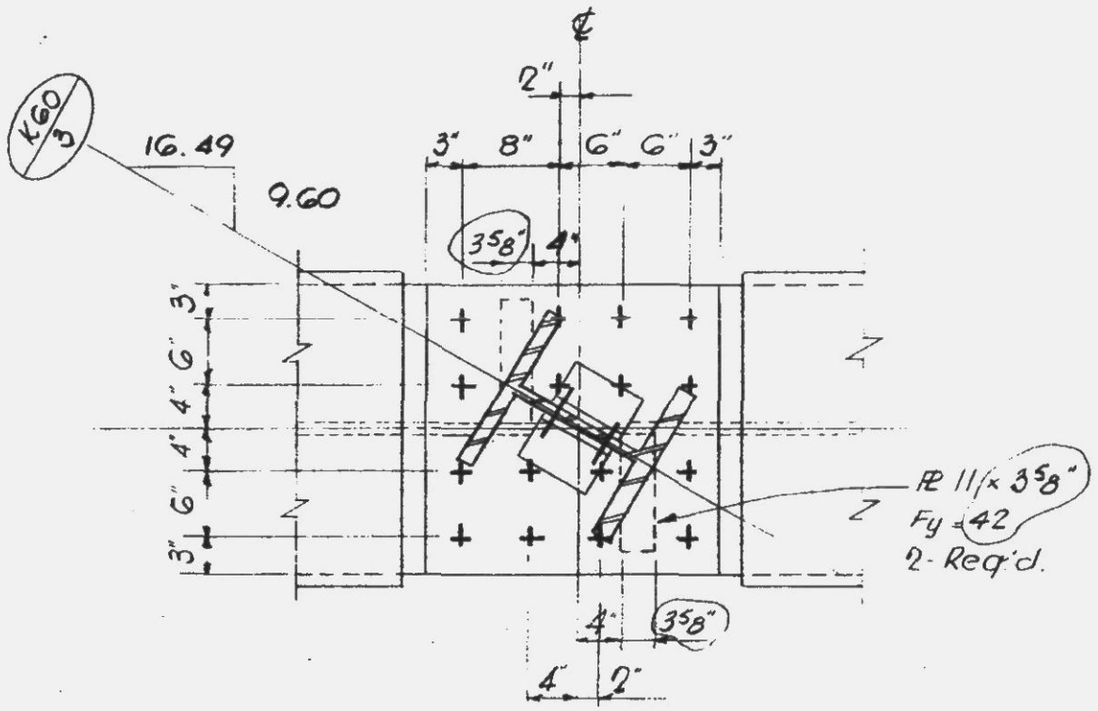

Detail 3

LICENSED PROFESSIONAL ENGINEER
LESLIE E. ROBERTSON
No. 34360
UNIVERSITY OF THE STATE OF NEW YORK

12-JK2 98

SKILLING, HELLE, CHRISTIANSEN, ROBERTSON — Structural & Civil Engineers

PROJECT THE WORLD TRADE CENTER | TITLE GIRDER DETAILS | DATE 4-18-69

REVISIONS

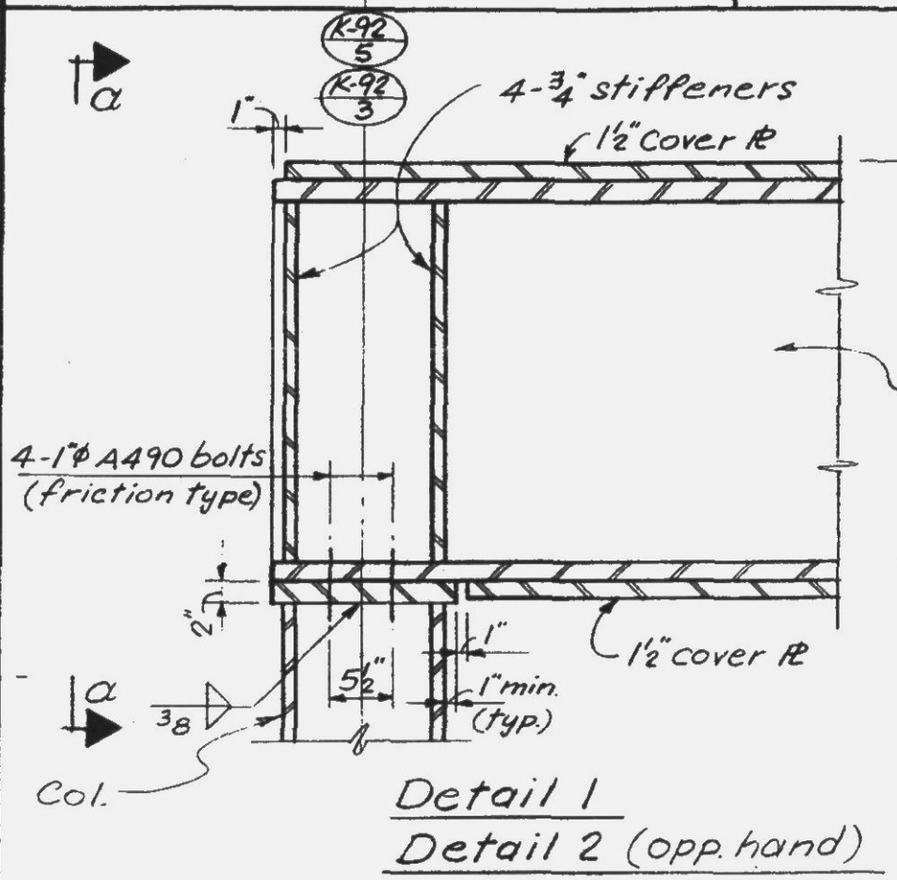

Detail 1

Detail 2 (opp. hand)

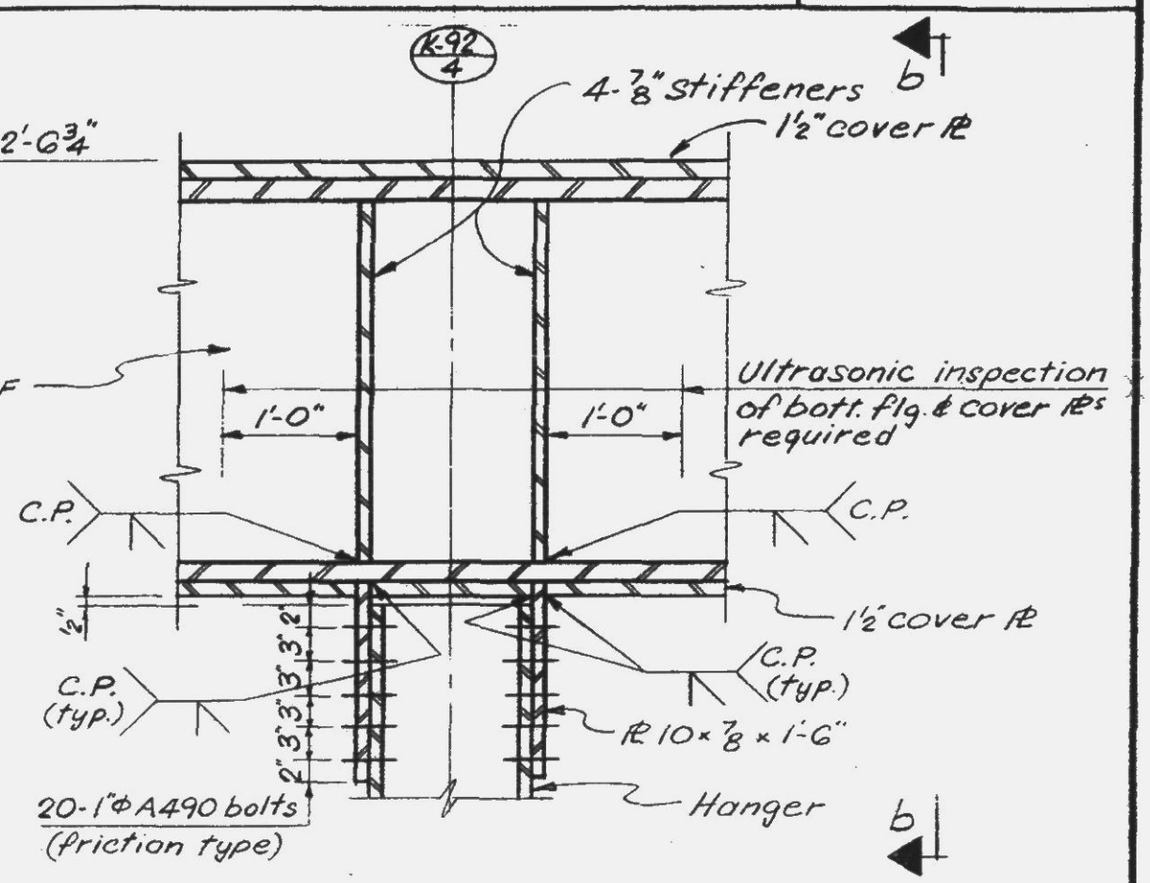

Detail 3

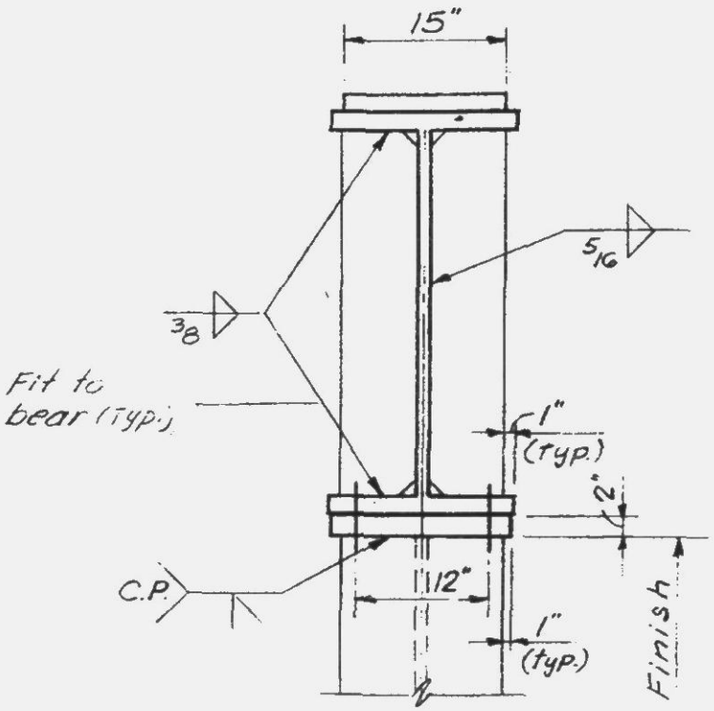

Section a-a

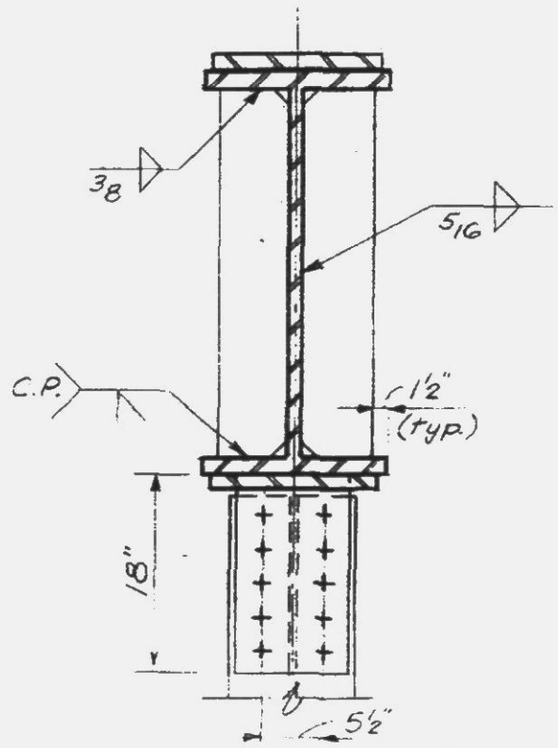

Section b-b

LICENSED PROFESSIONAL ENGINEER
LESLIE E. ROBERTSON
No. 34360
UNIVERSITY OF THE STATE OF NEW YORK

DESIGNED

DRAWN S.C.

REVIEWED E.L.

12-JK2-99

SKILLING – HELLE – CHRISTIANSEN – ROBERTSON — STRUCTURAL & CIVIL ENGINEERS

PROJECT: THE WORLD TRADE CENTER | TITLE: PLATE GIRDER SCHEDULE | DATE: 5-1-68

REVISIONS
6-28-68
7-19-68
11-5-68
1-8-69

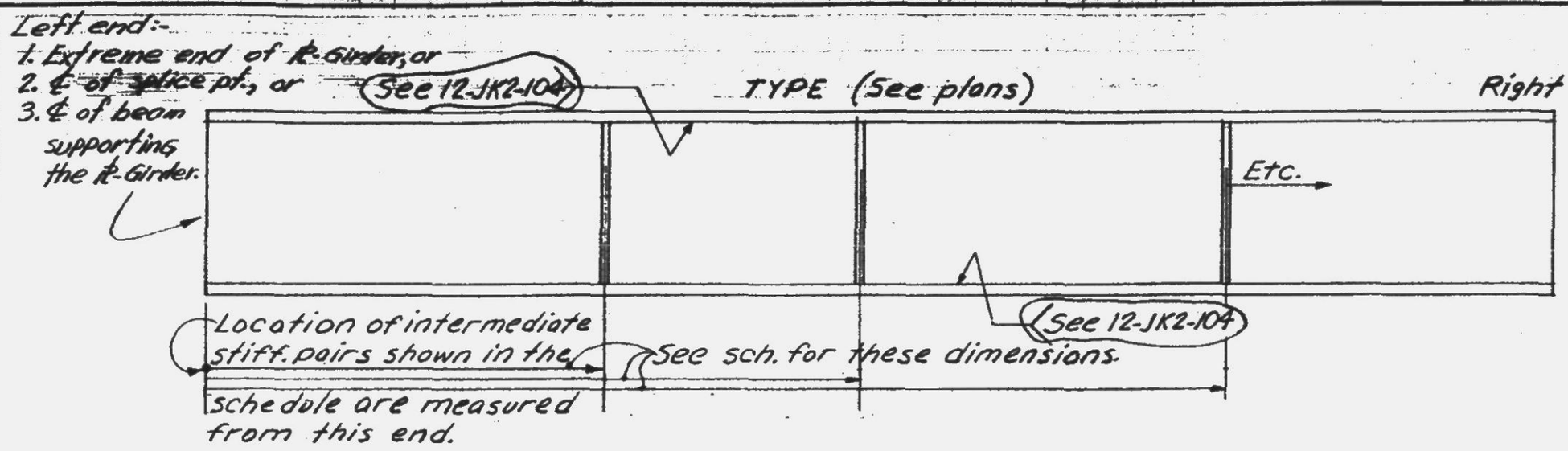

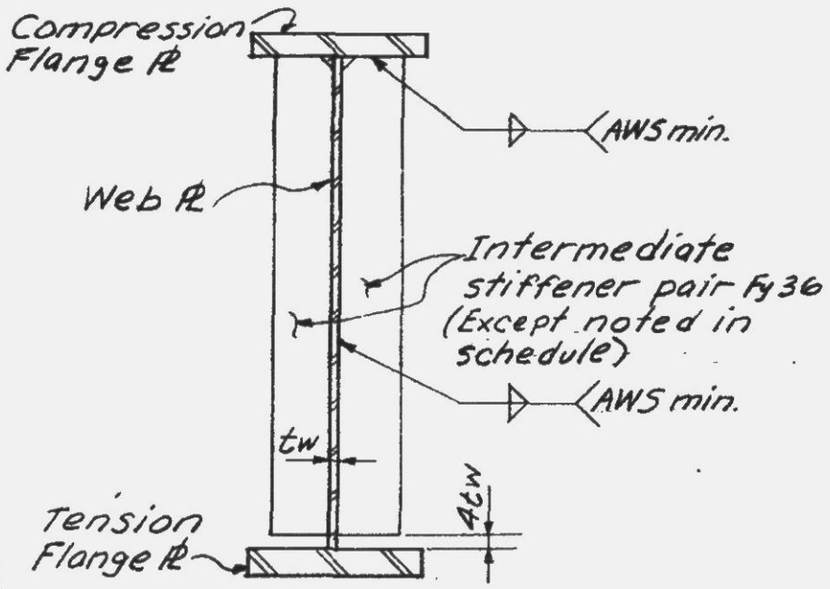

Typical Section

NOTES:

1. See 12-JK2-111 and 12-JK2-112 for typical connection details of beams framing to the girder.
2. Connection detail numbers at the base of columns supported by girders are shown on the plans.
3. Bearing stiffeners are shown on the Girder Connection Details and Column Connection Details.
4. Typical information shown on sketches may be altered by the "Remarks" column.

TYPE	Flange ℄s		Web ℄		Intermediate stiffener pairs		Left conn. Det.	Right conn. Det.	Remarks
	Size	Fy	Size	Fy	Size, ea.	Location			
J2A	30"x3"	42	50"x 7/8"	42	6"x 3/8" Fy=42	14', 86', 206' 446', 566' 666"	12-JK2-118	12-JK2-114	
J2B	28"x3	42	50"x 3/4"	42	6"x 3/8" Fy=42	45', 90', 180', 540', 630', 675"	12-JK2-115	12-JK2-116	
					10"x 5/8" Fy=42	360"			

DRAWN A.F.
REVIEWED E.L.

12-JK2-100

SKILLING - HELLE - CHRISTIANSEN - ROBERTSON Structural & Civil Engineers

PROJECT THE WORLD TRADE CENTER | TITLE PLATE GIRDER SCHEDULE (CONTINUED) | DATE 5-1-68

REVISIONS
7-19-68
9-4-68
10-15-68

TYPE	Flange Pls		Web Pl		Intermediate Stiffener pairs		Left Conn. Det.	Right Conn. Det.	Remarks
	Size	Fy	Size	Fy	Size, ea.	Location			
J2C	44"x5"	42	52"x1 7/8"	42	none	—	12-JK2-117	12-JK2-118	
J2D	34"x5"	42	52"x1 3/8"	42	none	—	12-JK2-115	12-JK2-119	
J4A	44"x5"	42	52"x1 7/8"	42	none	—	12-JK2-120	12-JK2-117	
J4B	40"x3"	42	56"x1 5/8"	42	none	—	12-JK2-121	12-JK2-122	
J4C	32"x3"	42	48"x 5/8"	42	6"x 3/8" Fy=42	63", 113", 163", 243", 339", 435", 535", 615"	12-JK2-123	12-JK2-124	
J4D		42							See 12-JK2-105
J4E	22"x3"	42	48"x1 1/4"	42	none	—	12-JK2-127	12-JK2-113 (Type B with A490 bolts)	
J4F	34"x2 1/2"	42	49"x1 5/8"	42	none	—	12-JK2-128	12-JK2-113 (Type C with A490 bolts)	
J4G	34"x2 1/2"	42	49"x1 5/8"	42	none	—	12-JK2-129	12-JK2-128 (Opp. hand)	
J4H	24"x2 1/2"	42	51"x 7/8"	42	none	—	12-JK2-157	12-JK2-113 (Type D with A490 bolts)	
J4I	24"x2 1/2"	42	51"x 7/8"	42	none	—	12-JK2-129	12-JK2-128 (Opp. Hand)	
J4J	22"x2"	42	52"x 3/4"	42	6"x 3/8" Fy=42 10"x 5/8" Fy=42	90", 375" 204", 261"	12-JK2-133	12-JK2-129	"A"
J4K	22"x2"	42	52"x 3/4"	42	6"x 3/8" Fy=42 10"x 5/8" Fy=42	18", 360", 470" 132", 250", 408"	12-JK2-113 (Type E with A490 bolts)	12-JK2-113 (Type F with A490 bolts)	
J4L	22"x2"	42	52"x 3/4"	42	6"x 3/8" Fy=42 10"x 5/8 Fy=42	14", 40", 112", 187" 298"	12-JK2-129	12-JK2-128 (Opp. hand)	"A"
J6A	24"x2"	36	52"x 3/4"	36	6"x 3/8" 10"x 5/8"	75", 303", 417" 132", 189"	12-JK2-128	12-JK2-129	"A"
J6B	20"x2 3/4"	36	50 1/2"x 3/4"	36	6"x 3/8" 10"x 5/8"	250", 470" 18", 132", 408"	12-JK2-113 (Type E)	12-JK2-113 (Type H)	
J6C	20"x2 3/4"	36	50 1/2"x 3/4"	36	6"x 3/8" 10"x 5/8"	14", 42", 114" 189", 300"	12-JK2-129	12-JK2-134	"A"
J6D	22"x2"	36	52"x 1/2"	36	6"x 3/8" 10"x 5/8"	126", 183", 297", 326", 395", 436" 69", 240"	12-JK2-128	12-JK2-129	"A"
J6E	22"x2"	36	52"x 1/2"	36	6"x 3/8" 10"x 5/8"	18", 75", 132", 415", 470" 250", 360"	12-JK2-113 (Type G)	12-JK2-113 (Type G)	
J6F	22"x2"	36	52"x 1/2"	36	6"x 3/8" 10"x 5/8"	14", 55", 151", 318" 207"	12-JK2-129	12-JK2-130	"A"
J6G	26"x2"	36	52"x 3/4"	36	6"x 3/8" 10"x 5/8"	75", 189", 303", 401", 442" 246"	12-JK2-128	12-JK2-129	"A"

See 12-JK2-100 For sketches and General notes.

"A" - Intermediate stiffeners to be welded to both top & bottom flanges. (A.W.S. min. welds)

12-JK2-101

LICENSED PROFESSIONAL ENGINEER
LESLIE E. ROBERTSON
No. 34360
UNIVERSITY OF THE STATE OF NEW YORK

SKILLING - HELLE - CHRISTIANSEN - ROBERTSON — STRUCTURAL & CIVIL ENGINEERS

PROJECT THE WORLD TRADE CENTER | TITLE PLATE GIRDER SCHEDULE (CONCLUDED) | DATE

REVISIONS
C-7-68
7-19-68
8-30-68
10-15-68
11-5-68
1-20-69

TYPE	Flange Pls Size	Fy	Web Pl Size	Fy	Intermediate Stiffener pairs Size, ea.	Location	Left Conn. Det.	Right Conn. Det.	Remarks
J6H	26"x2½"	36	51"x¾"	36	6"x⅜"	18", 75", 360", 525"	12-JK2-113 (Type E)	12-JK2-128 (Opp hand)	
					10"x⅝"	132", 250", 470"			
J6I	20"x1¾"	36	52½"x¾"	36	6"x⅜"	75", 246", 303", 406"	12-JK2-128	12-JK2-129	"A"
					10"x⅝"	132"			
J6J	20"x1¾"	36	52½"x¾"	36	6"x⅜"	14", 168", 286", 506"	12-JK2-113 (Type F)	12-JK2-113 (Type G)	
					10"x⅝"	54", 396"			
J6K	20"x1¾"	36	52½"x¾"	36	6"x⅜"	14", 55", 207", 318"	12-JK2-129	12-JK2-130	"A"
J6L	24"x1¾"	36	52½"x⅝"	36	6"x⅜"	132", 303", 401", 442"	12-JK2-128A	12-JK2-129	"A"
					10"x⅝"	246"			
J6M	24"x1¾"	36	52½"x⅝"	36	6"x⅜"	132", 470"	12-JK2-113 (Type G)	12-JK2-113 (Type G)	
					10"x⅝"	18", 250", 360"			
J6N	24"x1¾"	36	52½"x⅝"	36	6"x⅜"	14", 49", 139", 306"	12-JK2-129	12-JK2-130	"A"
					10"x⅝"	183 1/16			
J6O	26"x4"	36	48"x1⅜"	36	None	—	12-JK2-134	12-JK2-130	
J6P	26"x4	36	48"x1⅜"	36	None	—	12-JK2-113 (Type J)	12-JK2-113 (Type J)	
J6Q	26"x4"	36	48"x1⅜"	36	None	—	12-JK2-130	12-JK2-130	
J2E	20"x2½"	42	45"x¾"	42	8"x½" Fy=42	38.5", 72.5", 134.5", 168.5", 253.5", 301.5"	12-JK2-131	12-JK2-132	SEE 12-JK2-106 FOR BRACING DETAIL
					8"x1" Fy=42	50.5", 60.5", 146.5", 156.5"			
J2F	28"x2¾"	42	50½"x1"	42	None		12-JK2-135	12-JK2-119A	FL.=10"x3" from N5166.50 to North end. See 12-JK2-118A for detail of hanger at J3-13
J2G	22"x2"	42	52"x¾"	42	10"x⅜"	132", 252"	12-JK2-121	12-JK2-116	
J2H	26"x2½"	36	65"x1"	36	None		12-JK2-128	12-JK2-136	Bm. conn @ both ends 12-JK2-113 type K
J2I	22x2½"	36	65"x¾"	36	6"x⅜"	116", 296"	12-JK2-137	12-JK2-128	Col. conn. 12-JK2-148. Bm. conn @ both ends 12-JK2-113 type L
J4M	16"x1½"	36	44"x½"	36	None		190 kips	190 kips	
J4N	22"x2"	36	66"x¾"	36	None		338 kips	12-JK2-138	Col. conn. 12-JK2-148
J2J	24"x2"	42	52"x¾"	42	10"x⅜"	96", 186", 276", 366", 456"	12-JK2-116	12-JK2-121	

LICENSED PROFESSIONAL ENGINEER — LESLIE E. ROBERTSON — No. 34360 — STATE OF NEW YORK

DRAWN S.C.
REVIEWED E.L.

See 12-JK2-100 For sketches and General notes.

Where connection reaction in kips are given, use standard AISC connection.
"A" - Intermediate stiffeners to be welded to both top & bottom flanges. (A.W.S. min. welds)

12-JK2-102

SKILLING - HELLE - CHRISTIANSEN - ROBERTSON — Structural & Civil Engineers

PROJECT THE WORLD TRADE CENTER | TITLE PLATE GIRDER SCHEDULE (CONTINUED) | DATE 6-7-68

REVISIONS
9-4-68
10-15-68
3-17-69

TYPE	Flange PL's Size	Fy	Web PL Size	Fy	Intermediate Stiffener Pairs Size Ea.	Location	Left Conn. Det.	Right Conn. Det	Remarks
K2A	24" x 2"	36	52" x 3/4"	36	6" x 3/8" 10" x 5/8"	78", 318", 410", 448" 138", 198", 258",	12-JK2-128	12-JK2-129	"A"
K2B	24" x 2"	36	52" x 3/4"	36	6" x 3/8" 10" x 5/8"	87", 429", 30", 144", 258", 372", 486"	12-JK2-113 (TYPE E)	12-JK2-113 (TYPE E)	-
K2C	24" x 2"	36	52" x 3/4"	36	6" x 3/8" 10" x 5/8"	14", 52", 132", 364" 210", 304"	12-JK2-129	12 JK2-128 (OPP. HAND)	"A"
K2D	24" x 2"	36	52" x 3/4"	36	6" x 3/8" 10" x 5/8"	78", 258", 318", 436", 138",	12-JK2-141	12-JK2-129	"A"
K2E	24" x 2"	36	52" x 3/4	36	6" x 3/8" 10" x 5/8"	99", 441" 42", 156", 270", 384", 498"	12-JK2-113 (TYPE H)	12-JK2-113 (TYPE E)	
K2F	24" x 2"	36	52" x 3/4"	36	6" x 3/8" 10" x 5/8"	14", 52", 132", 364" 210", 304"	12-JK2-129	12-JK2-128 (OPP HAND)	"A"
K2G	26" x 2"	36	52" x 3/4"	36	6" x 3/8" 10" x 5/8"	78", 318", 414", 460", 138" 258"	12-JK2-149	12-JK2-129	"A"
K2H	26" x 2½"	36	51" x 3/4"	36	6" x 3/8" 10" x 5/8"	75", 417", 18", 132", 246", 360", 474",	12-JK2-113 (TYPE E)	12-JK2-113 (TYPE E)	
K2I	26" x 2"	36	52" x 3/4	36	6" x 3/8" 10" x 5/8"	14", 60", 162", 294", 360", 206",	12-JK2-139	12-JK2-140	"A"
K2J	28" x 3/4"	36	49½" x 7/8"	36	8" x ½" 10" x 5/8"	90", 234", 522", 162", 306", 378", 450",	12-JK2-140	12-JK2-113 (TYPE M)	
K2K	26" x 2½"	36	51" x 7/8"	36	8" x ½" 10" x 5/8"	18", 126", 198", 450",	12-JK2-129	12-JK2-133	"A"
K2L	24" x 2½"	36	51" x 3/4"	36	6" x 3/8" 10" x 5/8"	48", 120", 276", 420", 468 192", 360",	12-JK2-139	12-JK2-113 (TYPE E)	
K2M	24" x 2½"	36	51" x 3/4"	36	6" x 3/8" 10" x 5/8"	18", 66", 174", 318", 402", 534", 234", 486",	12-JK2-129	12-JK2-128 (OPP. HAND)	"A"
J4P	22" x 3"	42	50" x 3/4"	42	6" x 3/8"	402"	12-JK2-121A	12-JK1-35	
J4Q	20" x 3"	42	50" x 3/4"	42	6 x 3/8"	390"	12-JK2-145	12-JK2-121	
K5A	26" x 3½"	42	53" x 3/4"	42	6 x 3/8"	270", 390"	12-JK2-121	12-JK2-147	see 12-JK2-146 for Hanger at K61-5.

LICENSED PROFESSIONAL ENGINEER
LESLIE E. ROBERTSON
No. 34360
UNIVERSITY OF THE STATE OF NEW YORK

DRAWN S.C
REVIEWED E.L.

See 12-JK2-100 FOR SKETCHES AND GENERAL NOTES.

"A" - INTERMEDIATE STIFFENERS TO BE WELDED TO BOTH TOP & BOTTOM FLANGES. (A.W.S. MIN)

12-JK2-103

SKILLING, HELLE, CHRISTIANSEN, ROBERTSON — Structural & Civil Engineers

PROJECT: THE WORLD TRADE CENTER | TITLE: PLATE GIRDER WELDING SCHEDULE | DATE: 1-8-69

REVISIONS

GIRDER TYPE	WELD DETAIL	WELD a
J2A	1	1/2
J2B	1	1/2
J2C	2	7/8
J2D	3	
J2E	*1	1/2
J2F	2	5/8
J2G	1	3/8
J2H	1	1/2
J2I	1	1/2
J2J	1	1/2
J4A	3	
J4B	2	3/4
J4C	1	1/2
J4D	See 12-JK2-105	
J4E	3	
J4F	2	3/4
J4G	2	3/4
J4H	1	5/8
J4I	1	5/8

GIRDER TYPE	WELD DETAIL	WELD a
J4J	1	1/2
J4K	1	5/8
J4L	1	5/8
J4M	1	3/8
J4N	1	3/8
J4P	1	1/2
J4Q	1	5/8
J6A	1	3/8
J6B	1	1/2
J6C	1	1/2
J6D	1	3/8
J6E	1	3/8
J6F	1	3/8
J6G	1	3/8
J6H	1	1/2
J6I	1	3/8
J6J	1	3/8
J6K	1	3/8
J6L	1	3/8

GIRDER TYPE	WELD DETAIL	WELD a
J6M	1	3/8
J6N	1	3/8
J6O	2	5/8
J6P	2	5/8
J6Q	2	1/2
K2A	1	3/8
K2B	1	3/8
K2C	1	3/8
K2D	1	1/2
K2E	1	1/2
K2F	1	3/8
K2G	1	3/8
K2H	1	1/2
K2I	1	3/8
K2J	1	5/8
K2K	1	1/2
K2L	1	1/2
K2M	1	1/2
K5A	1	1/2

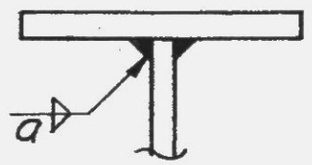

WELD DETAIL 1

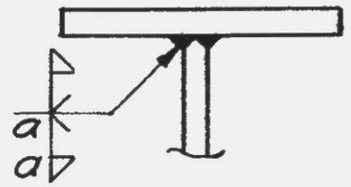

WELD DETAIL 2

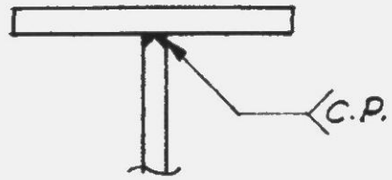

WELD DETAIL 3

NOTES:

1. Welding Electrodes to be E70XX.
2. This schedule is intended to show typical web-flange welding. Welds shown in detail on 12-JK2-105 to 158 shall apply for portion of girder shown.
3. Where column bears on girder from above or below, fit web to bear on loaded flange for length of 2'-0", unless weld detail 3 is called for. Complete penetration weld may be used as an option to fitting of web.
4. * — Complete penetration weld between web & top flange thru-out.

LICENSED PROFESSIONAL ENGINEER — LESLIE E. ROBERTSON — No. 34360 — UNIVERSITY OF THE STATE OF NEW YORK

DESIGNED

DRAWN: S.T.M.

REVIEWED: F I

12-JK2-104

SKILLING, HELLE, CHRISTIANSEN, ROBERTSON — Structural & Civil Engineers

PROJECT THE WORLD TRADE CENTER | TITLE PLATE GIRDER J-4D | DATE 5-1-68

REVISIONS
- 7-19-68
- 12-3-68
- 1-8-69
- 1-20-69

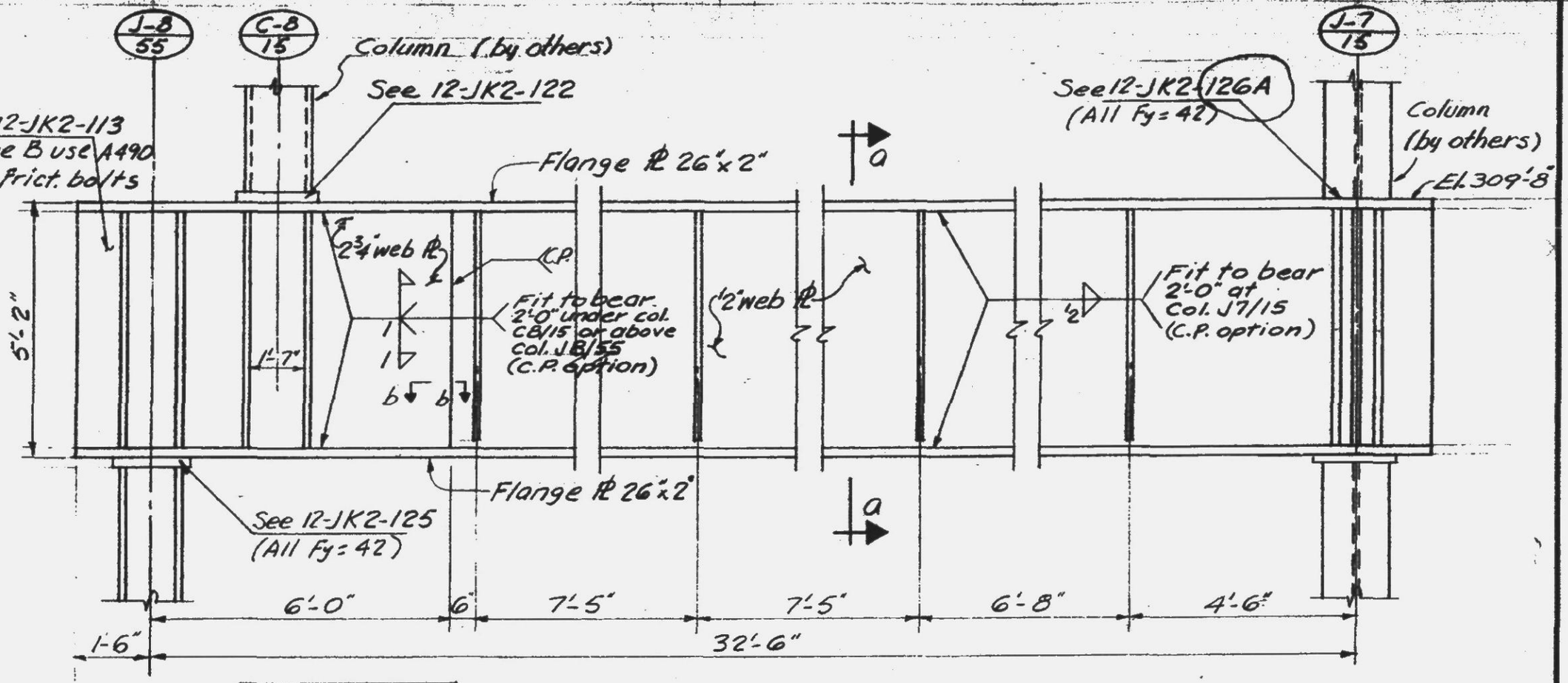

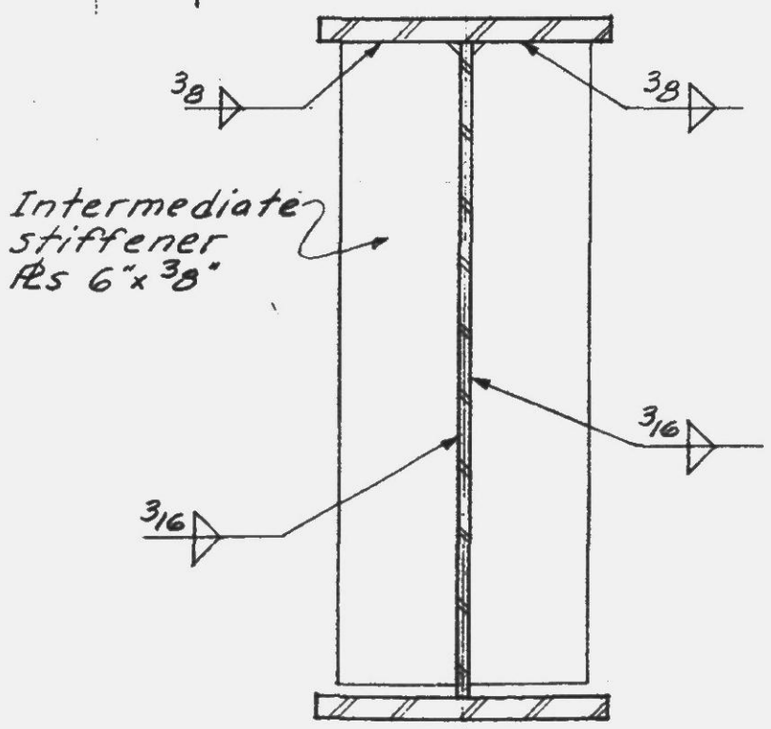

Section a-a

Note:
1. All material with Fy=42 except as noted.

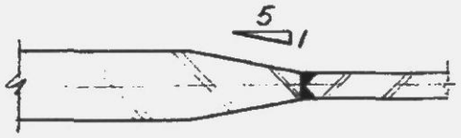

Section b-b

LICENSED PROFESSIONAL ENGINEER
LESLIE E. ROBERTSON
No. 34360
UNIVERSITY OF THE STATE OF NEW YORK

DRAWN A.F.

REVIEWED E.L.

12-JK2-105

SKILLING - HELLE - CHRISTIANSEN - ROBERTSON Structural & Civil Engineers

PROJECT THE WORLD TRADE CENTER | TITLE GIRDER BRACING DETAILS | DATE 5-1-68

REVISIONS

7-19-68

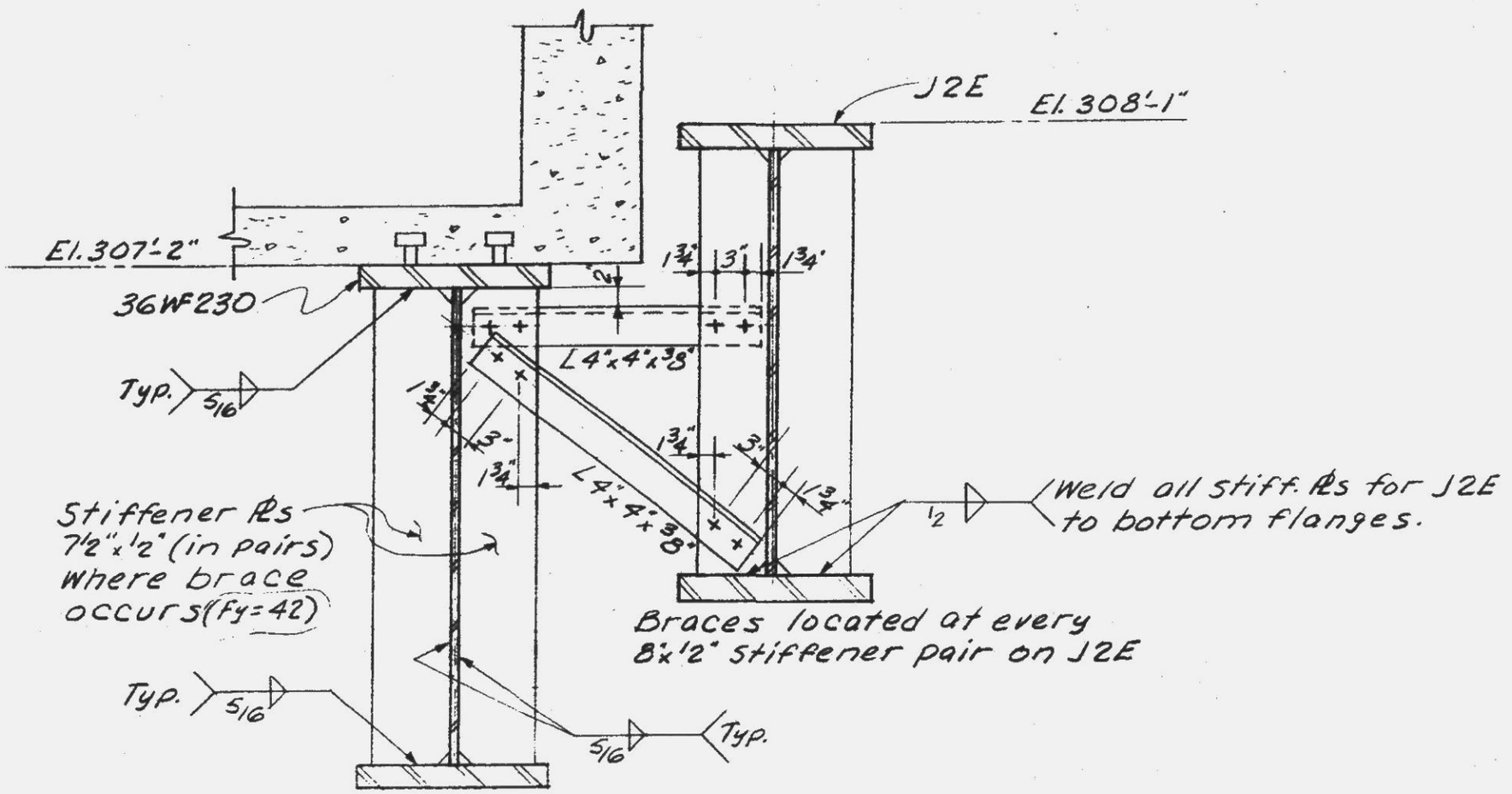

Note:

1. Bolts are 1"ϕ A325 H.S. friction type connections.

LICENSED PROFESSIONAL ENGINEER
LESLIE E. ROBERTSON
No. 34360
UNIVERSITY OF THE STATE OF NEW YORK

12-JK2-106

SKILLING, HELLE, CHRISTIANSEN, ROBERTSON — Structural & Civil Engineers

PROJECT THE WORLD TRADE CENTER | TITLE GIRDER DETAILS | DATE 4-30-69

REVISIONS

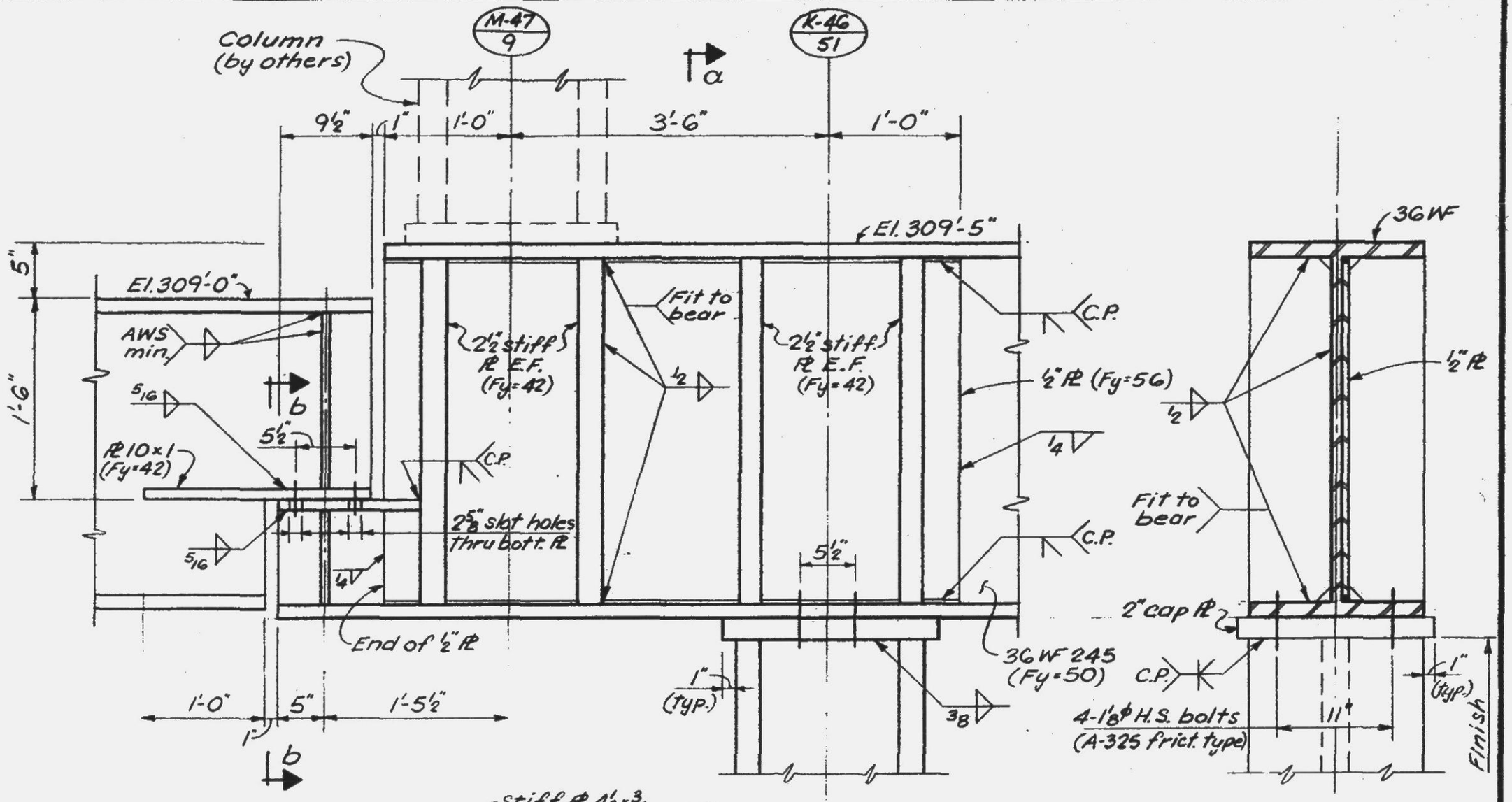

Section a-a

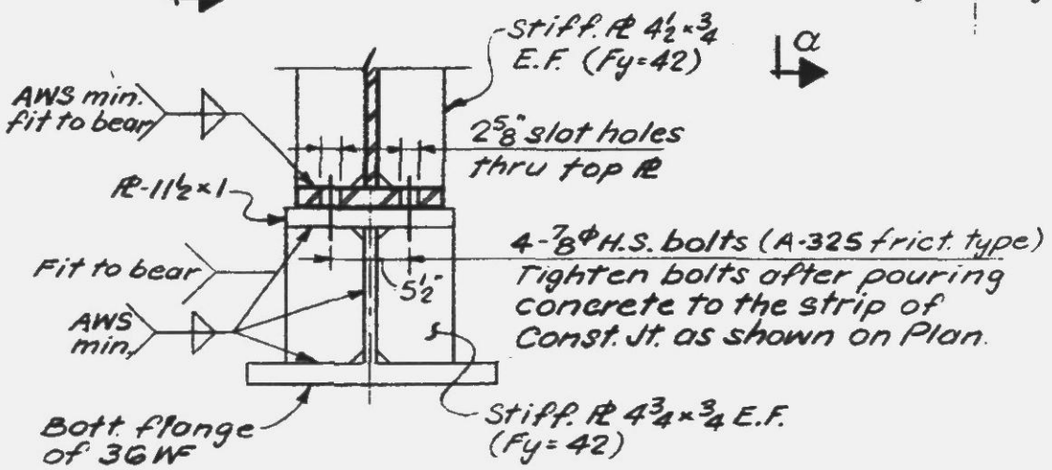

Section b-b

Notes:
1. All welds to be E70xx.
2. Provide washers 2½ × ⅝ (sq. or round) with Fy=50 ksi for all bolts over slot holes.

LICENSED PROFESSIONAL ENGINEER
LESLIE E. ROBERTSON
No. 34360
UNIVERSITY OF THE STATE OF NEW YORK

DESIGNED

DRAWN
S.C.

REVIEWED
E.L.

12-JK2-107

SKILLING, HELLE, CHRISTIANSEN, ROBERTSON — Structural & Civil Engineers

PROJECT THE WORLD TRADE CENTER | TITLE GIRDER DETAILS | DATE 4-30-69

REVISIONS

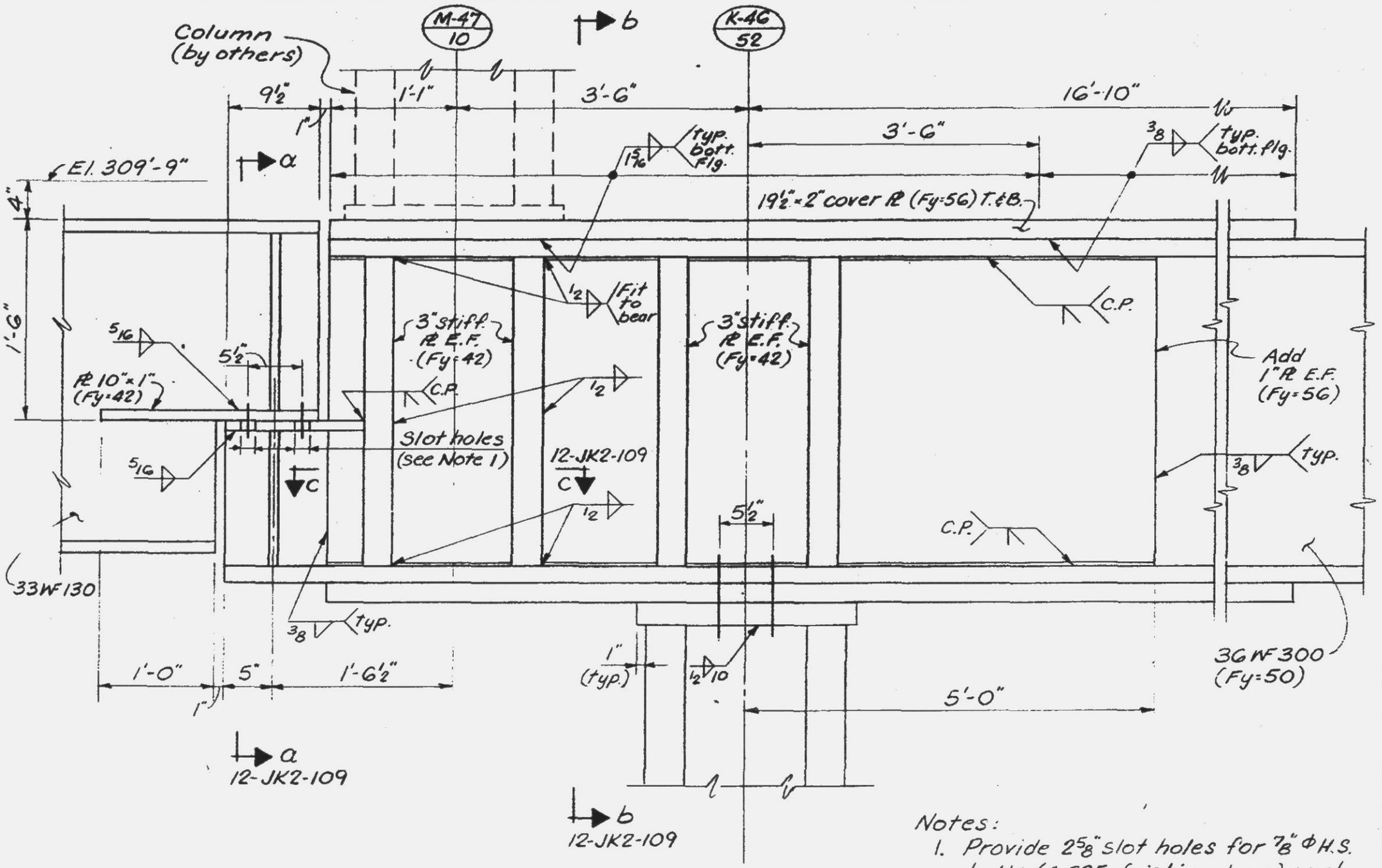

Notes:

1. Provide $2\frac{5}{8}$" slot holes for $\frac{7}{8}$" Φ H.S. bolts (A-325 friction type) as shown. Tighten bolts after pouring concrete to the strip of const jt. as shown on Plan.
2. All welds to be E70xx.
3. Provide washers $2\frac{1}{2} \times \frac{5}{8}$ (sq. or round) with Fy=50 ksi for all bolts over slot holes.

LICENSED PROFESSIONAL ENGINEER — LESLIE E. ROBERTSON — No. 34360 — UNIVERSITY OF THE STATE OF NEW YORK

DESIGNED

DRAWN S.C.

REVIEWED E.L.

12-JK2-108

SKILLING, HELLE, CHRISTIANSEN, ROBERTSON — Structural & Civil Engineers

PROJECT: THE WORLD TRADE CENTER | TITLE: GIRDER DETAILS | DATE: 4-30-69

REVISIONS

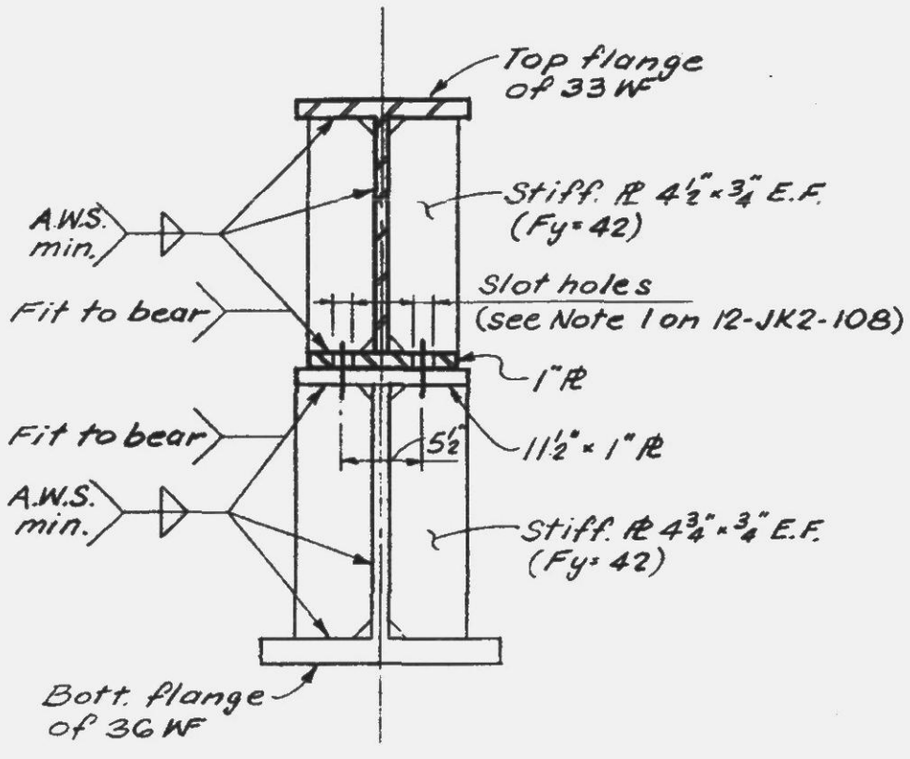

Section a-a

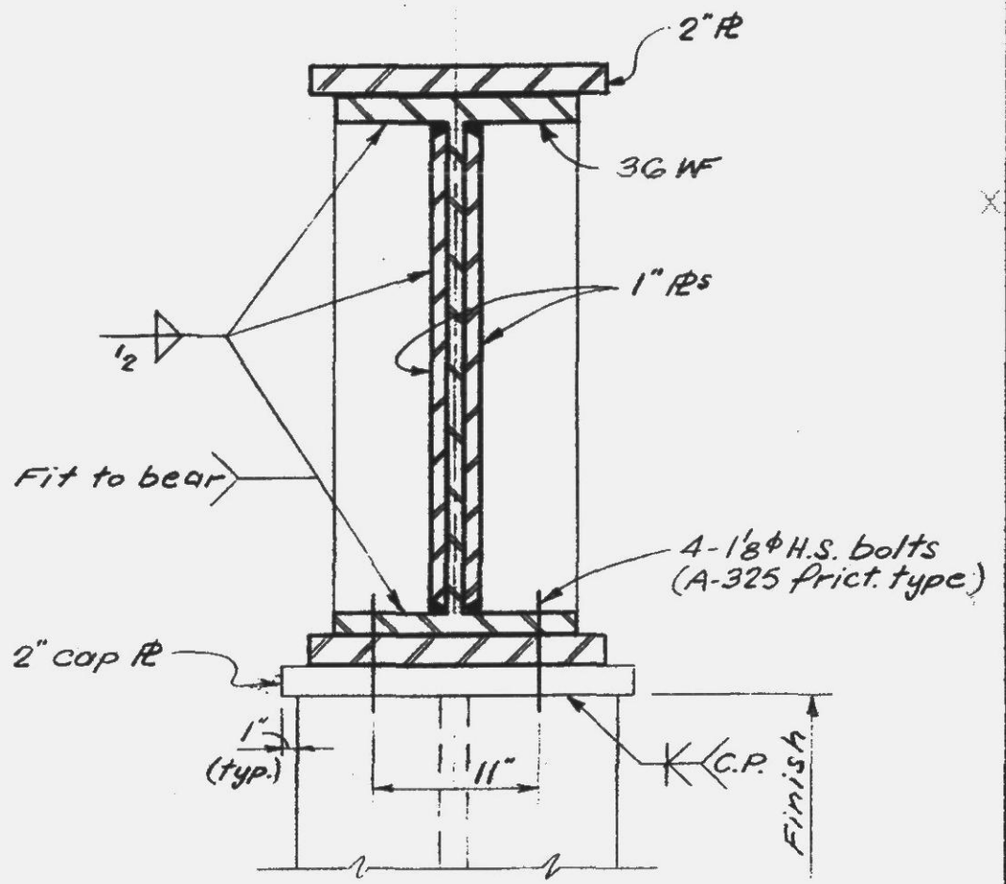

Section b-b

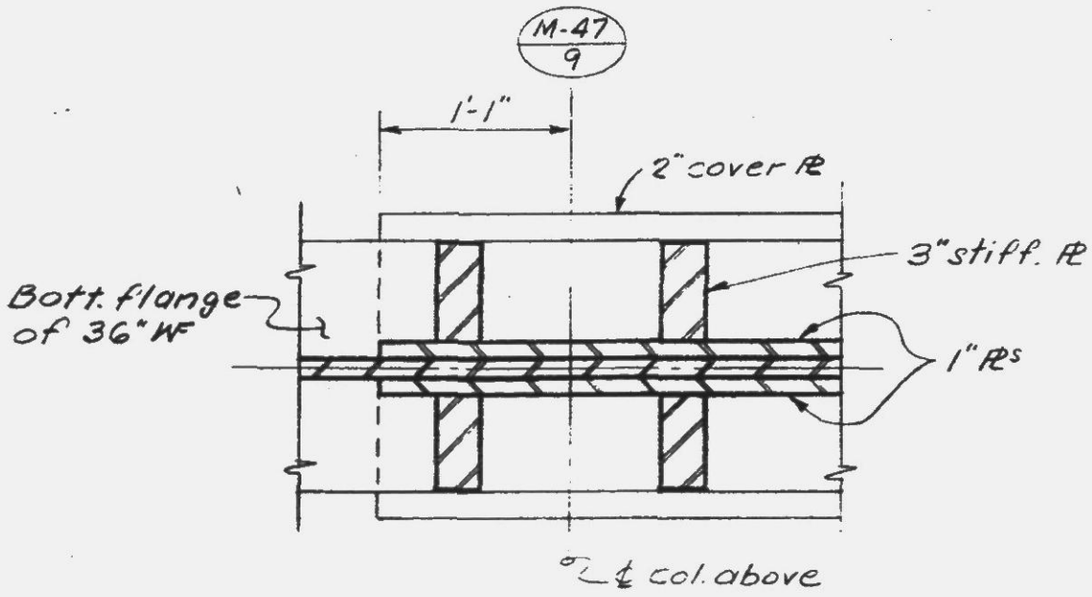

Section c-c

LICENSED PROFESSIONAL ENGINEER — LESLIE E. ROBERTSON — No. 34360 — UNIVERSITY OF THE STATE OF NEW YORK

DESIGNED

DRAWN: S.C.

REVIEWED: E.L.

12-JK2-109

SKILLING - HELLE - CHRISTIANSEN - ROBERTSON — Structural & Civil Engineers

PROJECT THE WORLD TRADE CENTER | TITLE TYPICAL BEAM TO GIRDER CONNECTION | DATE 5-1-68

REVISIONS
7-19-68

NO STIFFENER AT CONNECTION

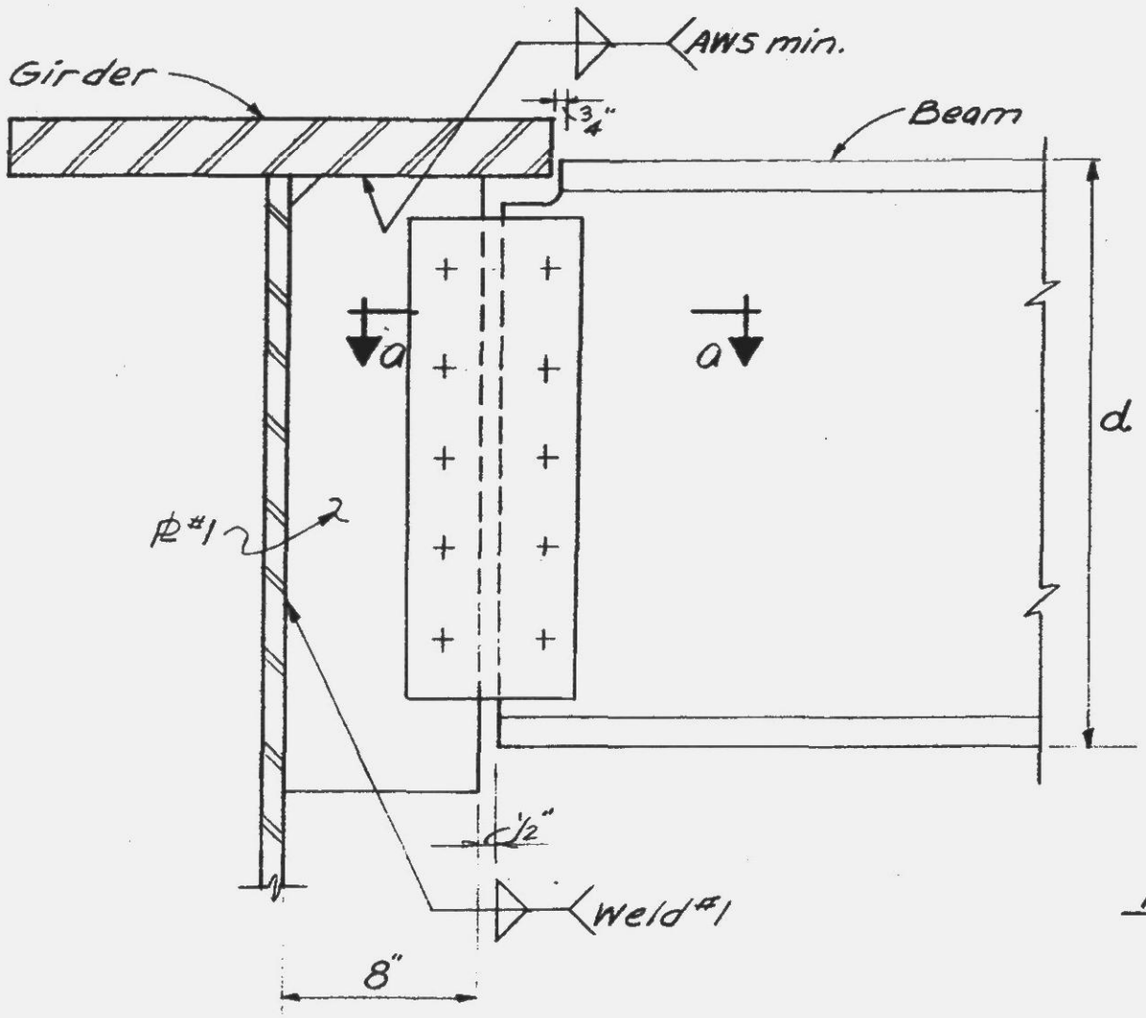

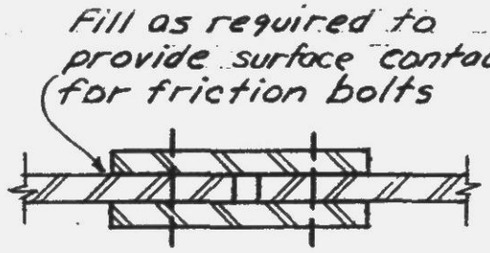

Section a-a

NOTES:

1. Use H.S. friction bolts. A325 (A490 for all connections at El. 310 within Zone J-2 & J-4 areas.)
2. Size and number of bolts, shear plate thickness and Weld #1 to be determined by beam reaction. See plans for beam reaction.
3. Forces at the connection are a vertical reaction from the beam (R), and a horizontal force equal to $\frac{16}{d"}$ (R)

LICENSED PROFESSIONAL ENGINEER
LESLIE E. ROBERTSON
No. 34360
UNIVERSITY OF THE STATE OF NEW YORK

12-JK2-111

SKILLING - HELLE - CHRISTIANSEN - ROBERTSON Structural & Civil Engineers

PROJECT THE WORLD TRADE CENTER | TITLE TYPICAL BEAM TO GIRDER CONNECTION | DATE 5-1-68

REVISIONS

7-19-68

CONNECTION AT STIFFENER

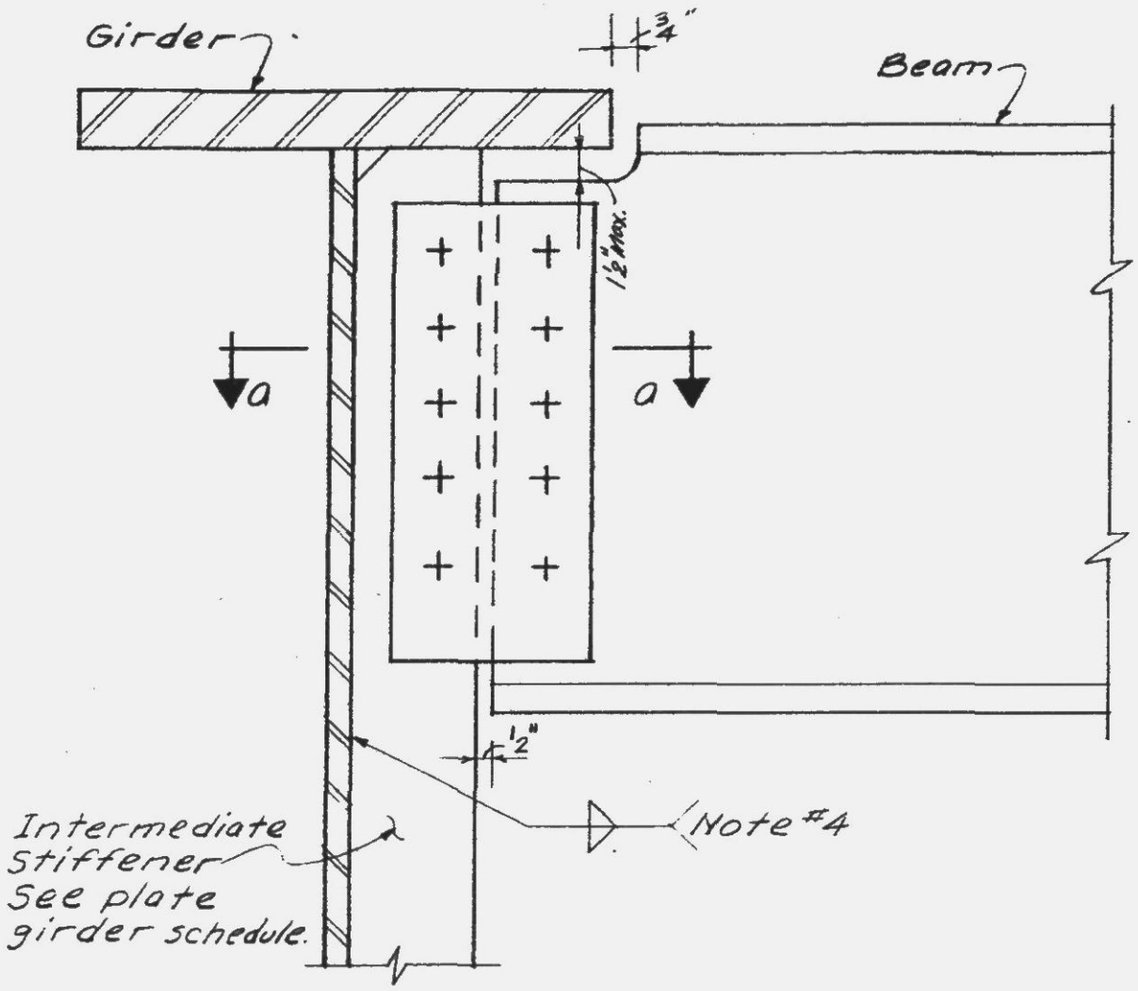

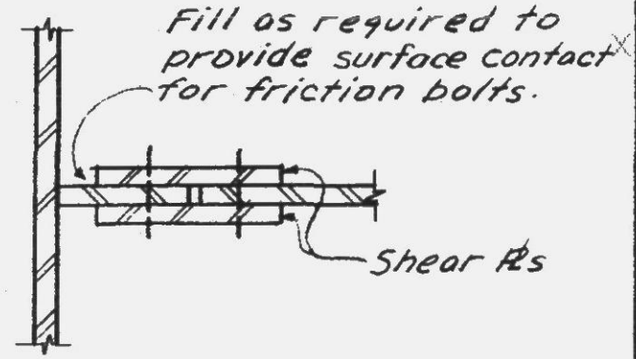

Section a-a

NOTES:

1. Use H.S. friction bolts. A325 (A490 bolts for all connections at El. 310 within Zone J-2 & J-4 areas)
2. Size and number of bolts and shear plate thickness to be determined by beam reaction. See plans for beam reaction.
3. Stiffener width and/or thickness may be increased above that shown in the schedule when necessary to improve beam connection.
4. Increase fillet weld above AWS min. when required by beam reaction.

LICENSED PROFESSIONAL ENGINEER LESLIE E. ROBERTSON No. 34360 UNIVERSITY OF THE STATE OF NEW YORK

12-JK2-112

SKILLING - HELLE - CHRISTIANSEN - ROBERTSON Structural & Civil Engineers

PROJECT THE WORLD TRADE CENTER | TITLE GIRDER CONNECTION DETAIL | DATE 5-1-68

REVISIONS

6-7-68

7-19-68

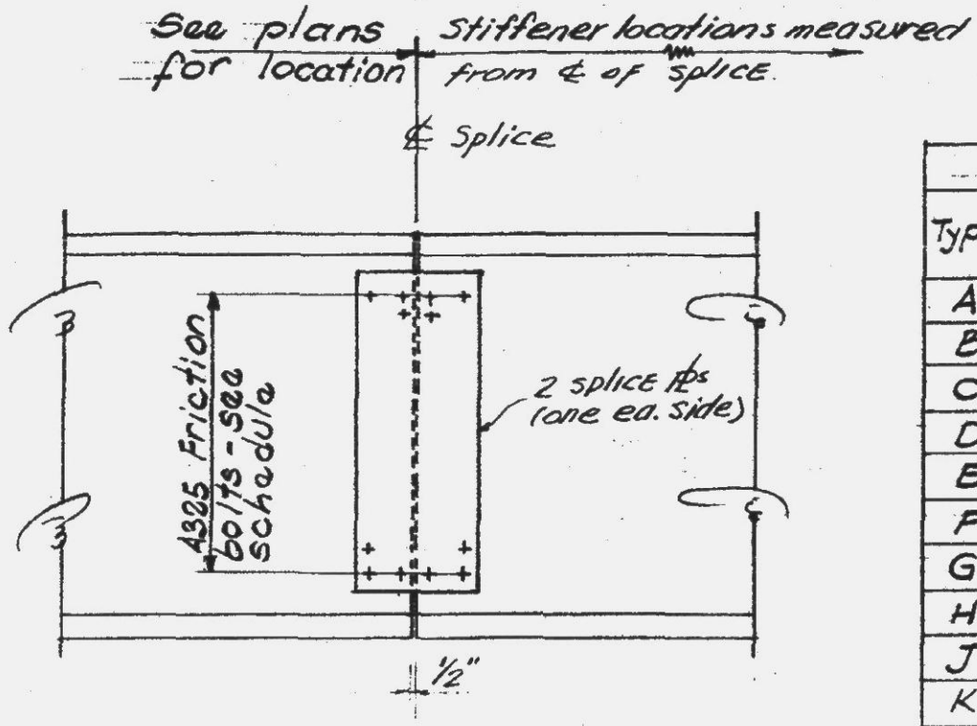

SCHEDULE		
Type	Total No. of Bolts	Splice Plate Thickness
A	24 - 1⅛" ϕ	⅜"
B	36 - 1" ϕ	½"
C	78 - 1⅛" ϕ	13/16"
D	56 - 1" ϕ	⅝"
E	44 - 1" ϕ	⅝"
F	48 - 1" ϕ	⅝"
G	40 - 1" ϕ	½"
H	52 - 1" ϕ	9/16"
J	72 - 1⅛" ϕ	⅞"
K	12 - ¾" ϕ	¼"
L	20 - 1" ϕ	⅜"
M	48 - 1⅛" ϕ	½"

Notes:

1. Splice plates are Fy42.
2. If joining webs are unequal in thickness fill plates are required. Insure surface contact for friction bolts.

LICENSED PROFESSIONAL ENGINEER
LESLIE E. ROBERTSON
No. 34360
UNIVERSITY OF THE STATE OF NEW YORK

12-JK2-113

SKILLING - HELLE - CHRISTIANSEN -- ROBERTSON — Structural & Civil Engineers

PROJECT: THE WORLD TRADE CENTER | TITLE: GIRDER CONNECTION DETAIL | DATE: 5-1-68

REVISIONS
7-19-68

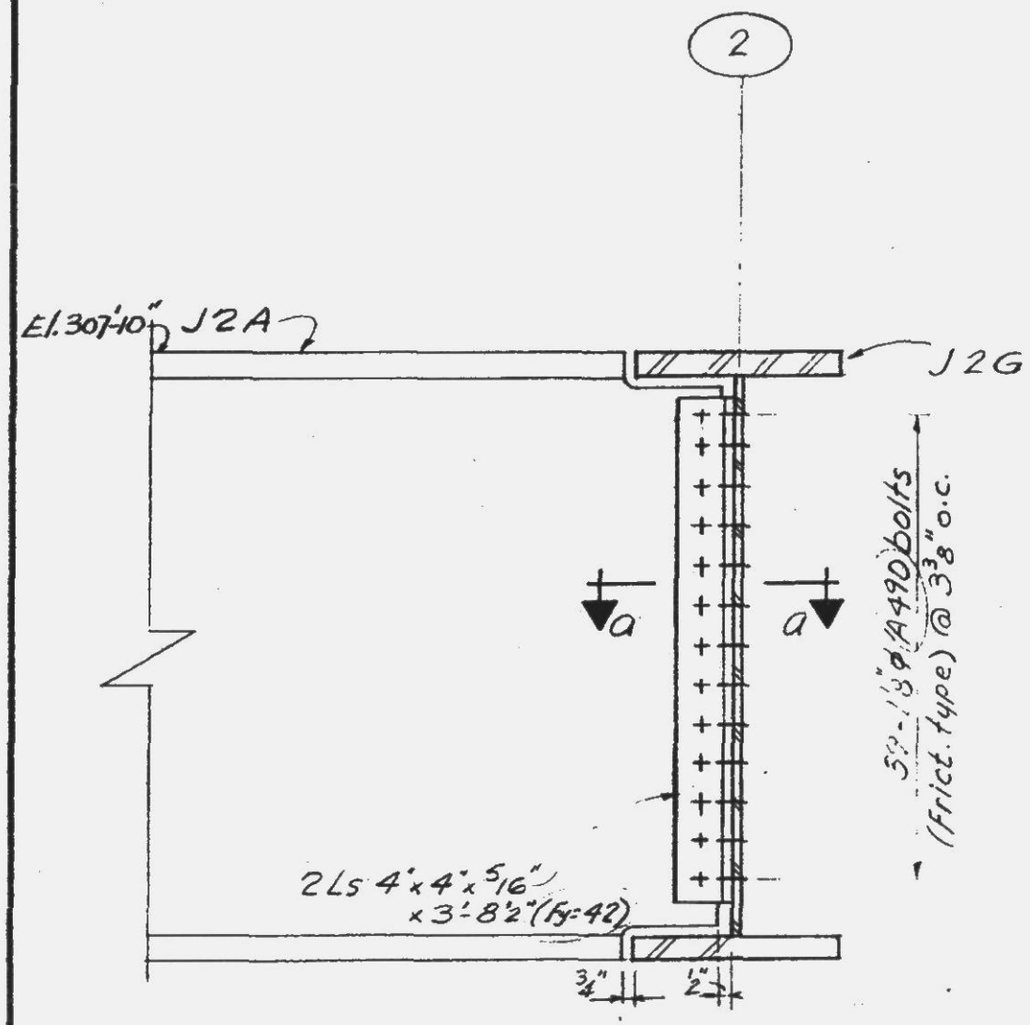

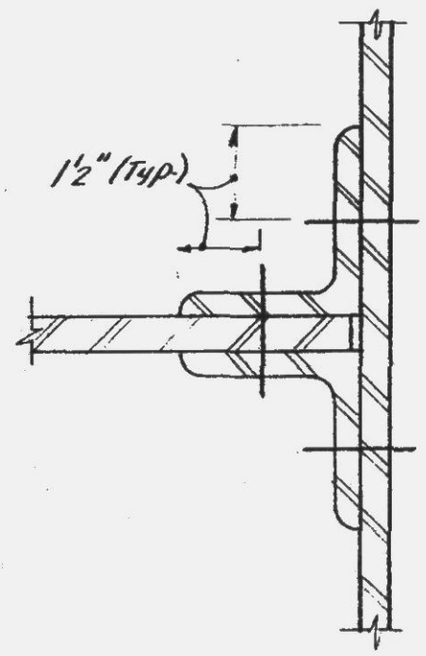

Section a-a

LICENSED PROFESSIONAL ENGINEER
LESLIE E. ROBERTSON
No. 34360
UNIVERSITY OF THE STATE OF NEW YORK

12-JK2-114

SKILLING HELLE CHRISTIANSEN ROBERTSON — STRUCTURAL CONSULTING ENGINEERS

PROJECT: THE WORLD TRADE CENTER | TITLE: GIRDER CONNECTION DETAIL | DATE: 5-17-68

REVISIONS

7-19-68

Note: Stiffener locations for J2B measured from ℄.

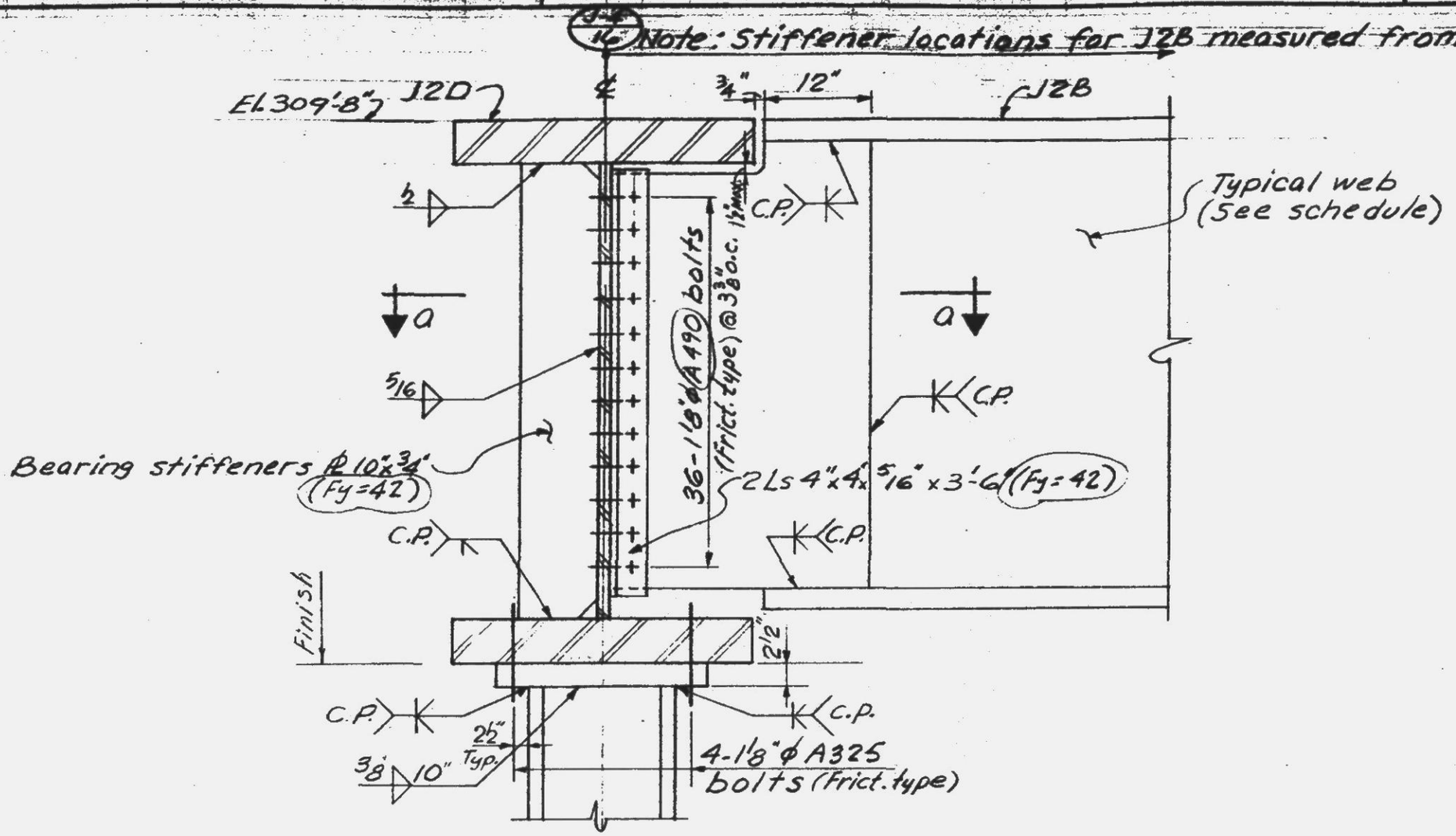

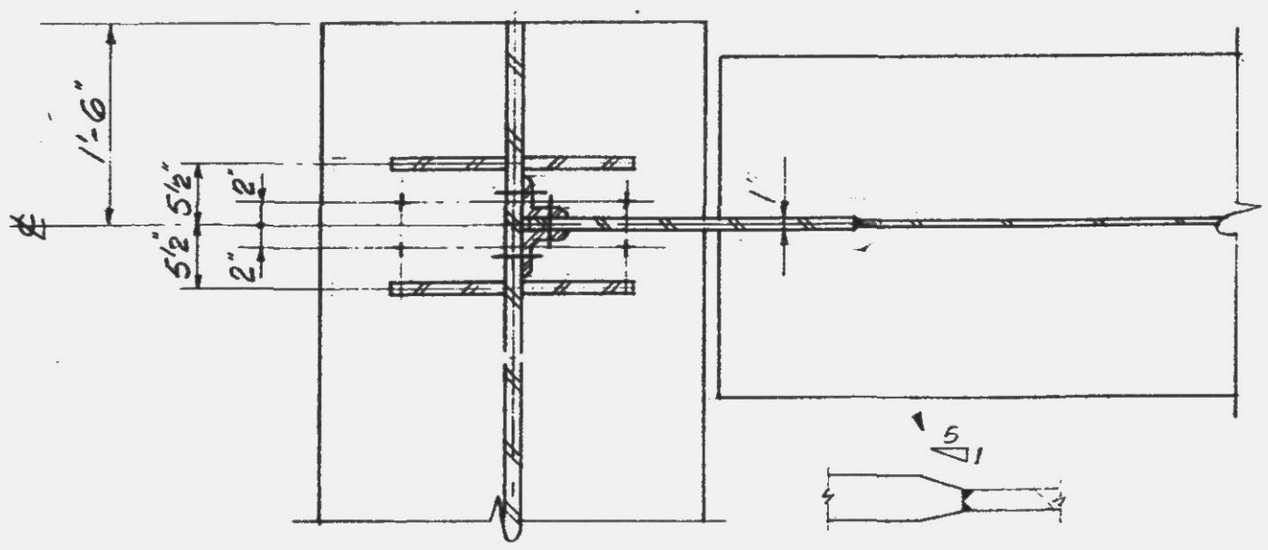

Section a-a

Note:
Some bearing stiffeners omitted from elevation for clarify, see section a-a. Welds are typical.

LICENSED PROFESSIONAL ENGINEER — LESLIE E. ROBERTSON — No. 34360 — UNIVERSITY OF THE STATE OF NEW YORK

12-JK2-115

REVISIONS

7-19-68

8-30-68

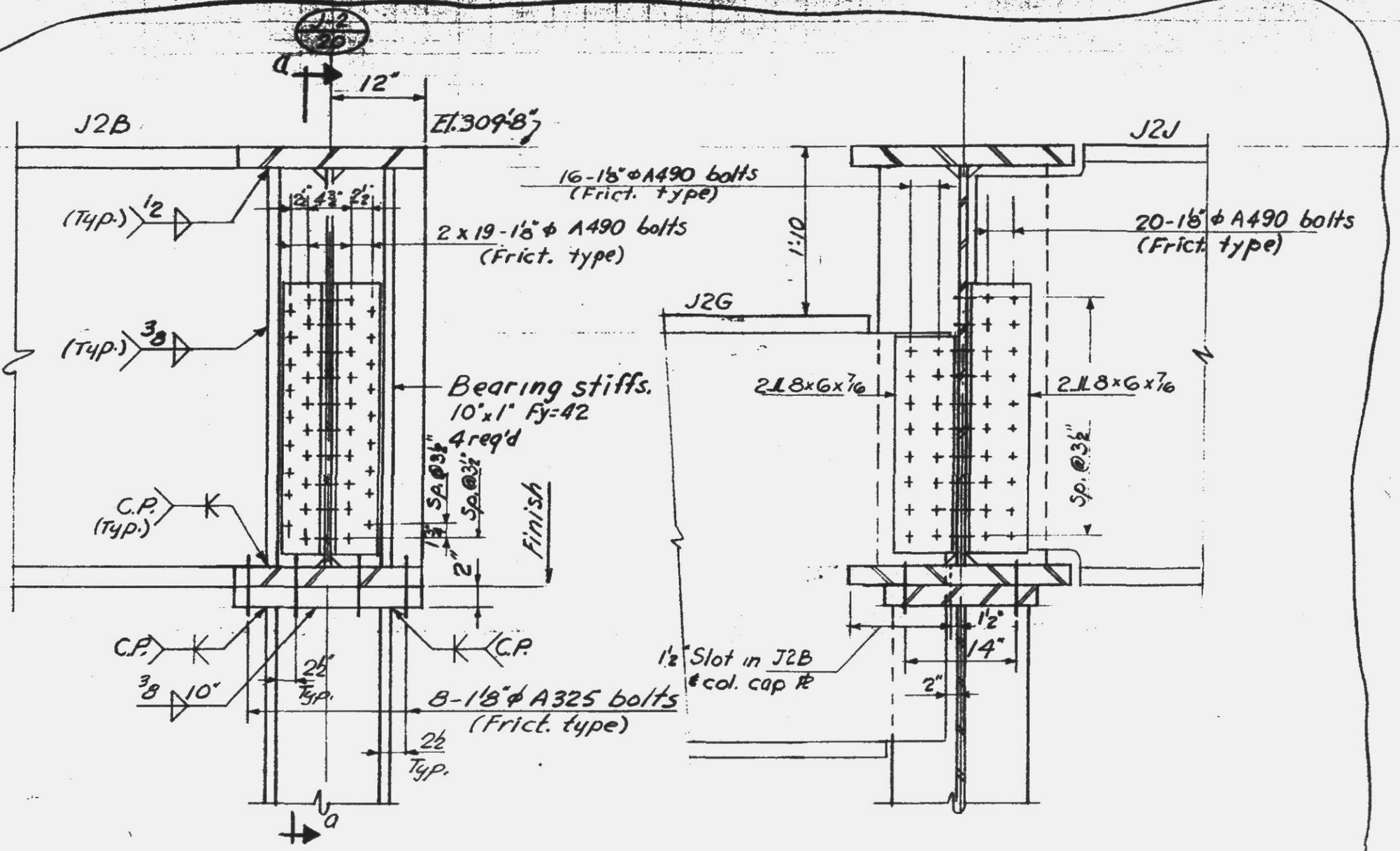

Section a-a

LICENSED PROFESSIONAL ENGINEER
LESLIE E. ROBERTSON
No. 34360
UNIVERSITY OF THE STATE OF NEW YORK

12-JK2-116

SKILLING - HELLE - CHRISTIANSEN - ROBERTSON Structural & Civil Engineers

PROJECT THE WORLD TRADE CENTER | TITLE GIRDER CONNECTION DETAILS | DATE 5-1-68

REVISIONS

7-19-68

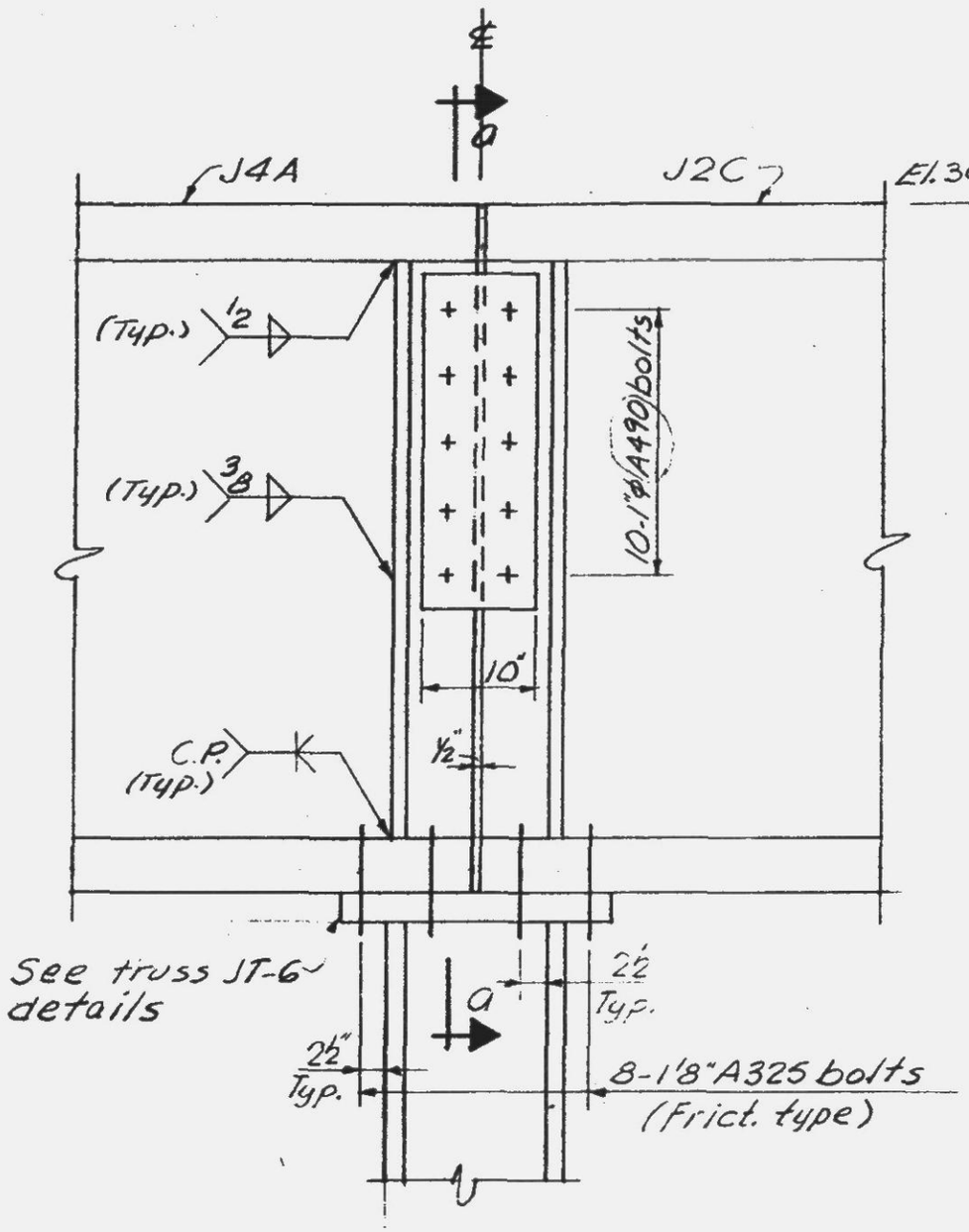

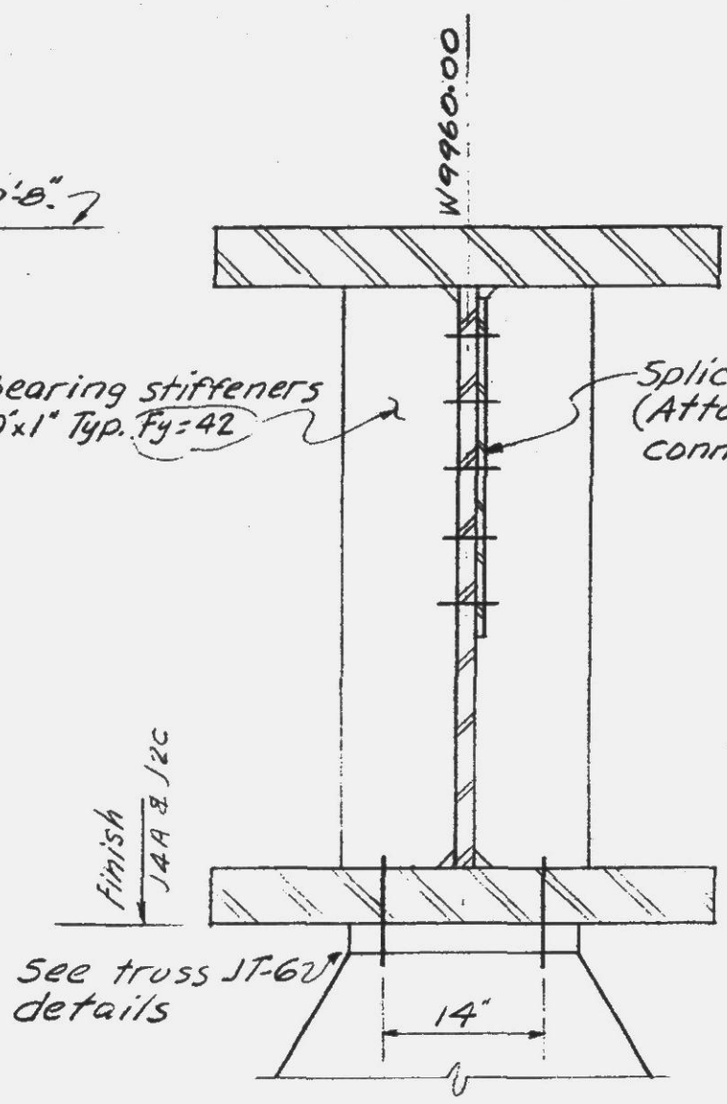

Section a-a

LICENSED PROFESSIONAL ENGINEER LESLIE E. ROBERTSON No. 34560 STATE OF NEW YORK

12-JK2-117

SKILLING - HELLE - CHRISTIANSEN - ROBERTSON — Structural & Civil Engineers

PROJECT THE WORLD TRADE CENTER | TITLE GIRDER CONNECTION DETAILS | DATE 5-1-68

REVISIONS
7-19-68

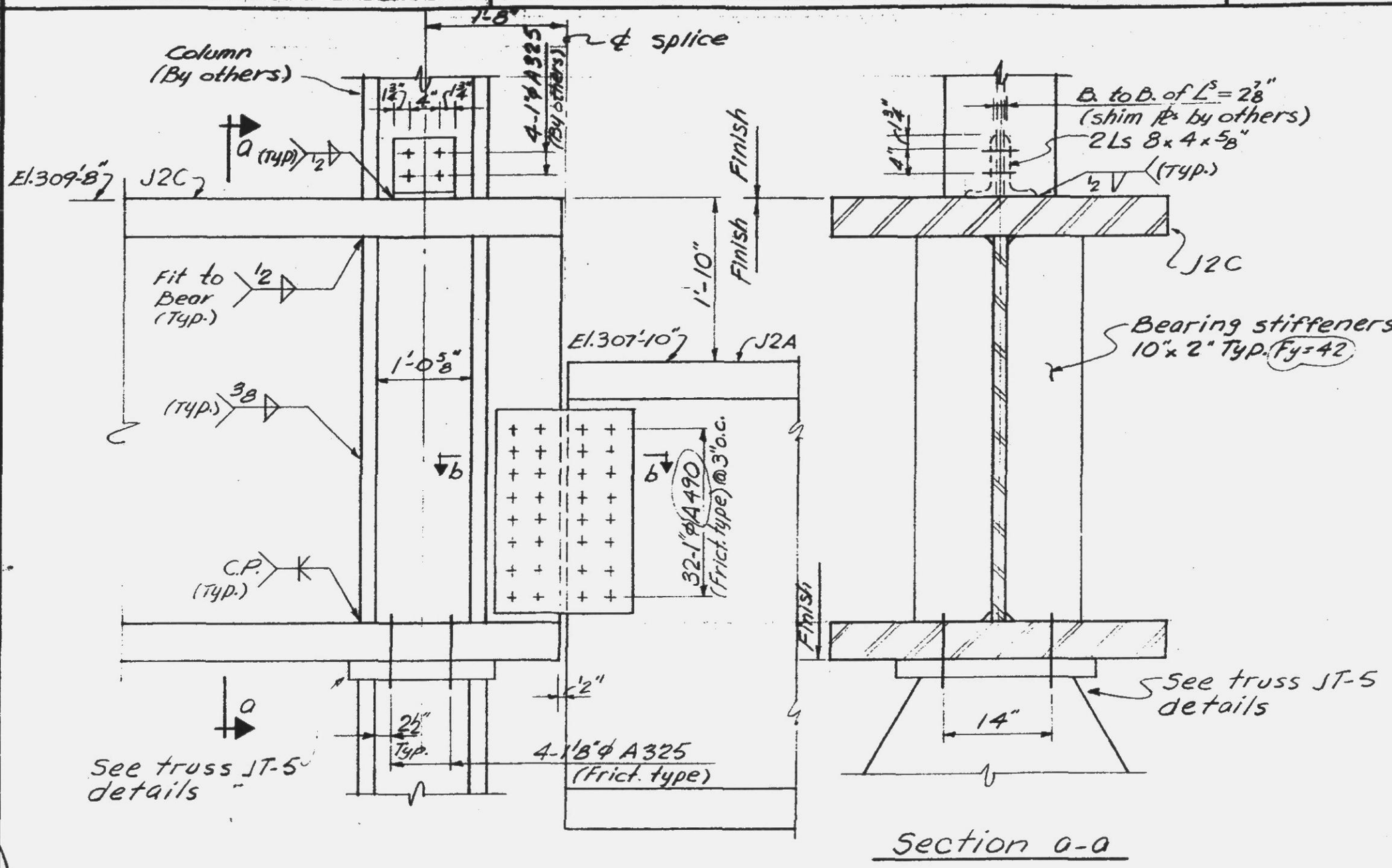

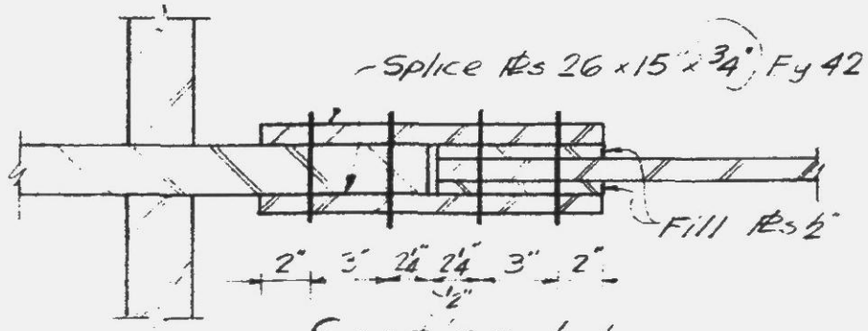

Section b-b

LICENSED PROFESSIONAL ENGINEER
LESLIE E. ROBERTSON
No. 34360
UNIVERSITY OF THE STATE OF NEW YORK

12-JK2-118

SKILLING - HELLE - CHRISTIANSEN - ROBERTSON Structural & Civil Engineers

PROJECT THE WORLD TRADE CENTER | TITLE CONNECTION DETAIL | DATE 6-28-68

REVISIONS
11-5-68
1-8-69

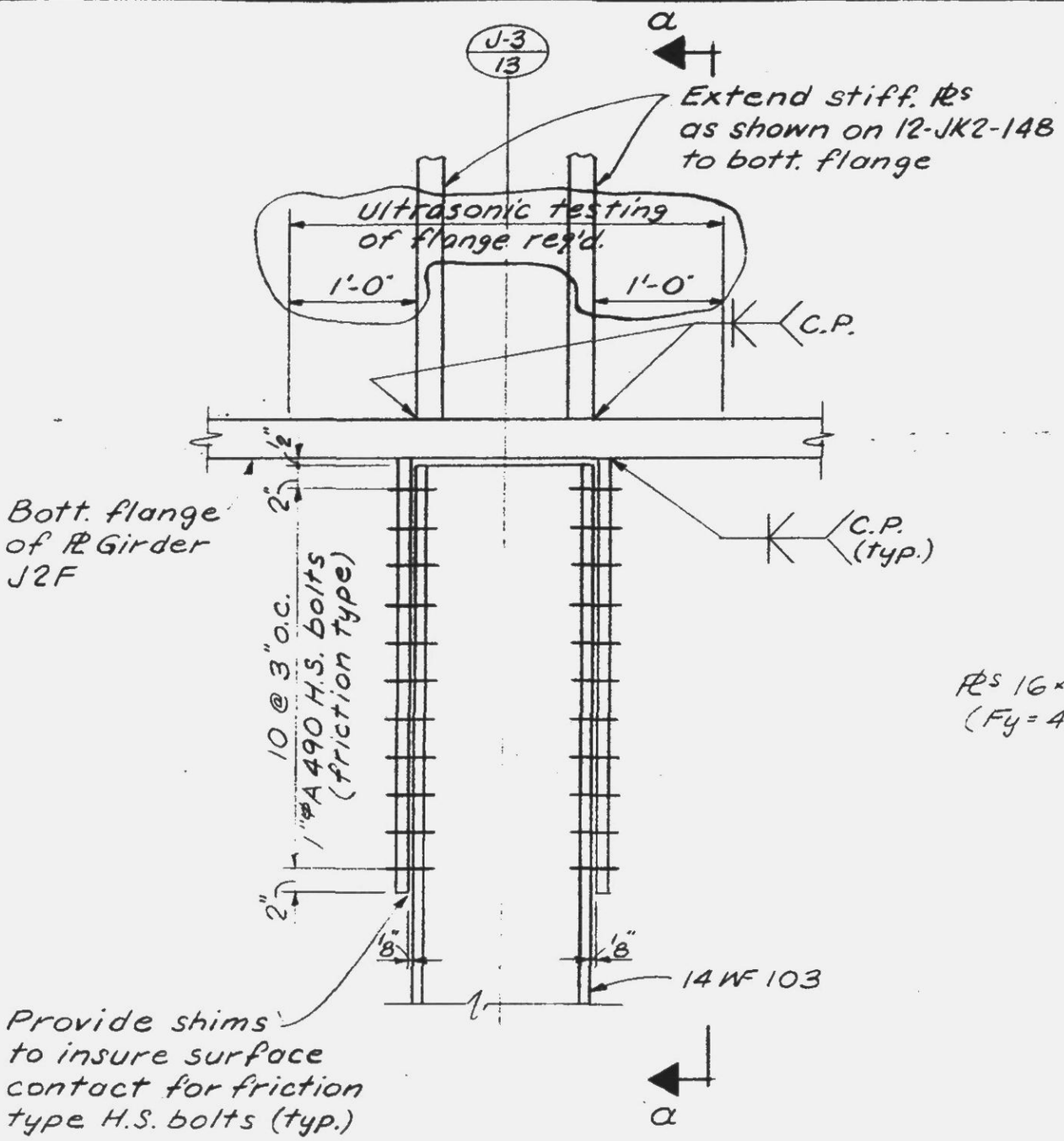

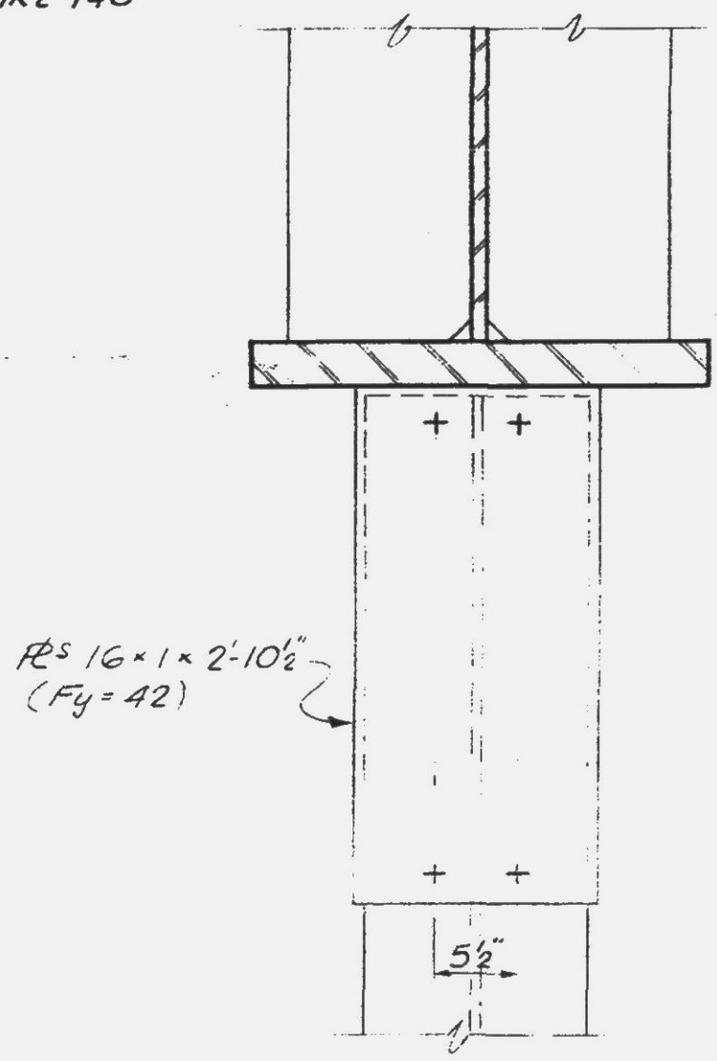

Section a-a

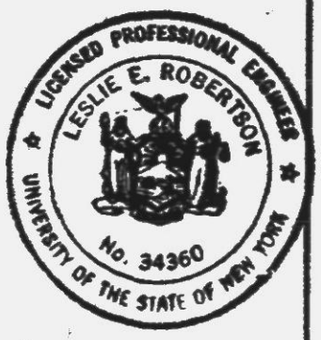

DRAWN
A.F.

REVIEWED
E.L.

12-JK2-118A

SKILLING - HELLE - CHRISTIANSEN - ROBERTSON Structural & Civil Engineers

PROJECT THE WORLD TRADE CENTER | TITLE GIRDER CONNECTION DETAIL | DATE 5-1-68

REVISIONS
6-7-68
7-19-68
9-4-68

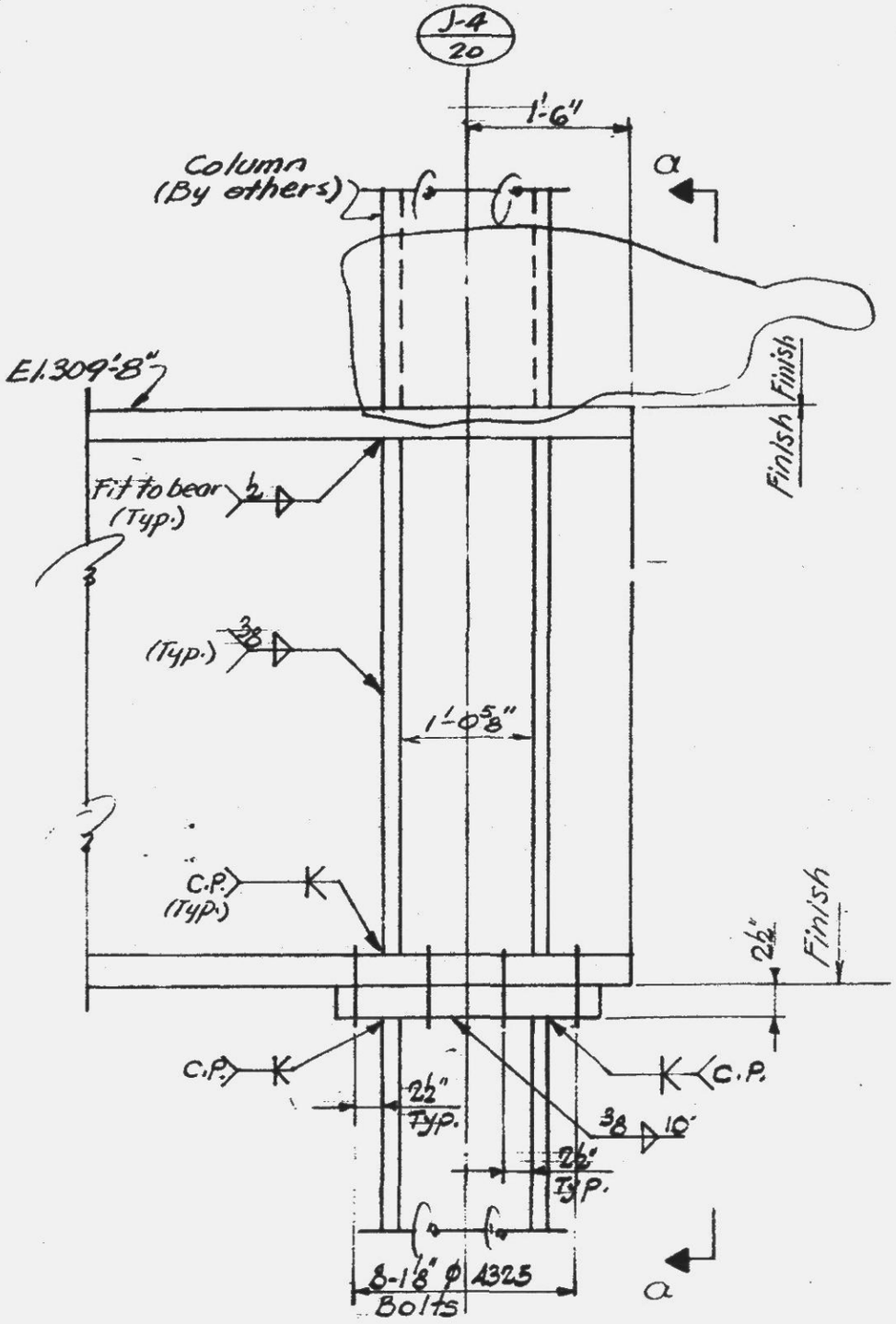

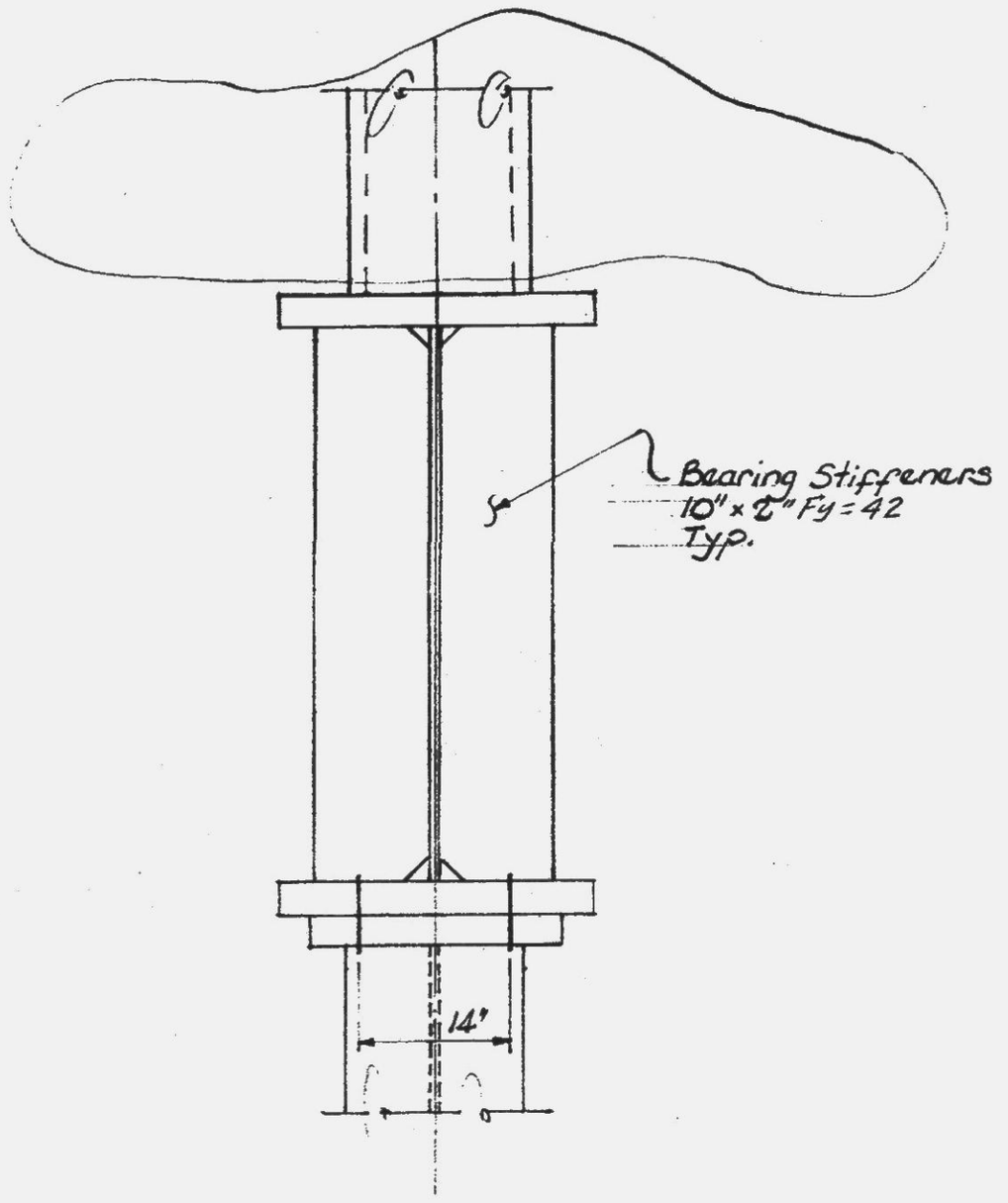

Section a-a

LICENSED PROFESSIONAL ENGINEER
LESLIE E. ROBERTSON
No. 34360
UNIVERSITY OF THE STATE OF NEW YORK

12-JK2-119

SKILLING - HELLE - CHRISTIANSEN - ROBERTSON Structural & Civil Engineers

PROJECT THE WORLD TRADE CENTER | TITLE GIRDER CONNECTION DETAIL | DATE 6-7-68

REVISIONS

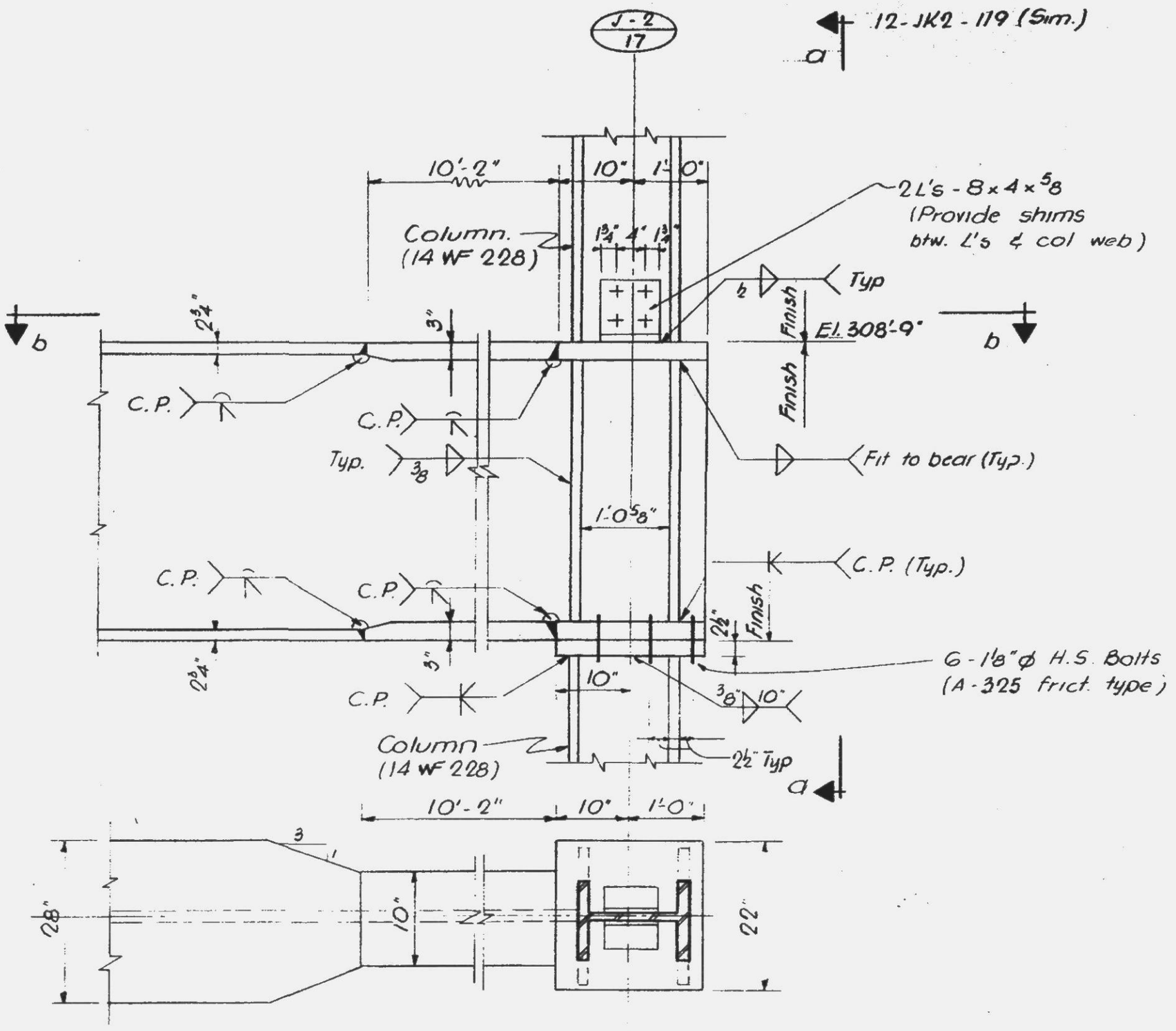

Section b-b

LICENSED PROFESSIONAL ENGINEER
LESLIE E. ROBERTSON
No. 34360
UNIVERSITY OF THE STATE OF NEW YORK

12-JK2-119A

SKILLING - HELLE - CHRISTIANSEN - ROBERTSON Structural & Civil Engineers

PROJECT THE WORLD TRADE CENTER | TITLE GIRDER CONNECTION DETAILS | DATE 5-1-68

REVISIONS
7-19-68
1-3-69

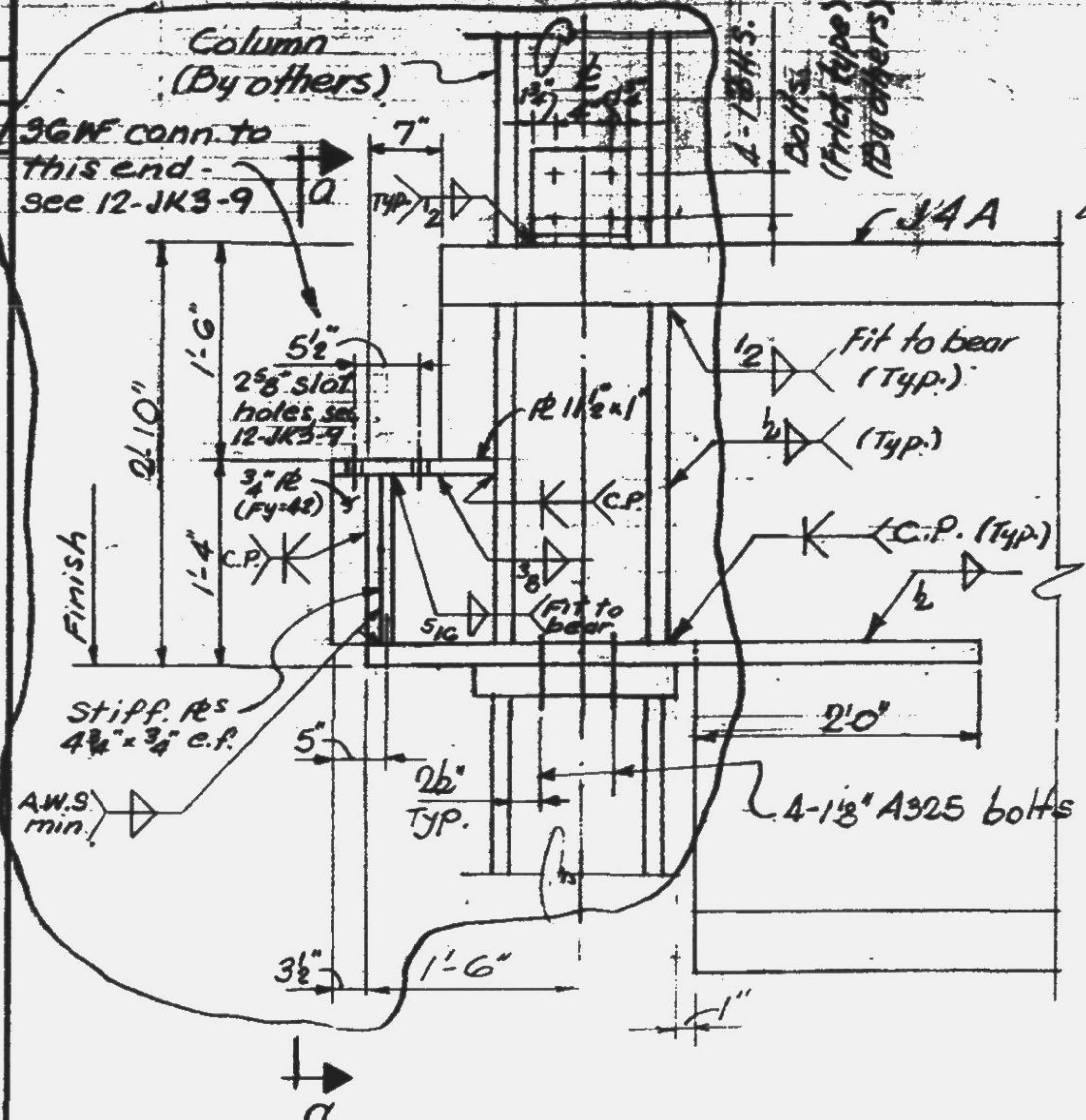

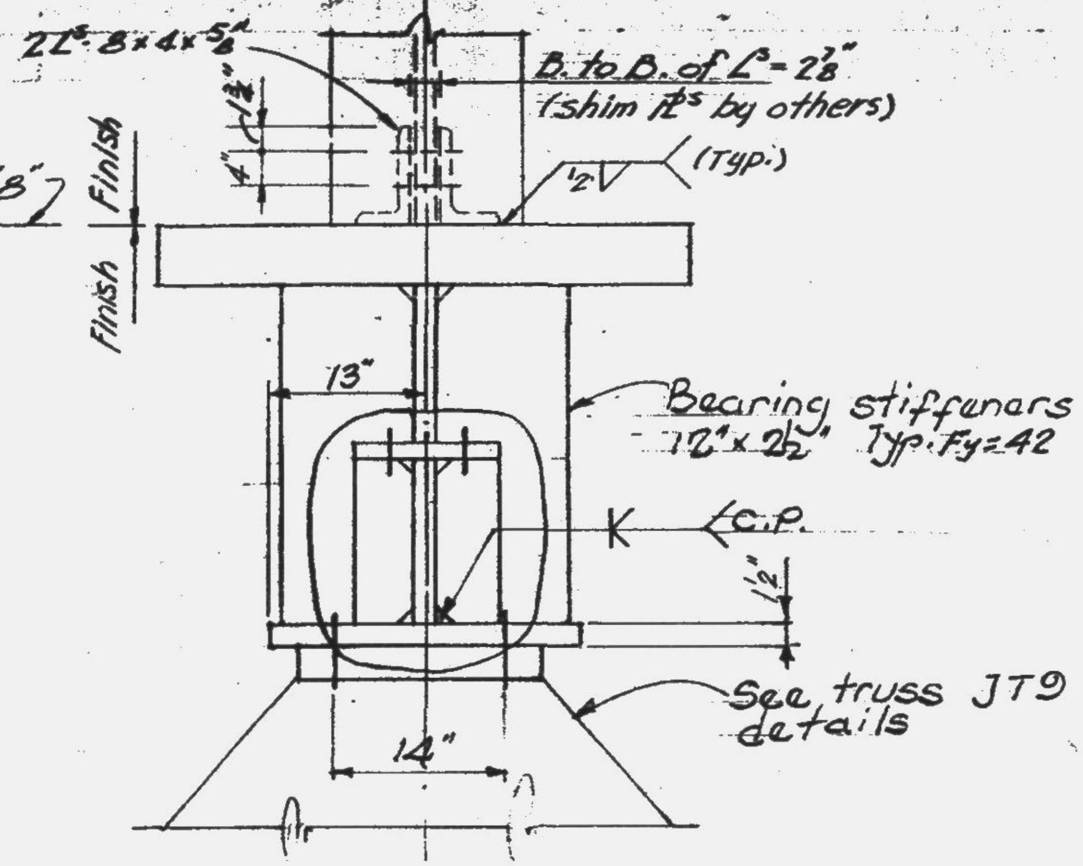

Section a-a

LICENSED PROFESSIONAL ENGINEER LESLIE E. ROBERTSON No. 34360 UNIVERSITY OF THE STATE OF NEW YORK

DRAWN S.C.
REVIEWED E.L.

12-JK2-120

SKILLING - HELLE - CHRISTIANSEN - ROBERTSON — STEEL & CIVIL Engineers

PROJECT THE WORLD TRADE CENTER | TITLE GIRDER CONNECTION DETAIL | DATE 5-1-68

REVISIONS
7-19-68
8-30-68
11-5-68

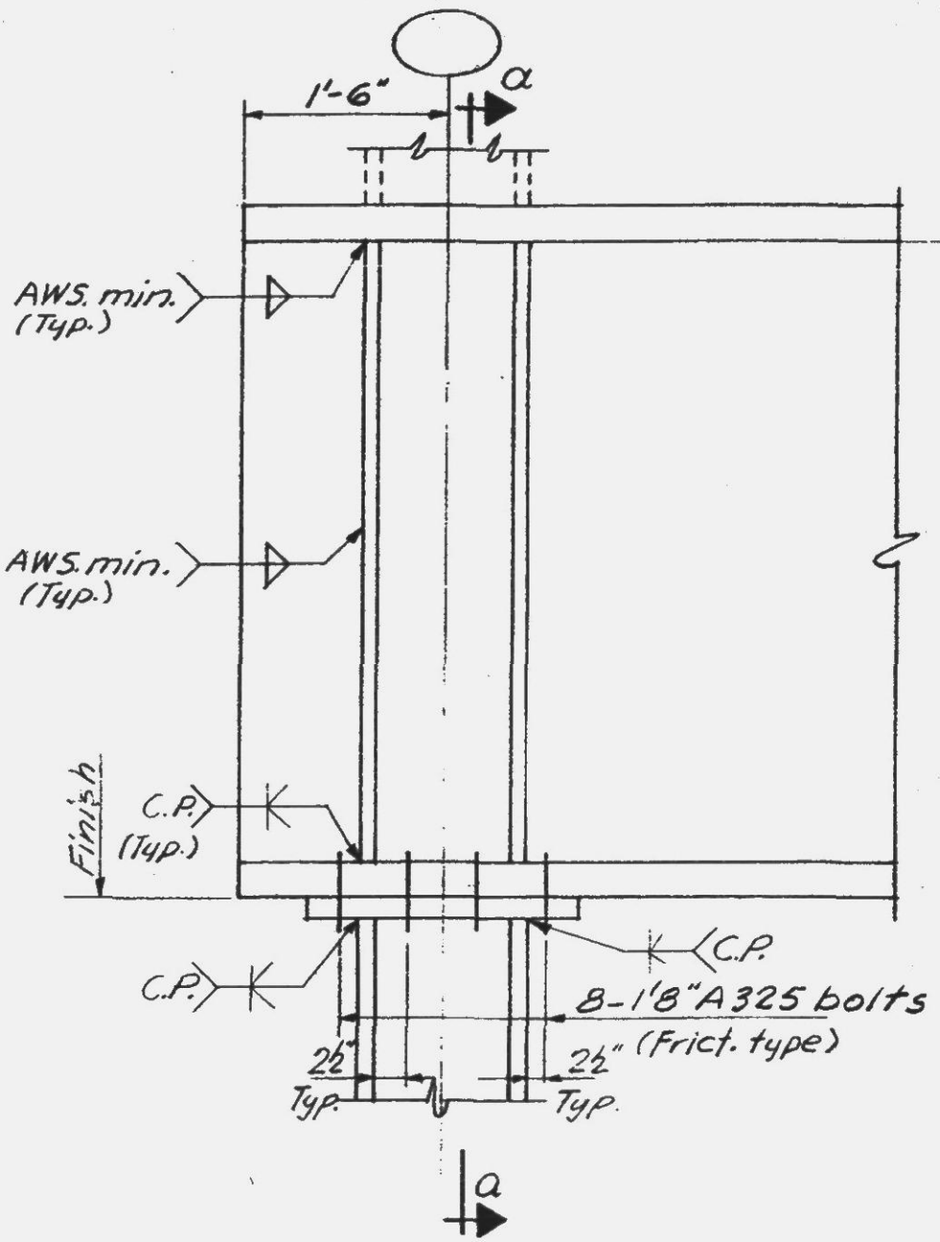

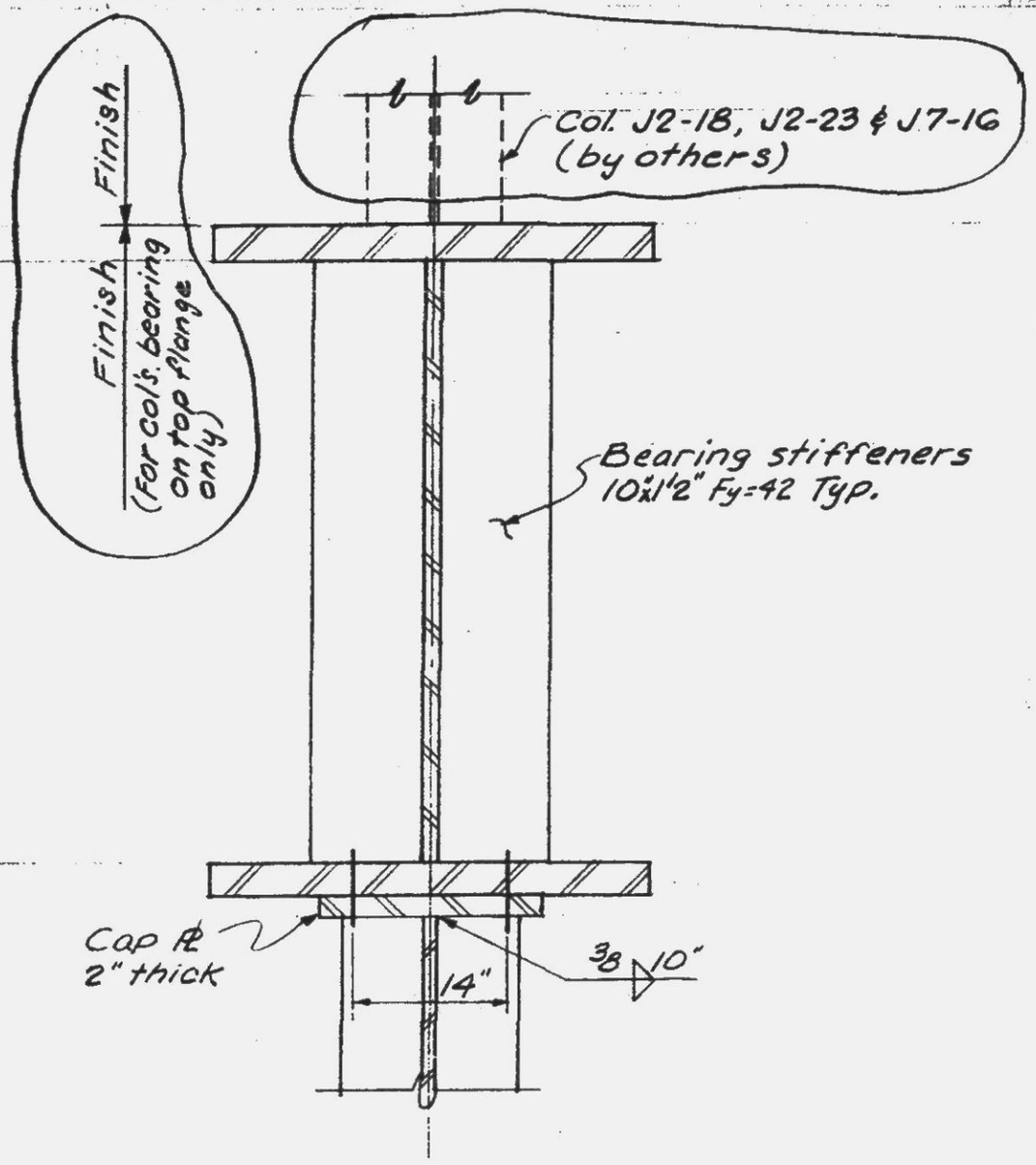

Section a-a

LICENSED PROFESSIONAL ENGINEER
LESLIE E. ROBERTSON
No. 34360
THE STATE OF NEW YORK

12-JK2-121

SKILLING, HELLE, CHRISTIANSEN, ROBERTSON · Structural & Civil Engineers

PROJECT THE WORLD TRADE CENTER | TITLE GIRDER CONNECTION DETAIL | DATE 3-17-69

REVISIONS

4-18-69

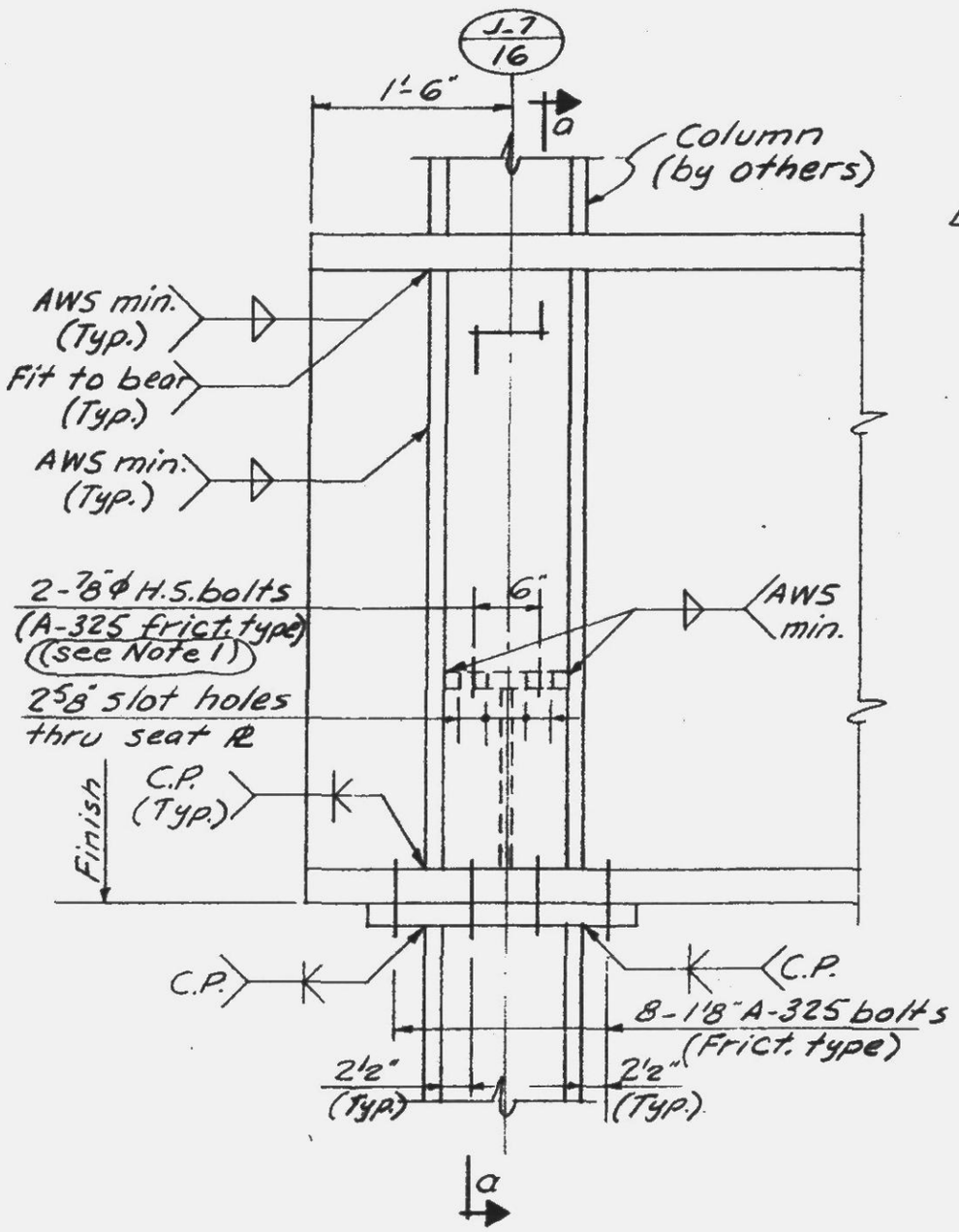

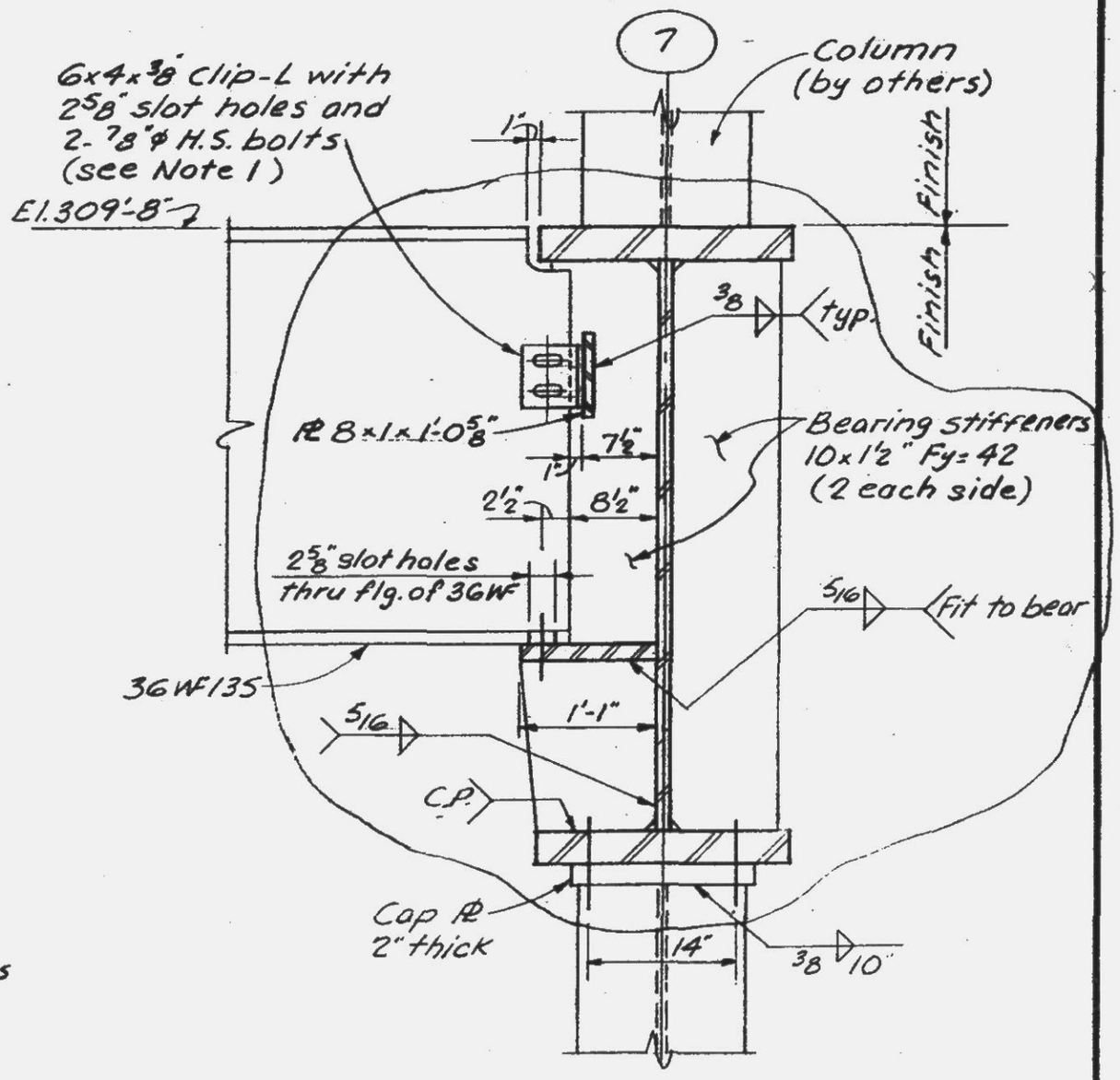

Section a-a

Notes:

1. Tighten all bolts only after pouring concrete to the strip of Const. Jt. as shown on plan.

LICENSED PROFESSIONAL ENGINEER
LESLIE E. ROBERTSON
No. 34360
UNIVERSITY OF THE STATE OF NEW YORK

DESIGNED

DRAWN
A.L. FRANQUI

REVIEWED
E.L.

12-JK2-121A

LESLIE E. ROBERTSON - CHRISTIANSEN - ROBERTSON — Structural & Civil Engineers

PROJECT: WORLD TRADE CENTER — GIRDER CONNECTION DETAIL — DATE: 5-1-68

REVISIONS
7-19-68
9-4-68
12-3-68

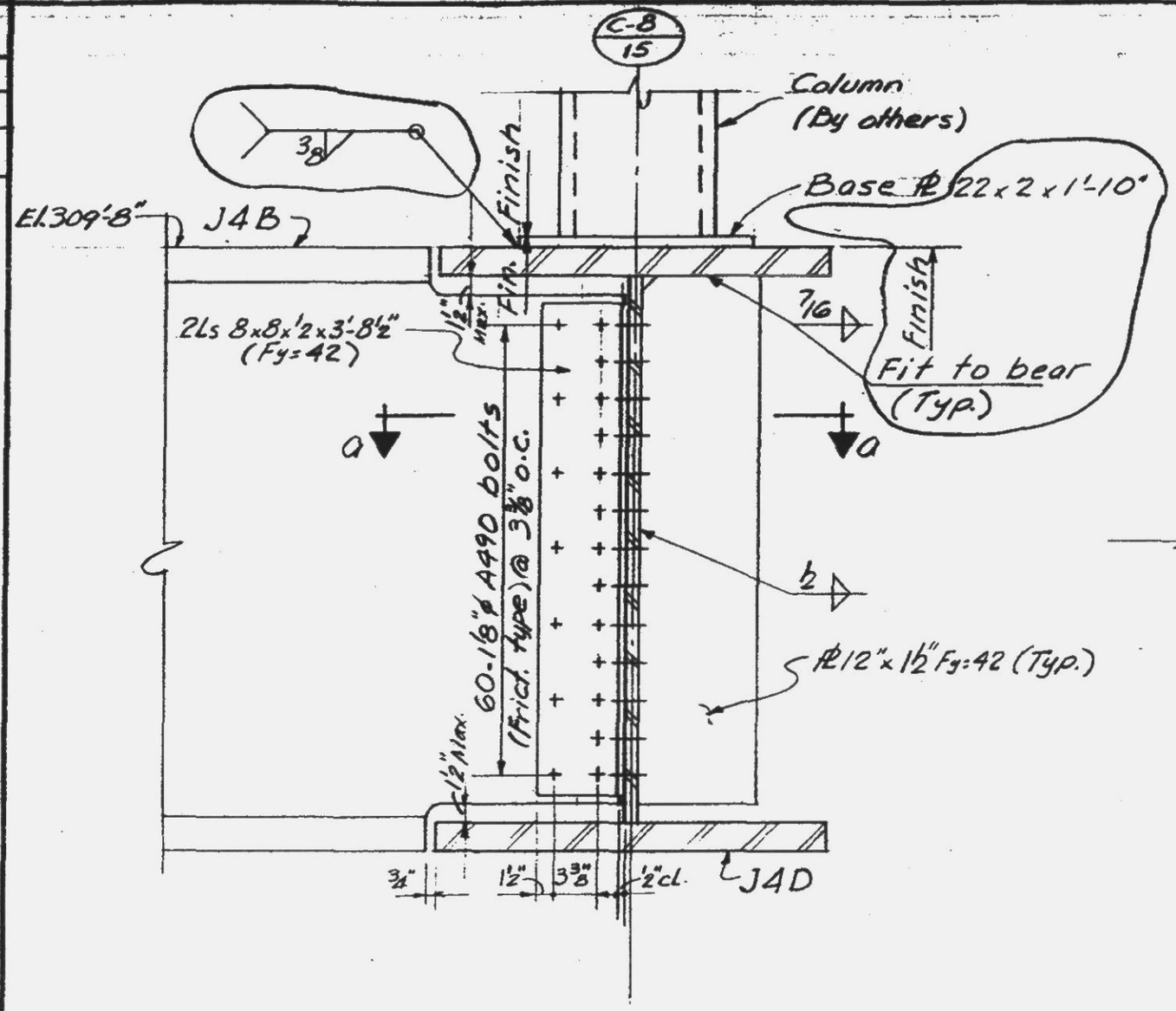

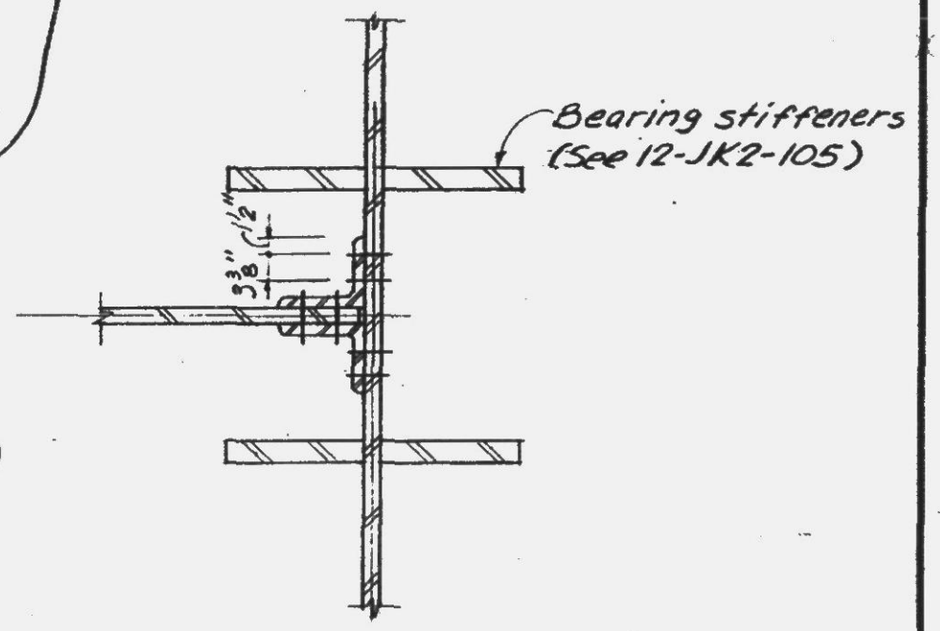

Section a-a

Note:
Some bearing stiffeners omitted from elevation for clarity. see Section a-a.

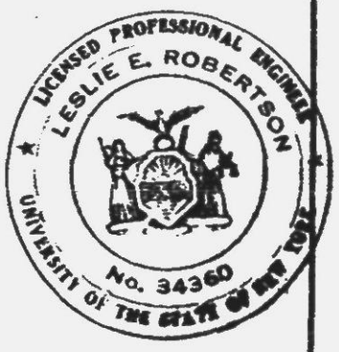

12-JK2-122

SKILLING - HELLE - CHRISTIANSEN - ROBERTSON — Structural & Civil Engineers

PROJECT: THE WORLD TRADE CENTER | TITLE: GIRDER CONNECTION DETAIL | DATE: 5-1-68

REVISIONS
6-28-68
7-19-68

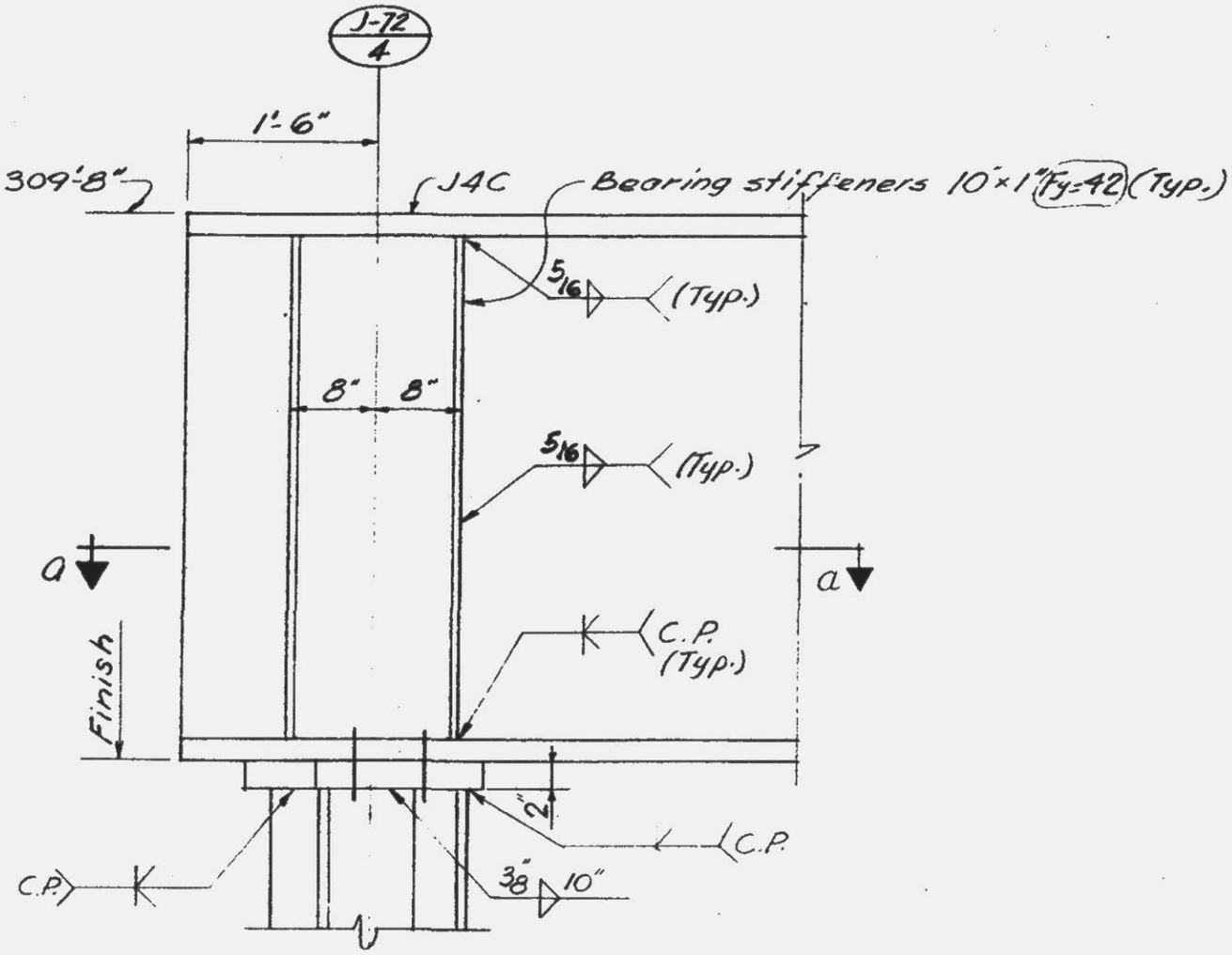

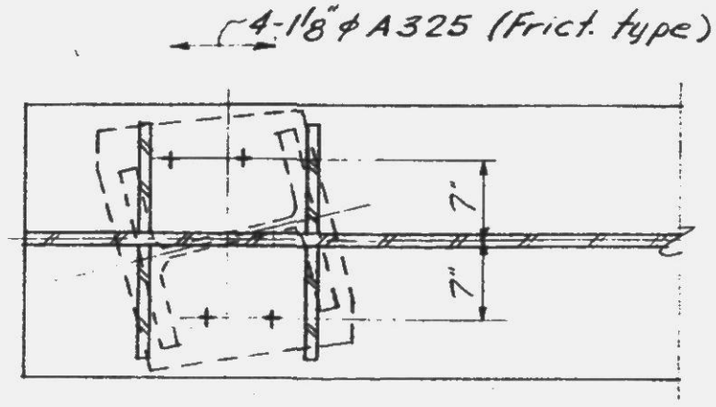

Section a-a

Note:
This detail similar to detail 12-JK2-128 except bolts must match skewed column as shown in section a-a

LICENSED PROFESSIONAL ENGINEER
LESLIE E. ROBERTSON
No. 34360
UNIVERSITY OF THE STATE OF NEW YORK

12-JK2-123

SKILLING - HELLE - CHRISTIANSEN - ROBERTSON — Structural & Civil Engineers

PROJECT THE WORLD TRADE CENTER | TITLE GIRDER CONNECTION DETAIL | DATE 5-1-68

REVISIONS

7-19-68

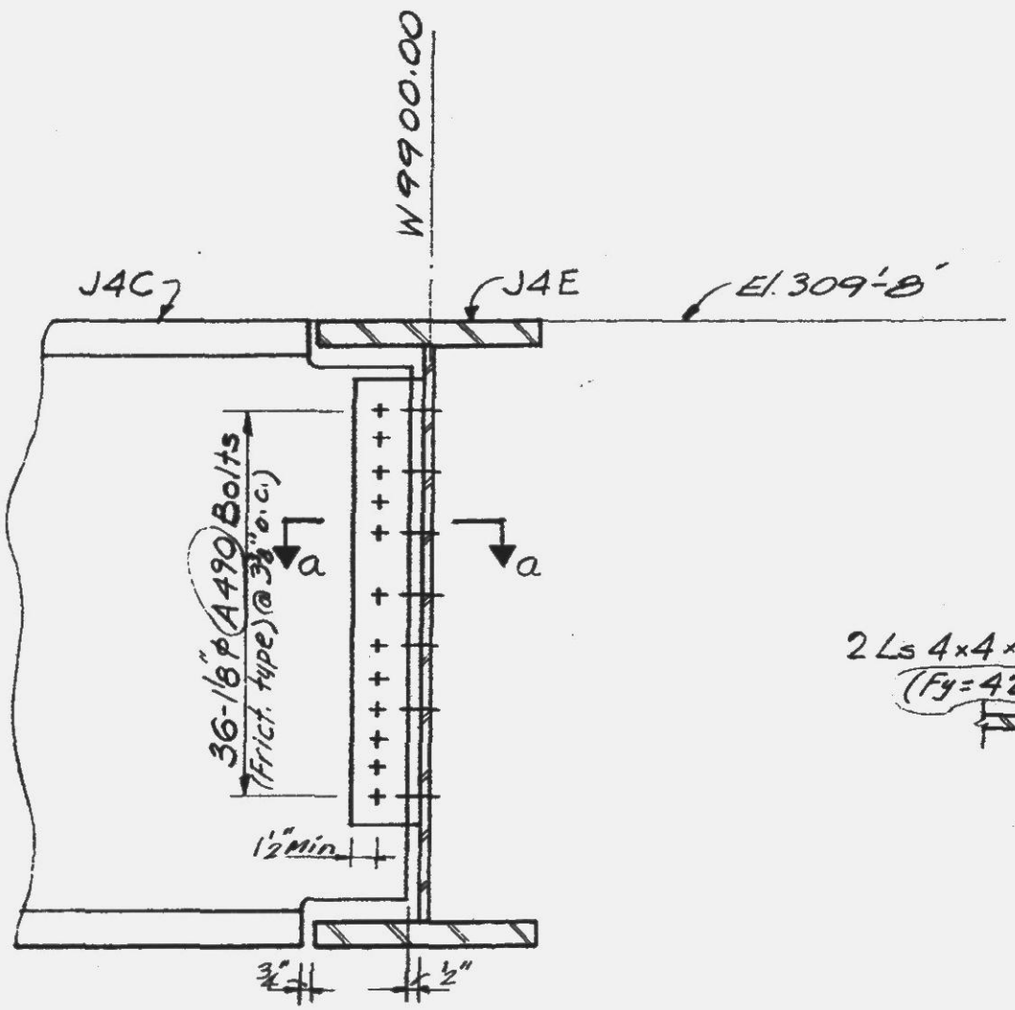

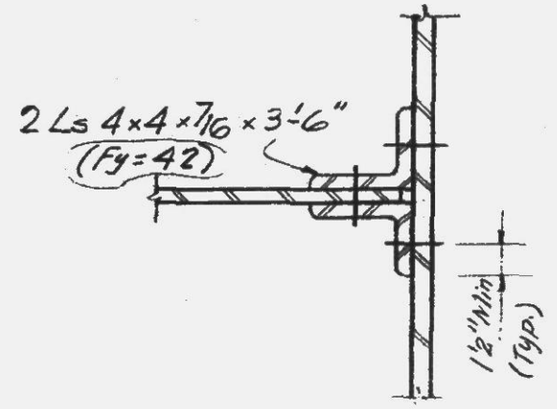

Section a-a

LICENSED PROFESSIONAL ENGINEER
LESLIE E. ROBERTSON
No. 34360
UNIVERSITY OF THE STATE OF NEW YORK

12-JK2-124

SKILLING - HELLE - CHRISTIANSEN - ROBERTSON Structural & Civil Engineers

PROJECT THE WORLD TRADE CENTER | TITLE GIRDER CONNECTION DETAIL | DATE 5-1-68

REVISIONS

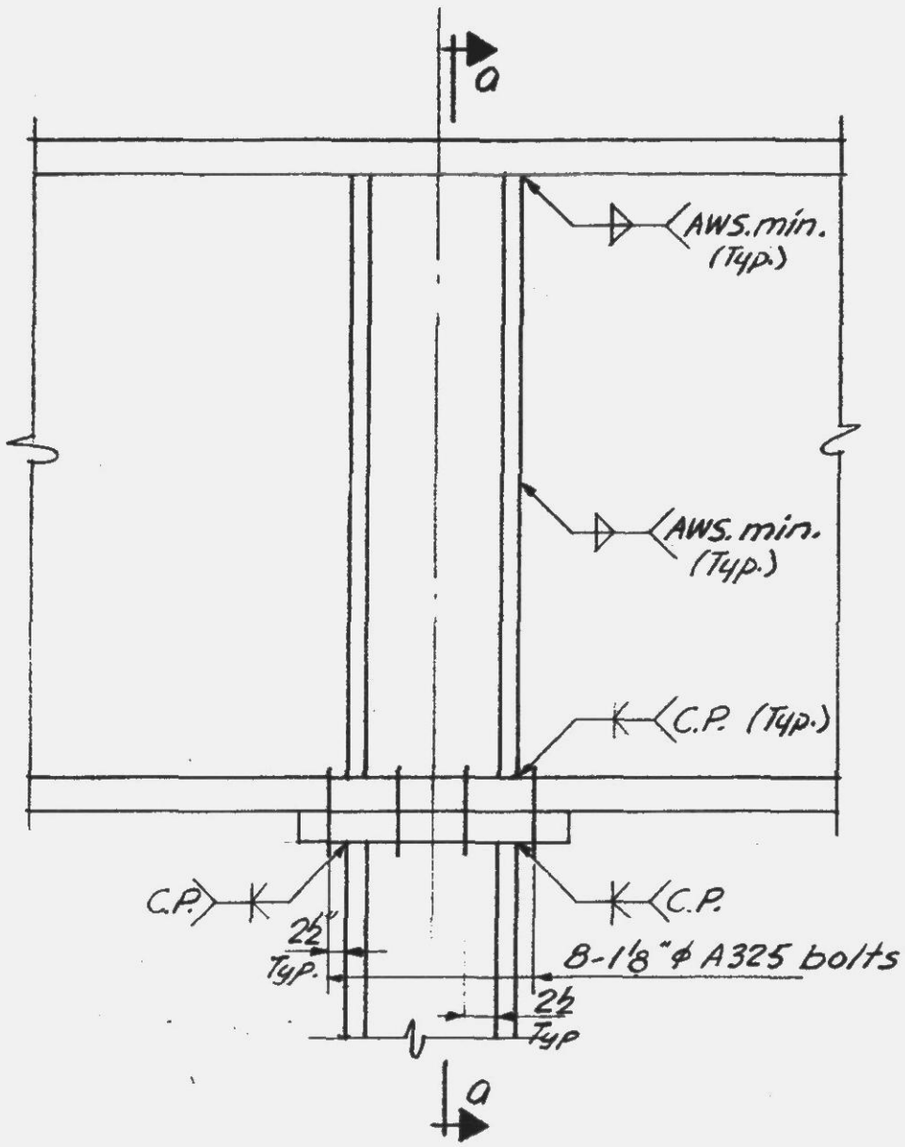

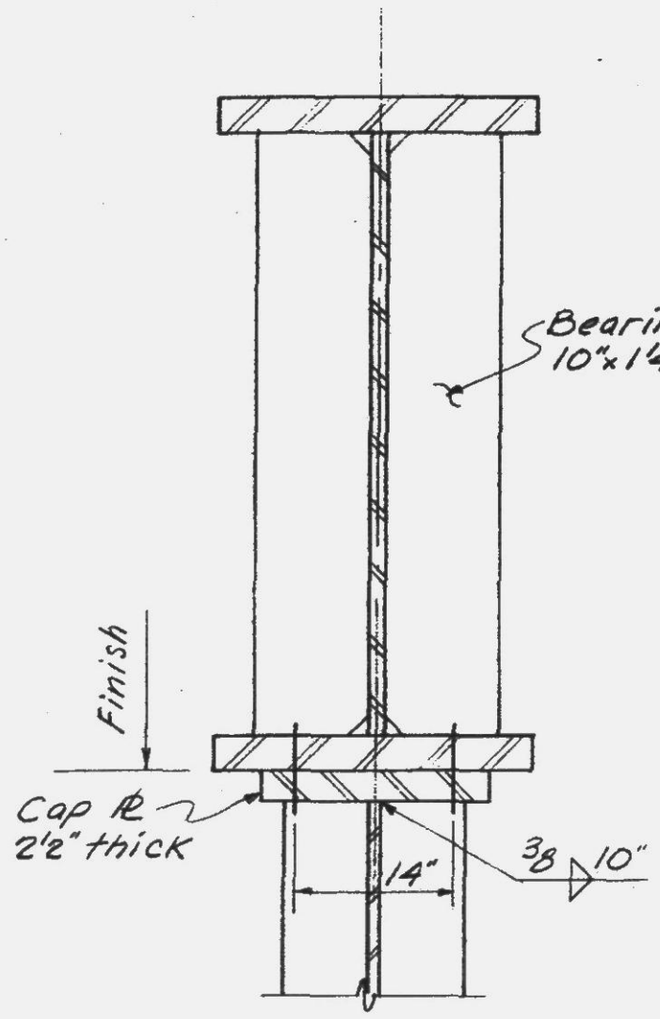

Section a-a

LICENSED PROFESSIONAL ENGINEER
LESLIE E. ROBERTSON
No. 34360
STATE OF NEW YORK

12-JK2-125

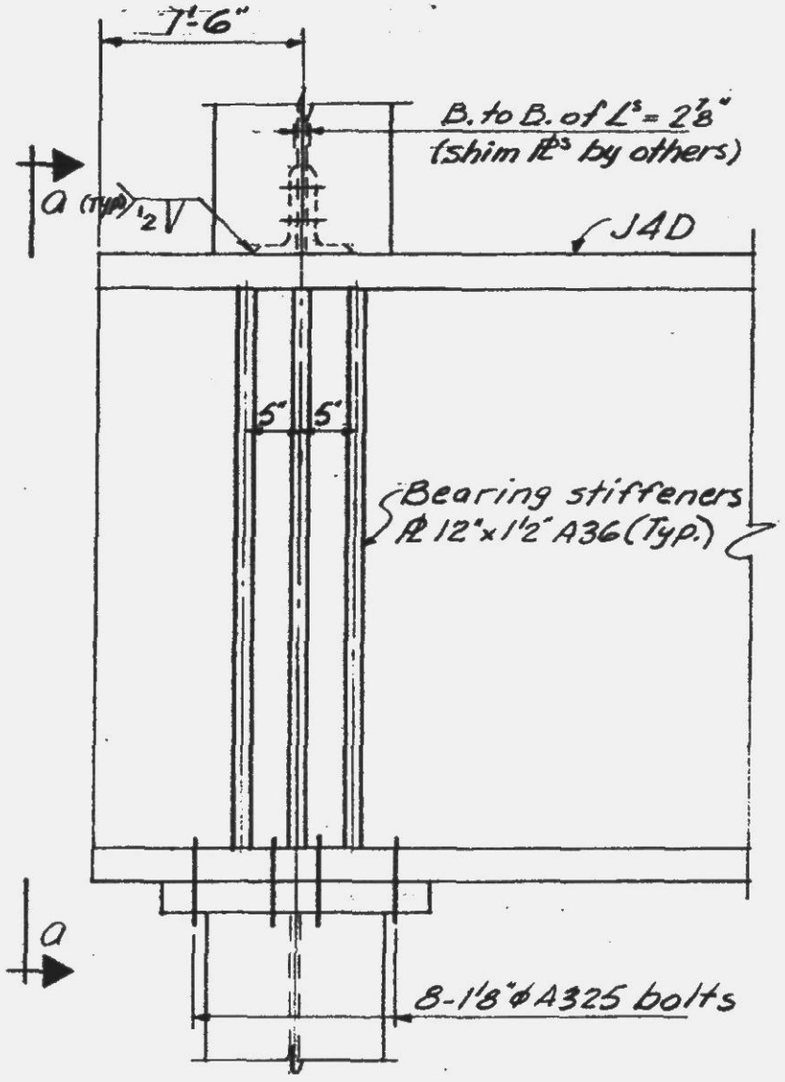

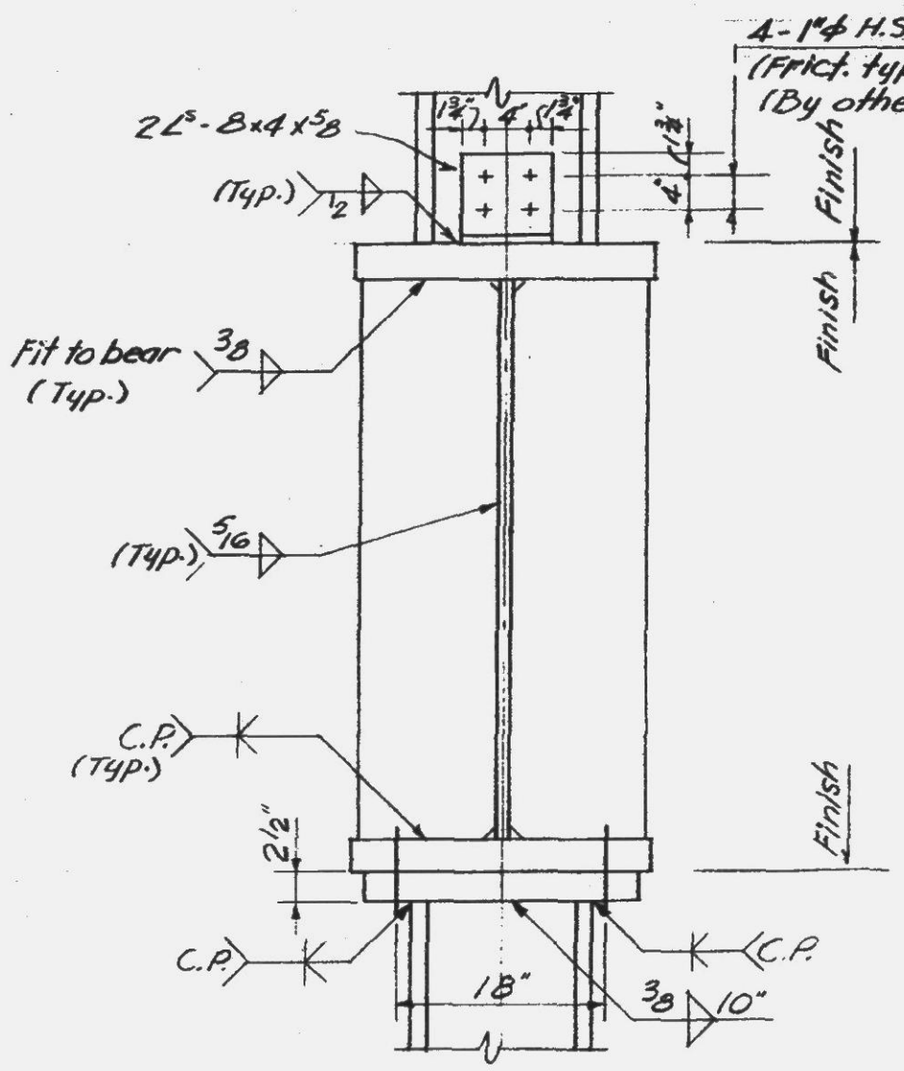

Section a-a

LOUIS E. ROBERTSON
REGISTERED PROFESSIONAL ENGINEER
No. 24960
STATE OF NEW YORK

12-JK2-126

SKILLING, HELLE, CHRISTIANSEN, ROBERTSON — Structural & Civil Engineers

PROJECT: THE WORLD TRADE CENTER | TITLE: GIRDER CONNECTION DETAIL | DATE: 1-20-69

REVISIONS

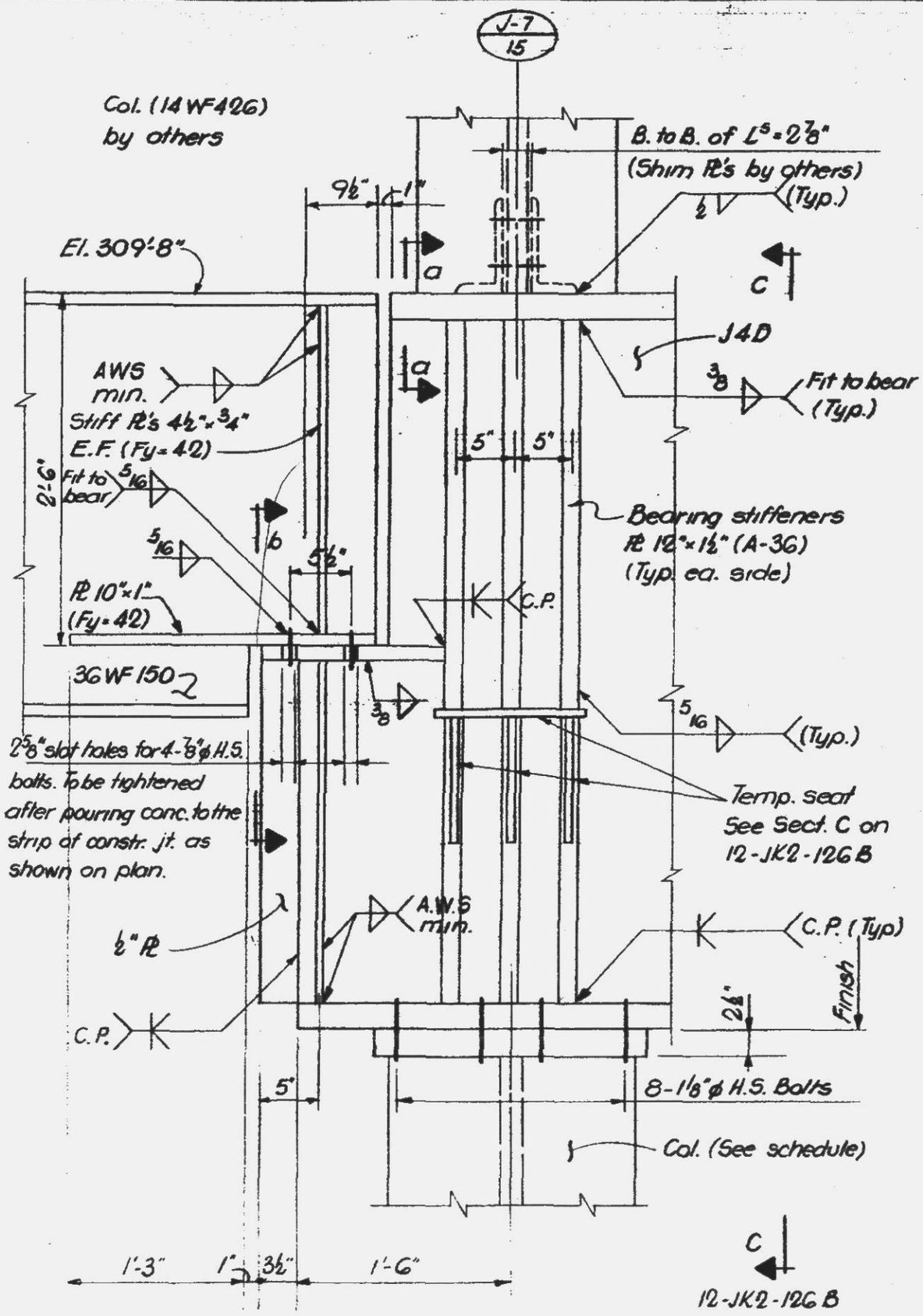

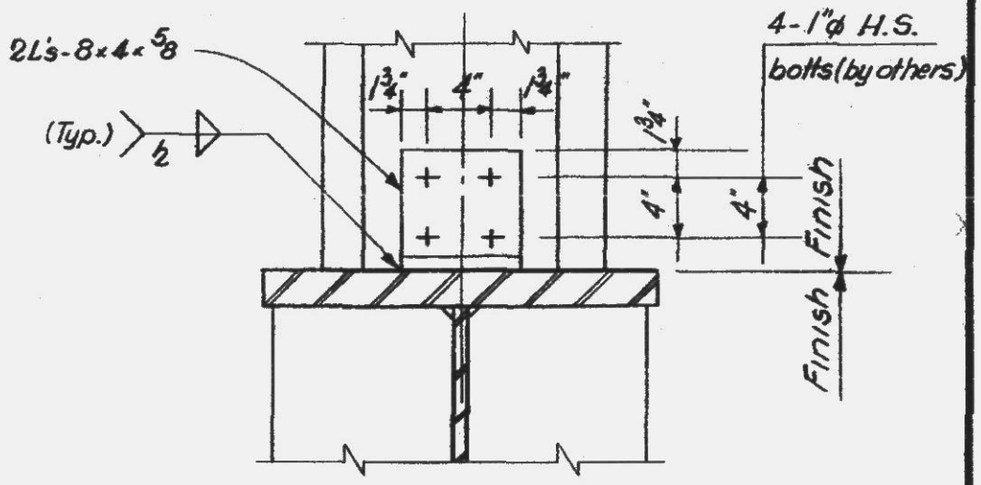

Section a-a

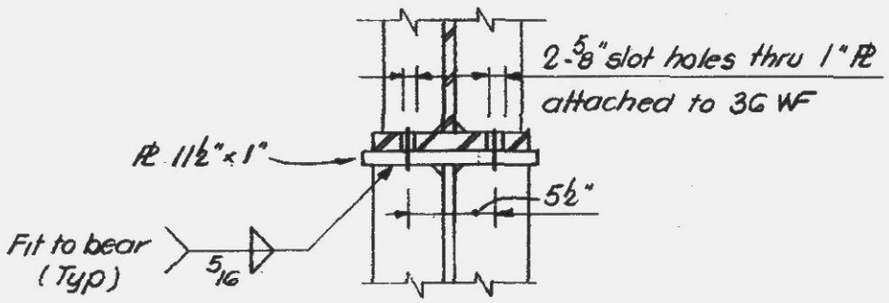

Section b-b

Notes:

1. All H.S. bolts to be A-325 friction type, except as noted
2. All welds to be E 70xx.
3. Provide washers 2½ x 5/8 (square or round) with fy = 50 ksi for all bolts over slot holes.

LICENSED PROFESSIONAL ENGINEER — LESLIE E. ROBERTSON — No. 34360 — UNIVERSITY OF THE STATE OF NEW YORK

DESIGNED

DRAWN
G.T.H.

REVIEWED
E.L.

12-JK2-126A

SKILLING, HELLE, CHRISTIANSEN, ROBERTSON — Structural & Civil Engineers

PROJECT THE WORLD TRADE CENTER | TITLE GIRDER CONNECTION DETAIL | DATE 1-20-69

REVISIONS

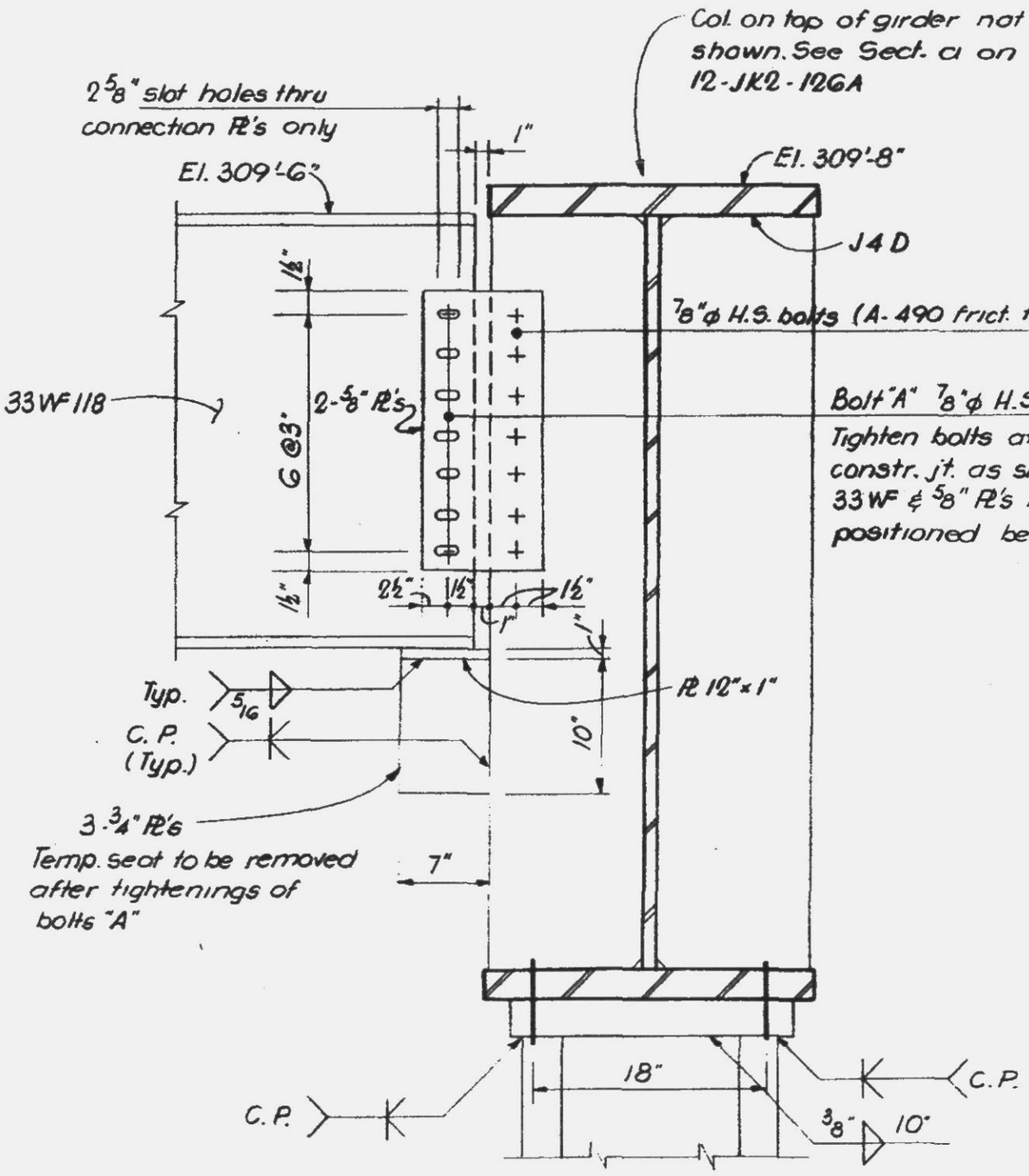

Section c-c

Notes:

1. All welds to be E70xx.
2. Provide washers 2½x5/8 (square or round) with fy=50ksi for all bolts over slot. holes.

LICENSED PROFESSIONAL ENGINEER — LESLIE E. ROBERTSON — No. 34360 — UNIVERSITY OF THE STATE OF NEW YORK

DESIGNED

DRAWN G.T.H.

REVIEWED E.L.

12-JK2-126B

SKILLING, HELLE, CHRISTIANSEN, ROBERTSON — Structural & Civil Engineers

PROJECT: [illegible] WORLD TRADE CENTER

TITLE: GIRDER CONNECTION DETAIL

DATE: 5-1-68

REVISIONS

7-19-68

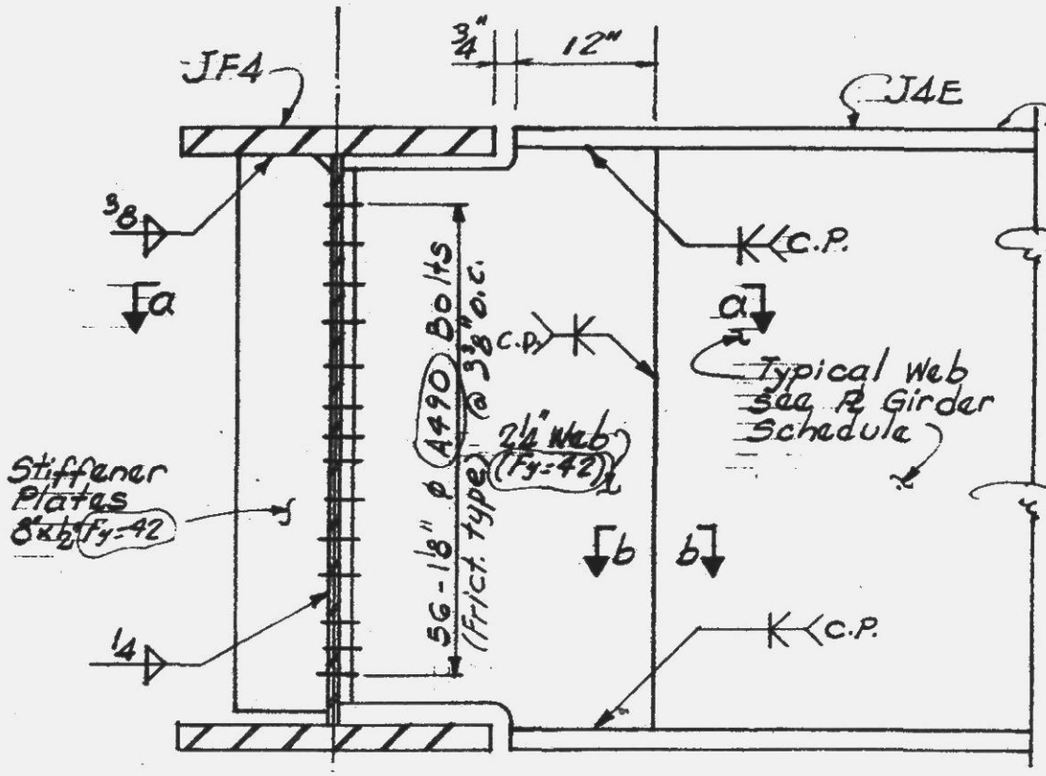

Note:
Some stiffeners omitted from elevation for clarity, see section a-a

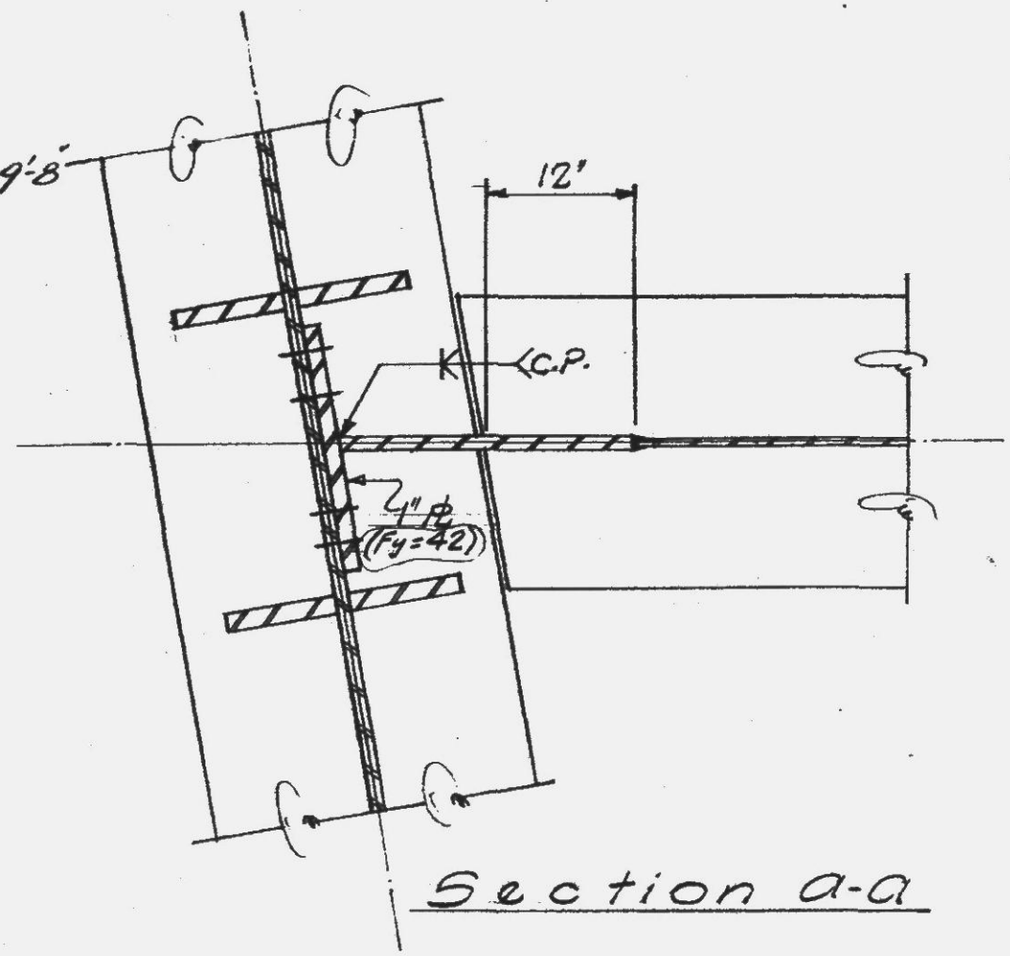

Section a-a

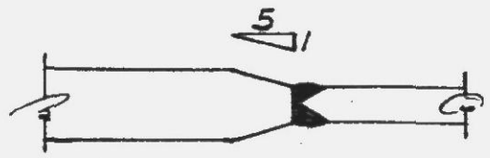

Section b-b

LICENSED PROFESSIONAL ENGINEER — LESLIE E. ROBERTSON — No. 34360 — STATE OF NEW YORK

12-JK2-127

SKILLING, HELLE, CHRISTIANSEN, ROBERTSON — Structural & Civil Engineers

PROJECT: ONE WORLD TRADE CENTER | TITLE: GIRDER CONNECTION DETAIL | DATE: 3-1-68

REVISIONS
6-28-68
7-19-68

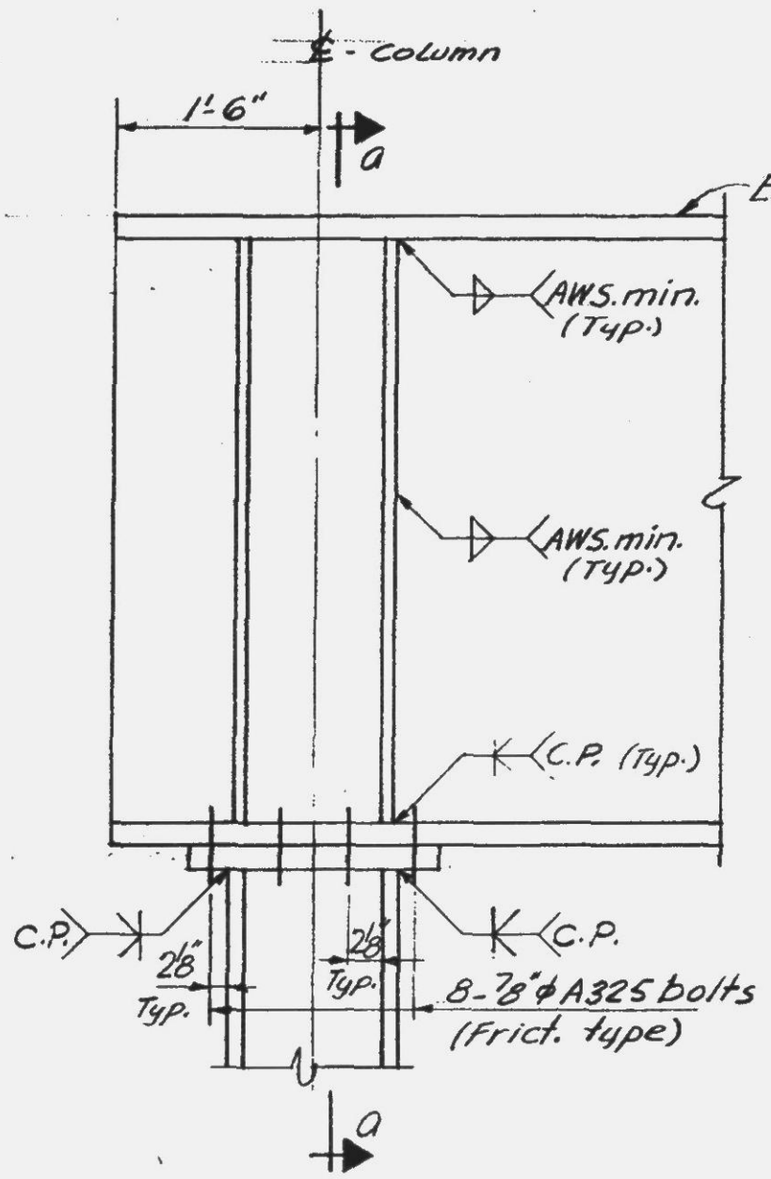

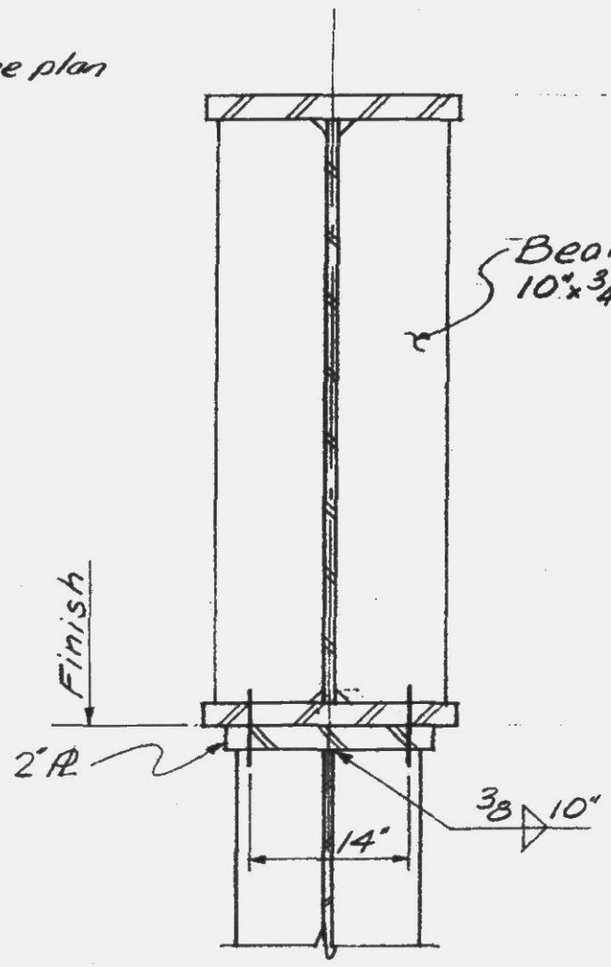

Section a-a

LICENSED PROFESSIONAL ENGINEER — LESLIE E. ROBERTSON — No. 34360 — LICENSED BY THE STATE OF NEW YORK

12-JK2-128

SKILLING, HELLE, CHRISTIANSEN, ROBERTSON — Structural & Civil Engineers

PROJECT THE WORLD TRADE CENTER | TITLE GIRDER CONNECTION DETAIL | DATE 1-20-69

REVISIONS

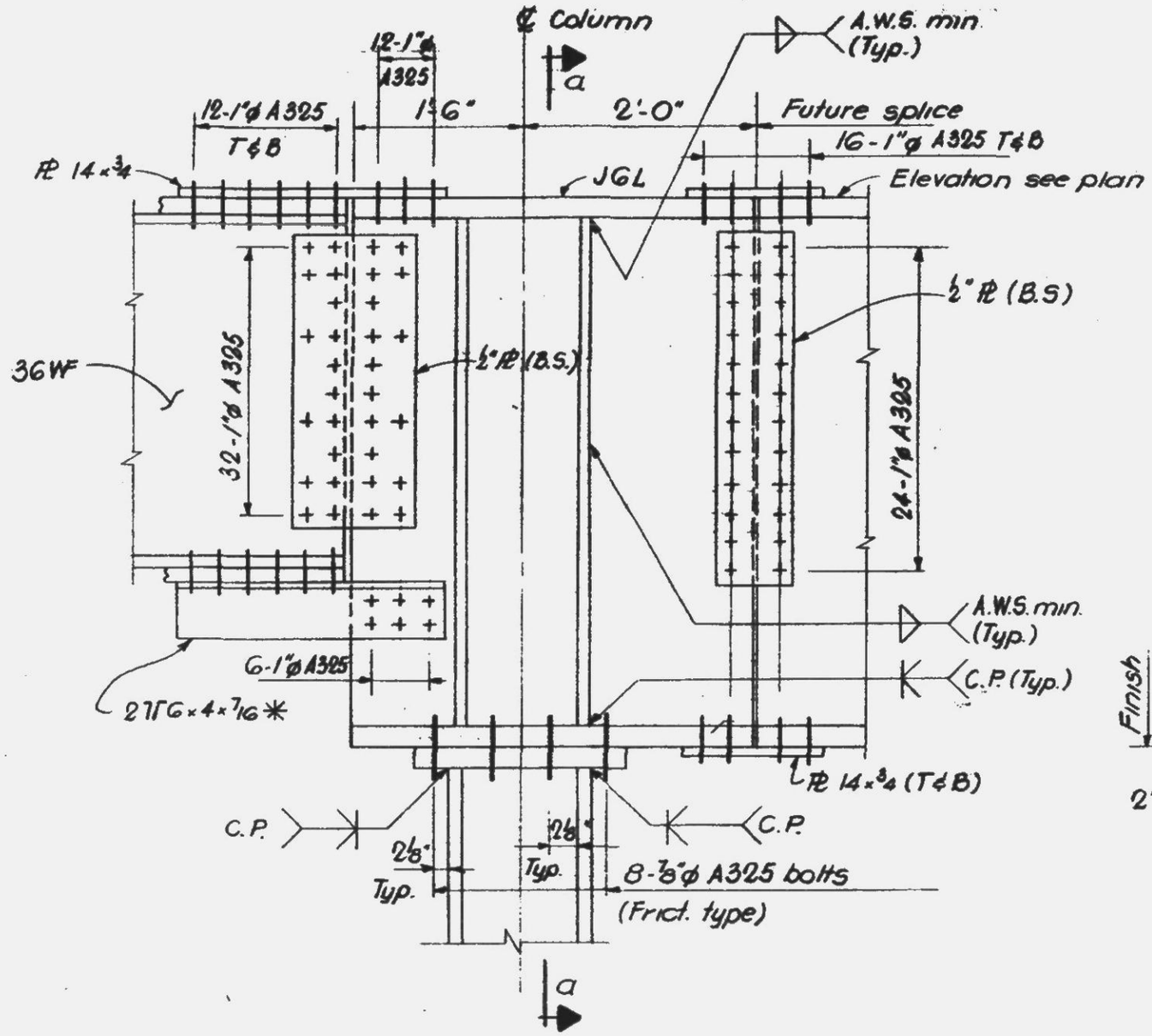

* Remove 2 ⌐ 6×4 after "future splice" has been completed

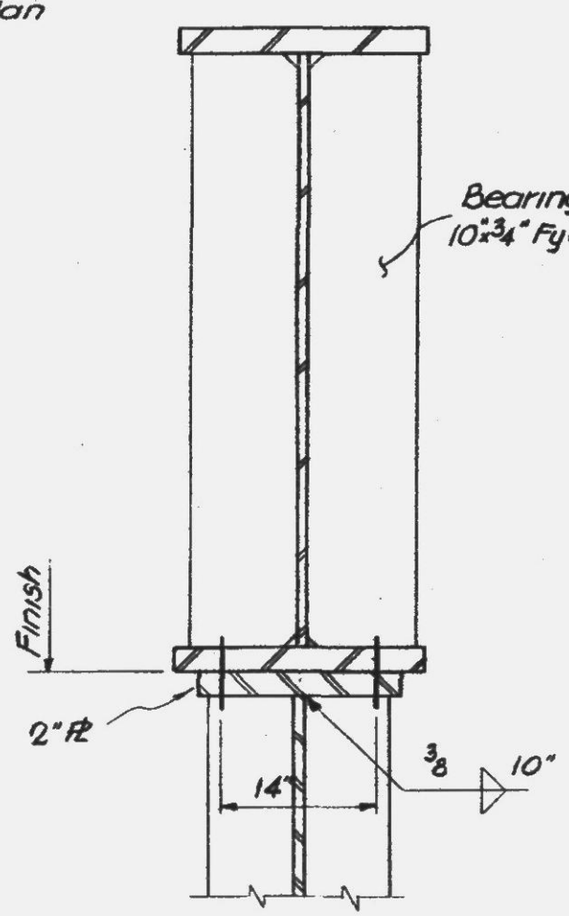

Section a-a

LICENSED PROFESSIONAL ENGINEER — LESLIE E. ROBERTSON — No. 34360 — UNIVERSITY OF THE STATE OF NEW YORK

DESIGNED

DRAWN G.T.H.

REVIEWED E.L.

12-JK2-128 A

SKILLING - HELLE - CHRISTIANSEN - ROBERTSON — STRUCTURAL STEEL ENGINEERS

PROJECT: THE WORLD TRADE CENTER | TITLE: GIRDER CONNECTION DETAIL | DATE: 5-1-68

REVISIONS
6-28-68
7-19-68

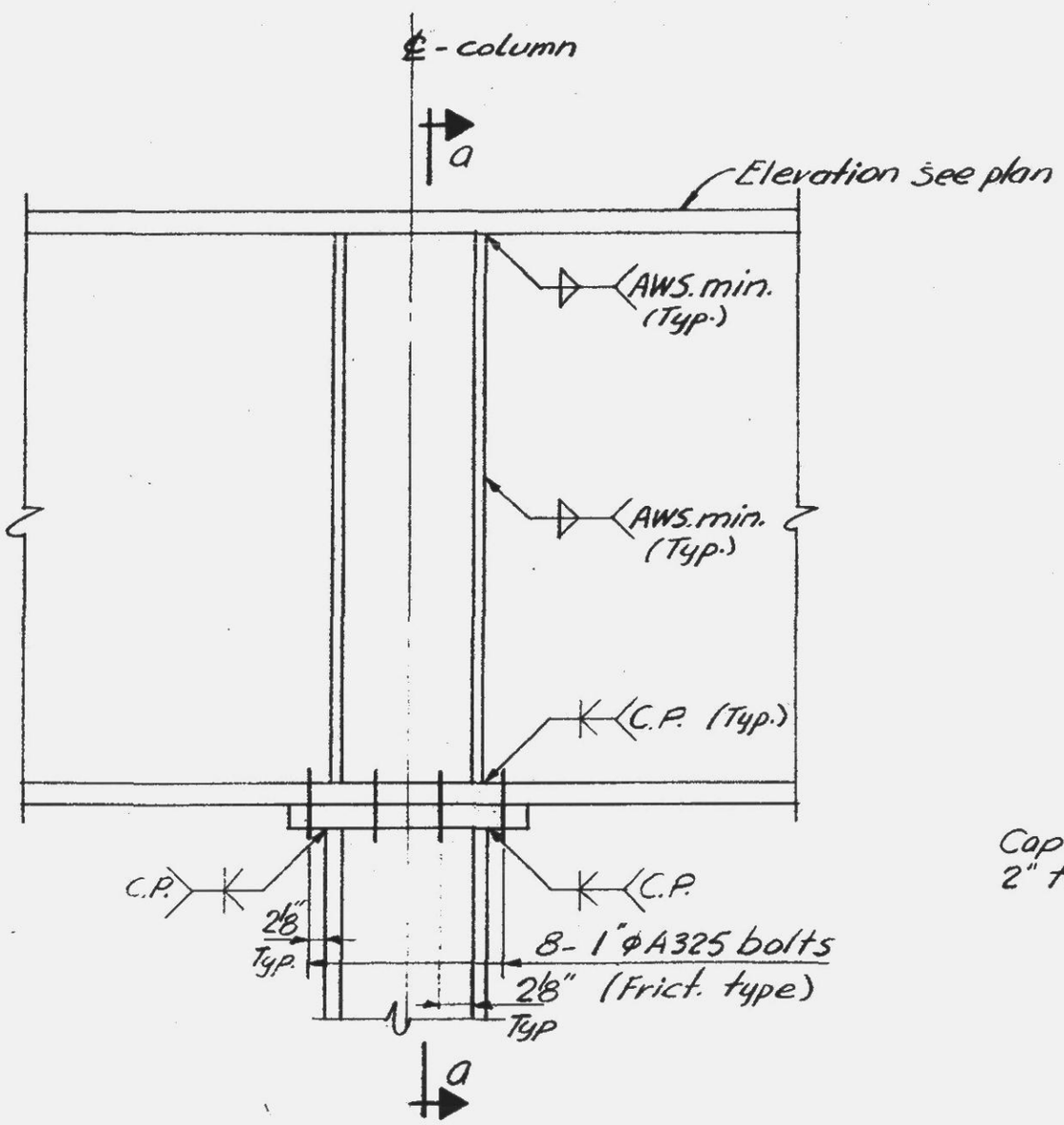

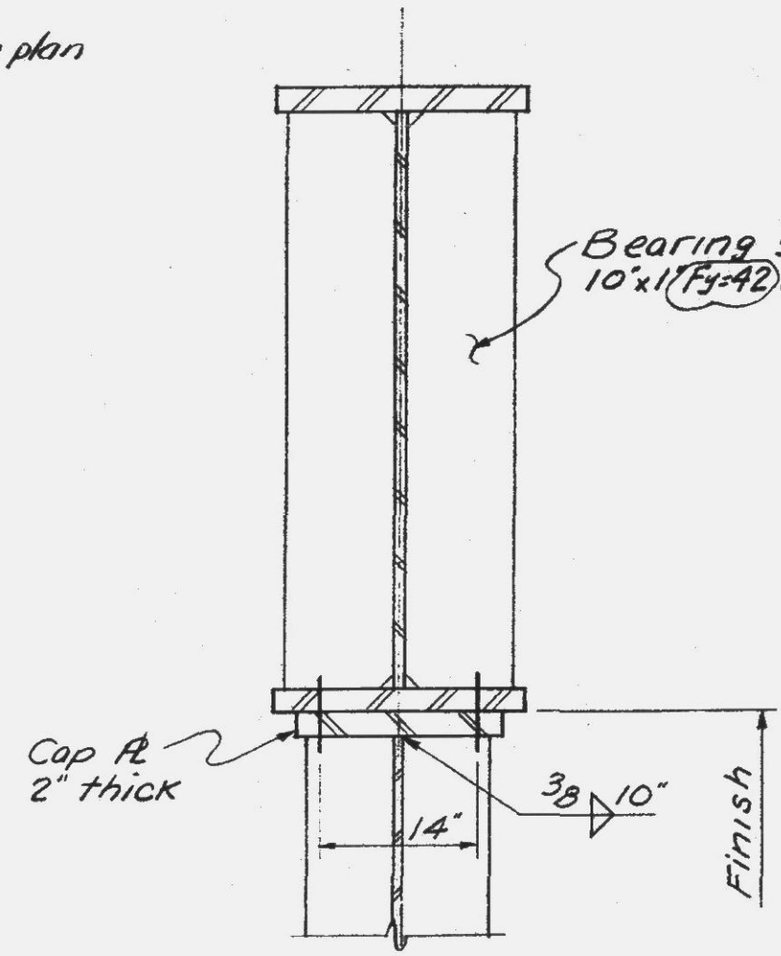

Section a-a

LICENSED PROFESSIONAL ENGINEER
LESLIE E. ROBERTSON
No. 34360
UNIVERSITY OF THE STATE OF NEW YORK

12-JK2-129

SKILLING - HELLE - CHRISTIANSEN - ROBERTSON Structural & Civil Engineers

PROJECT THE WORLD TRADE CENTER | TITLE GIRDER CONNECTION DETAIL | DATE 5-1-68

REVISIONS

6-7-68

6-28-68

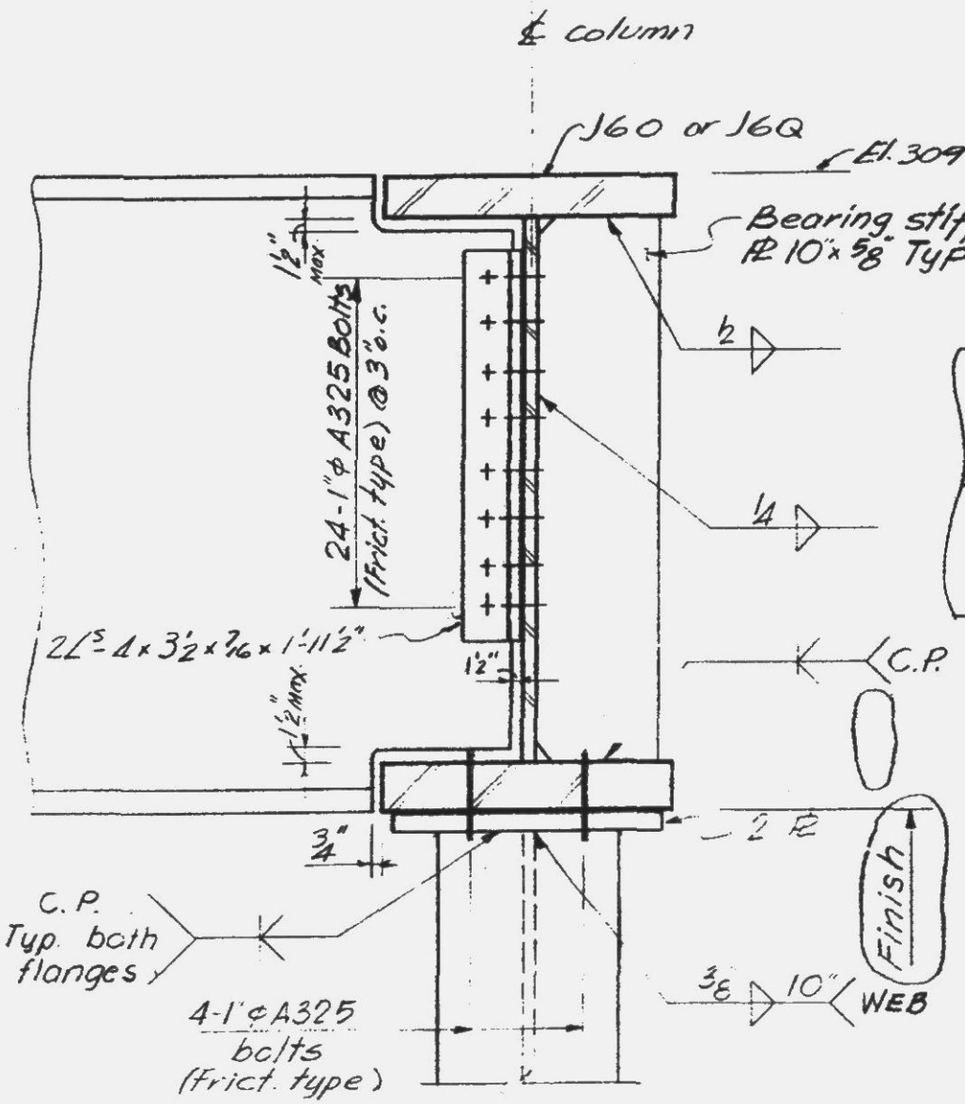

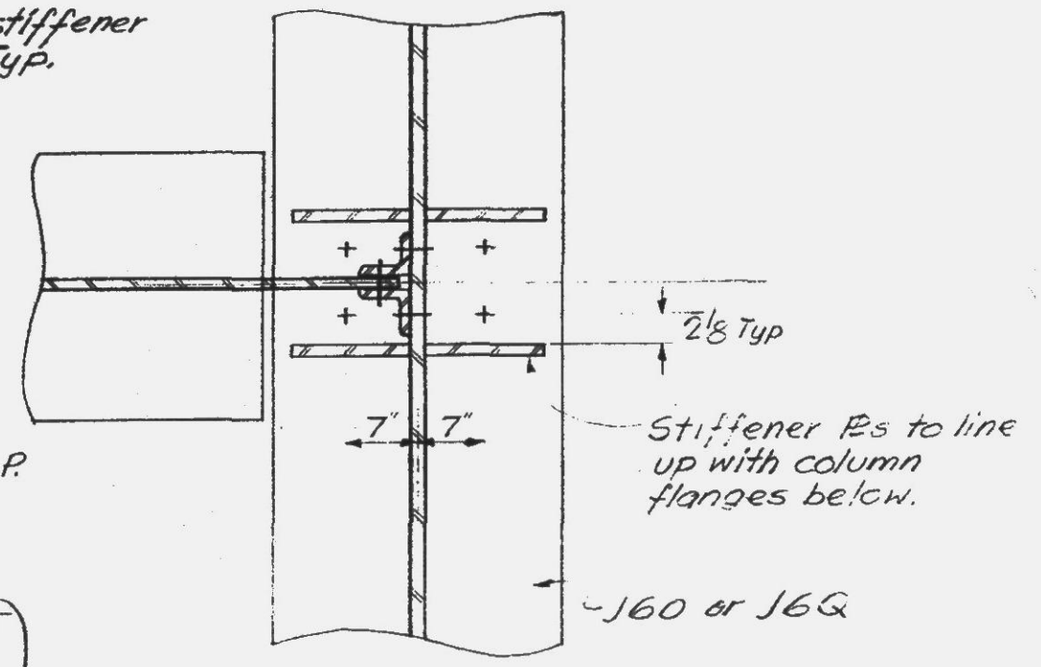

Section a-a

NOTE: Some stiffeners omitted from elevation for clarity. See Sect. a-a

LESLIE E. ROBERTSON
No. 34360
UNIVERSITY OF THE STATE OF NEW YORK

12-JAN-130

SKILLING - HELLE - CHRISTIANSEN - ROBERTSON Structural & Civil Engineers

PROJECT THE WORLD TRADE CENTER | TITLE GIRDER CONNECTION DETAIL | DATE 5-1-68

REVISIONS

7-19-68

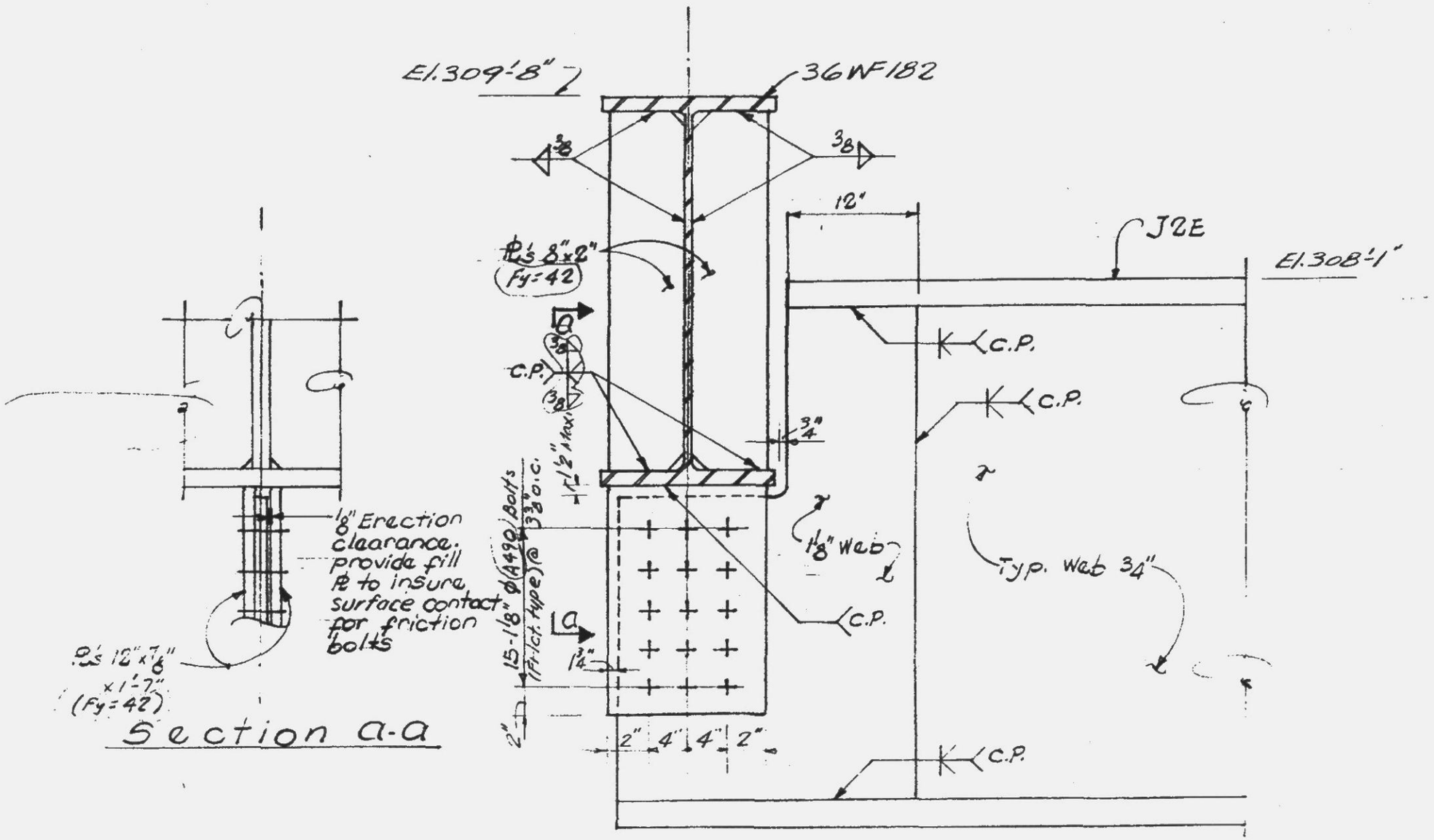

Section a-a

LICENSED PROFESSIONAL ENGINEER
LESLIE E. ROBERTSON
No. 34360
UNIVERSITY OF THE STATE OF NL

12-JK2-131

SKILLING - HELLE - CHRISTIANSEN - ROBERTSON Structural & Civil Engineers

PROJECT THE WORLD TRADE CENTER | TITLE GIRDER CONNECTION DETAIL | DATE 5-1-68

REVISIONS
7-19-68
1-8-69

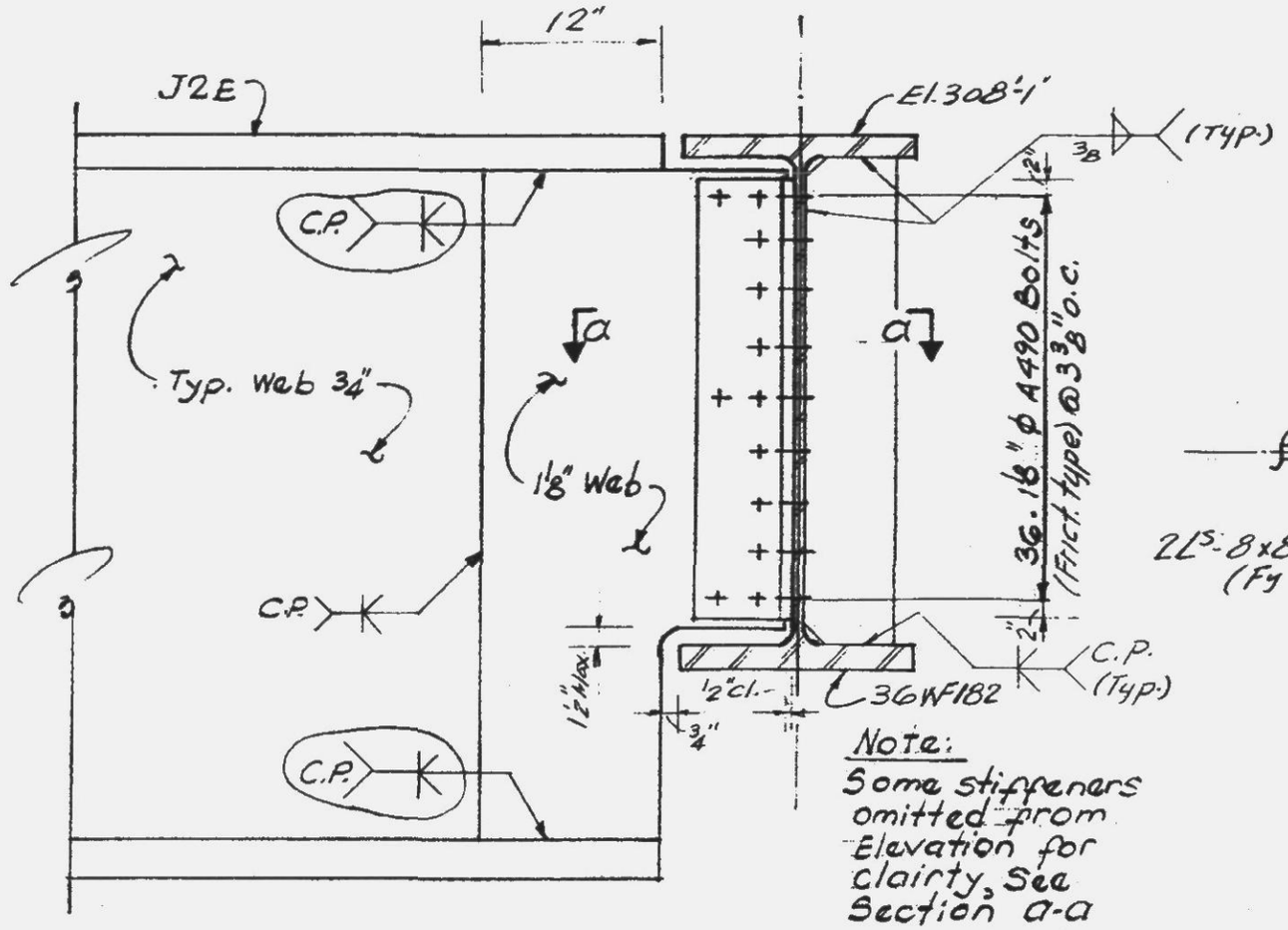

Note:
Some stiffeners omitted from Elevation for clairty, See Section a-a

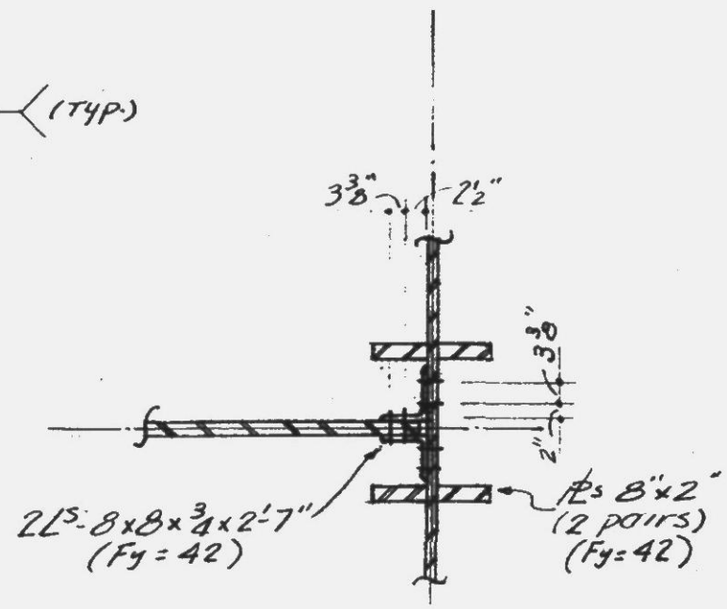

Section a-a

LICENSED PROFESSIONAL ENGINEER
LESLIE E. ROBERTSON
No. 34360
STATE OF NEW YORK

DRAWN
A.F.

REVIEWED
E.L.

12-JK2-132

SKILLING - HELLE - CHRISTIANSEN - ROBERTSON — Structural & Civil Engineers

PROJECT: THE WORLD TRADE CENTER | TITLE: GIRDER CONNECTION DETAIL | DATE: 5-1-68

REVISIONS
6-28-68
7-19-68
1-8-69

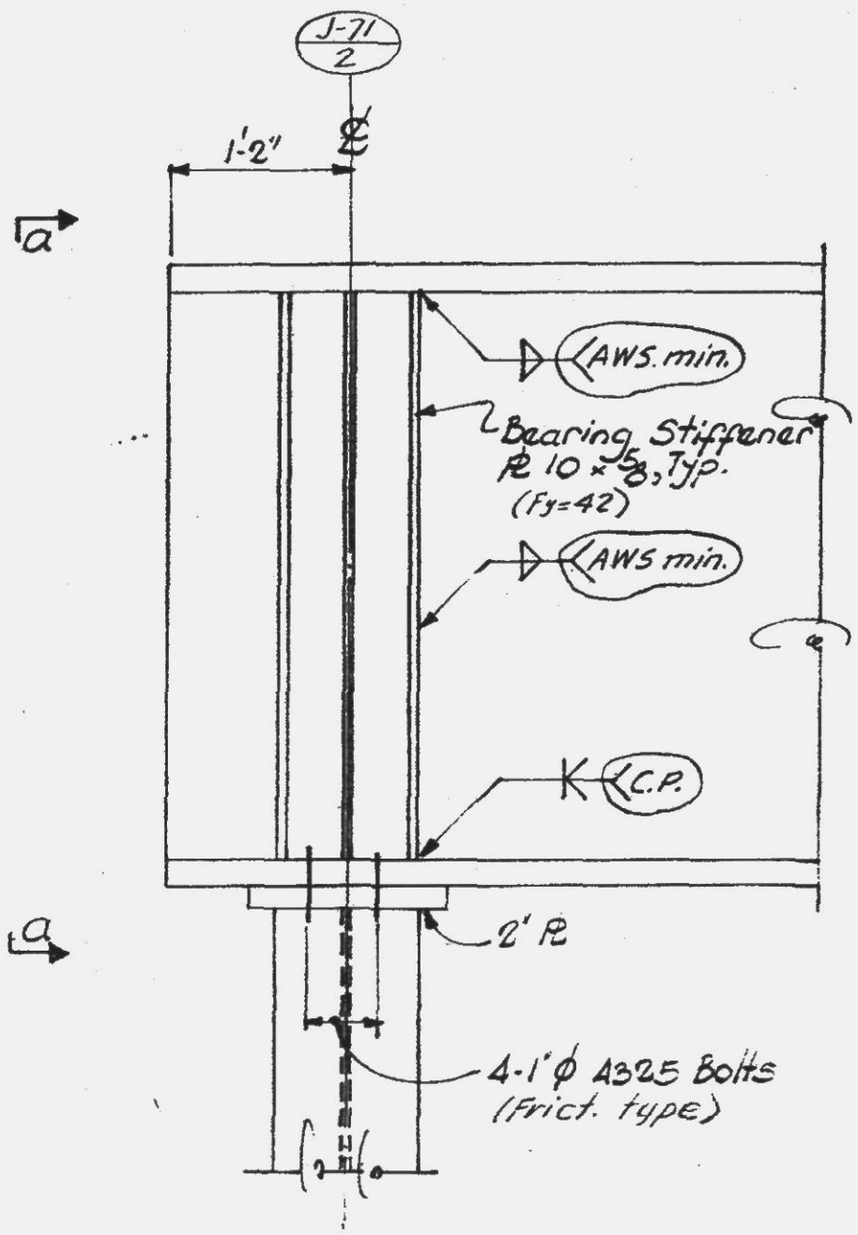

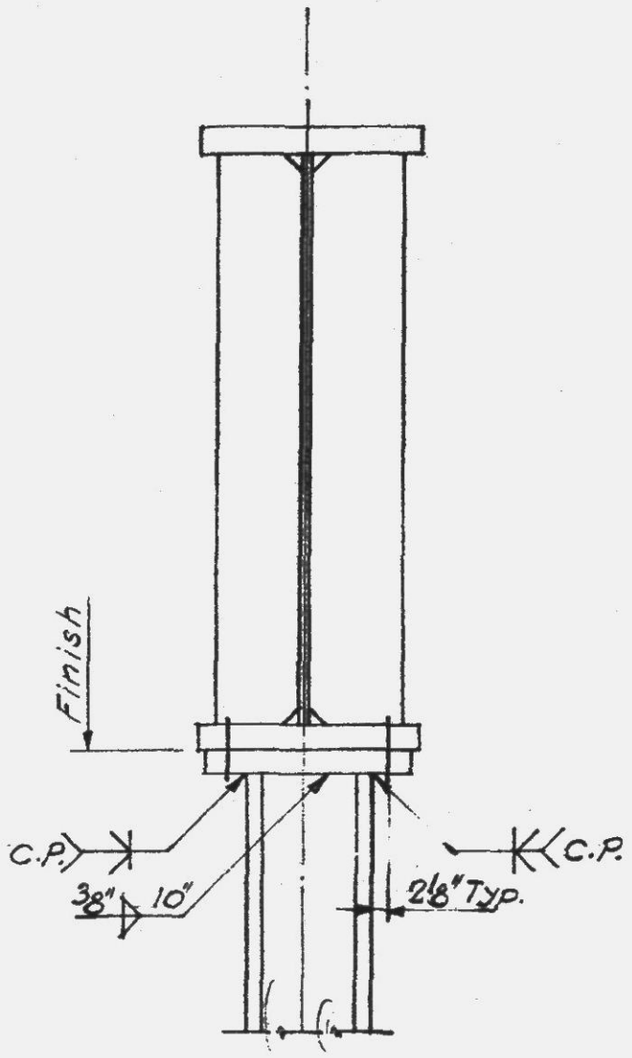

Section a-a

LICENSED PROFESSIONAL ENGINEER
LESLIE E. ROBERTSON
No. 34360
UNIVERSITY OF THE STATE OF NEW YORK

DRAWN A.F.
REVIEWED E.L.

12-JA2-133

SKILLING - HELLE - CHRISTIANSEN - ROBERTSON Structural & Civil Engineers

PROJECT THE WORLD TRADE CENTER | TITLE GIRDER CONNECTION DETAIL | DATE 5-1-68

REVISIONS

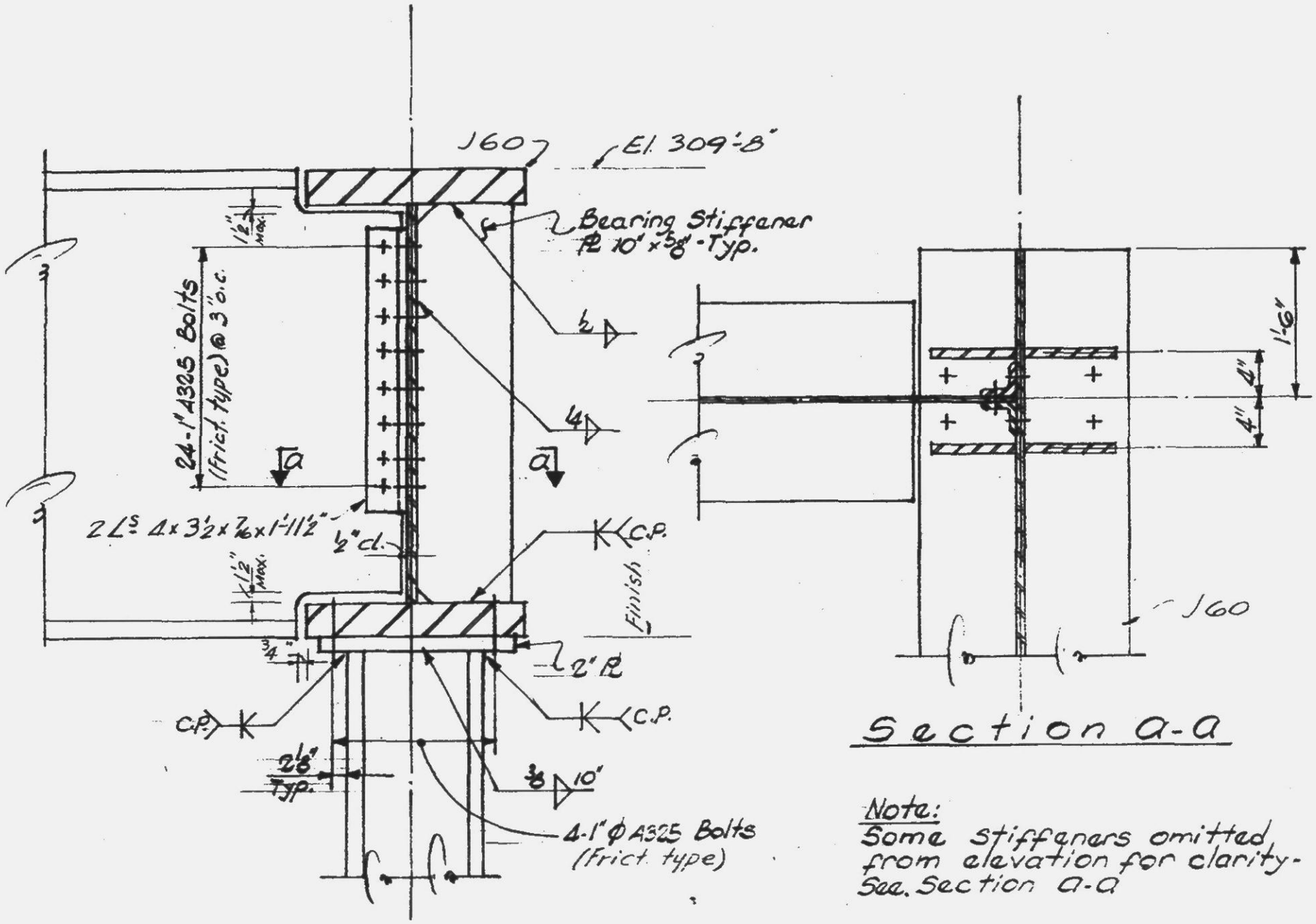

Section a-a

Note:
Some stiffeners omitted from elevation for clarity - See Section a-a

REGISTERED PROFESSIONAL ENGINEER
LESLIE E. ROBERTSON
No. 34360
UNIVERSITY OF THE STATE OF NEW YORK

12-JK2-134

SKILLING - HELLE - CHRISTIANSEN - ROBERTSON

PROJECT THE WORLD TRADE CENTER | TITLE GIRDER CONNECTION DETAIL | DATE 5-1-68

REVISIONS
6-7-68
7-19-68

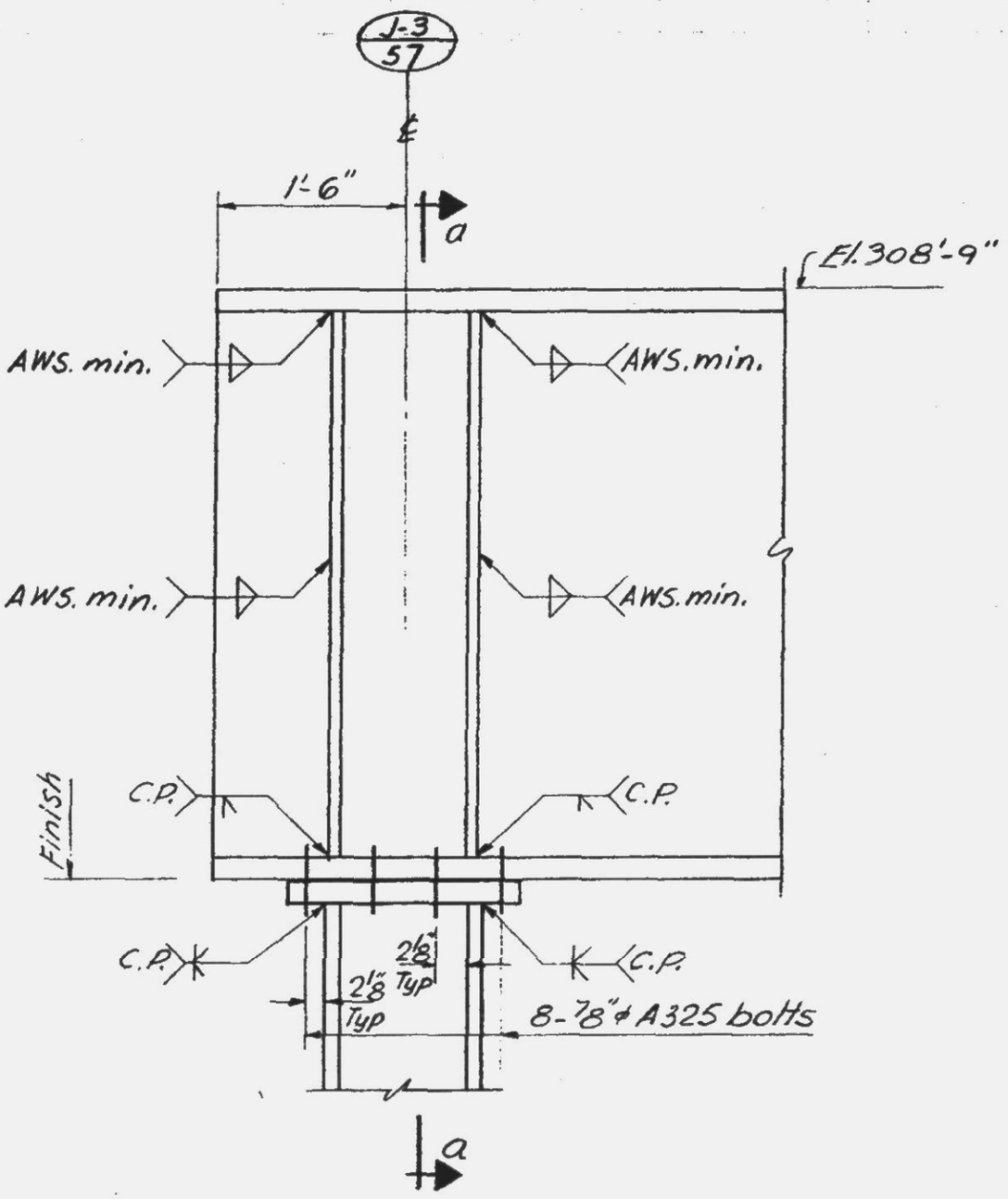

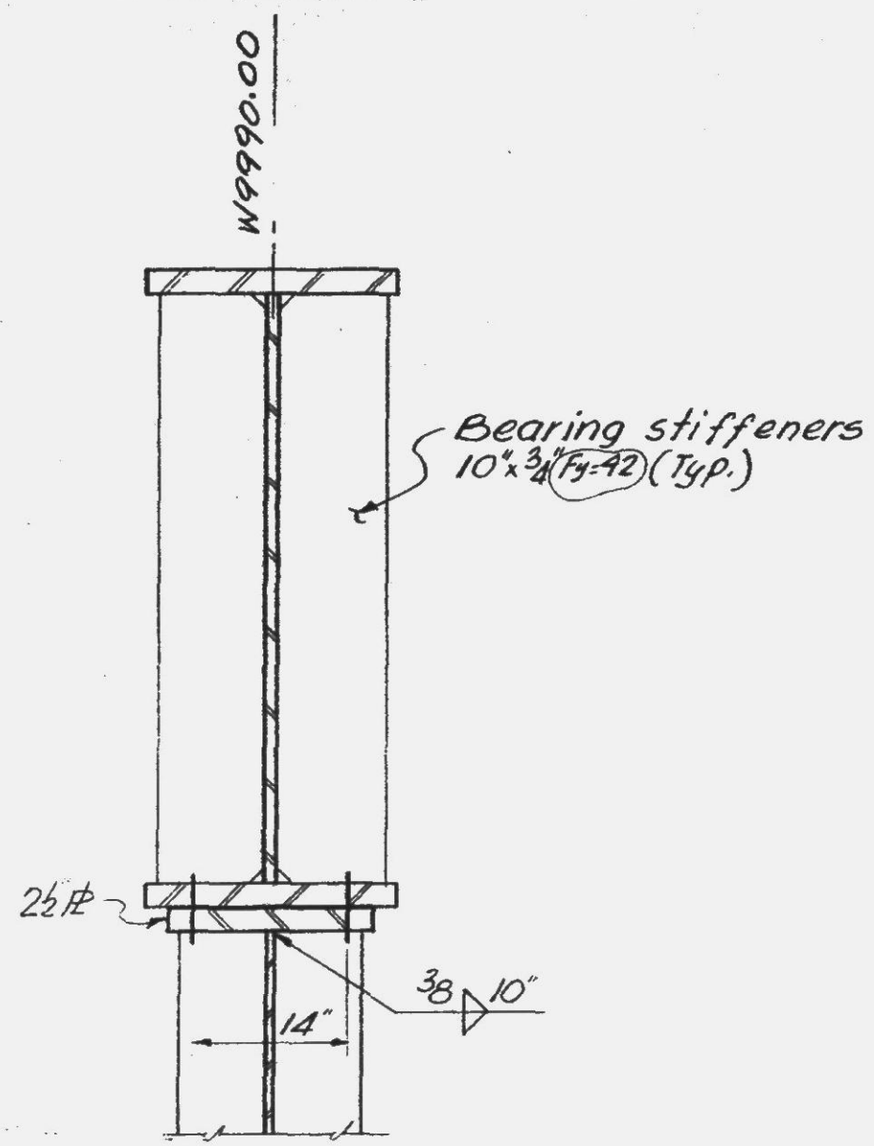

Section a-a

LICENSED PROFESSIONAL ENGINEER
LESLIE E. ROBERTSON
No. 34360
THE STATE OF NEW YORK

12-JK2-135

SKILLING - HELLE - CHRISTIANSEN - ROBERTSON — Structural & Civil Engineers

PROJECT THE WORLD TRADE CENTER

TITLE GIRDER J2H CONNECTION DETAILS

DATE 6-7-68

REVISIONS

7-19-68

1-8-69

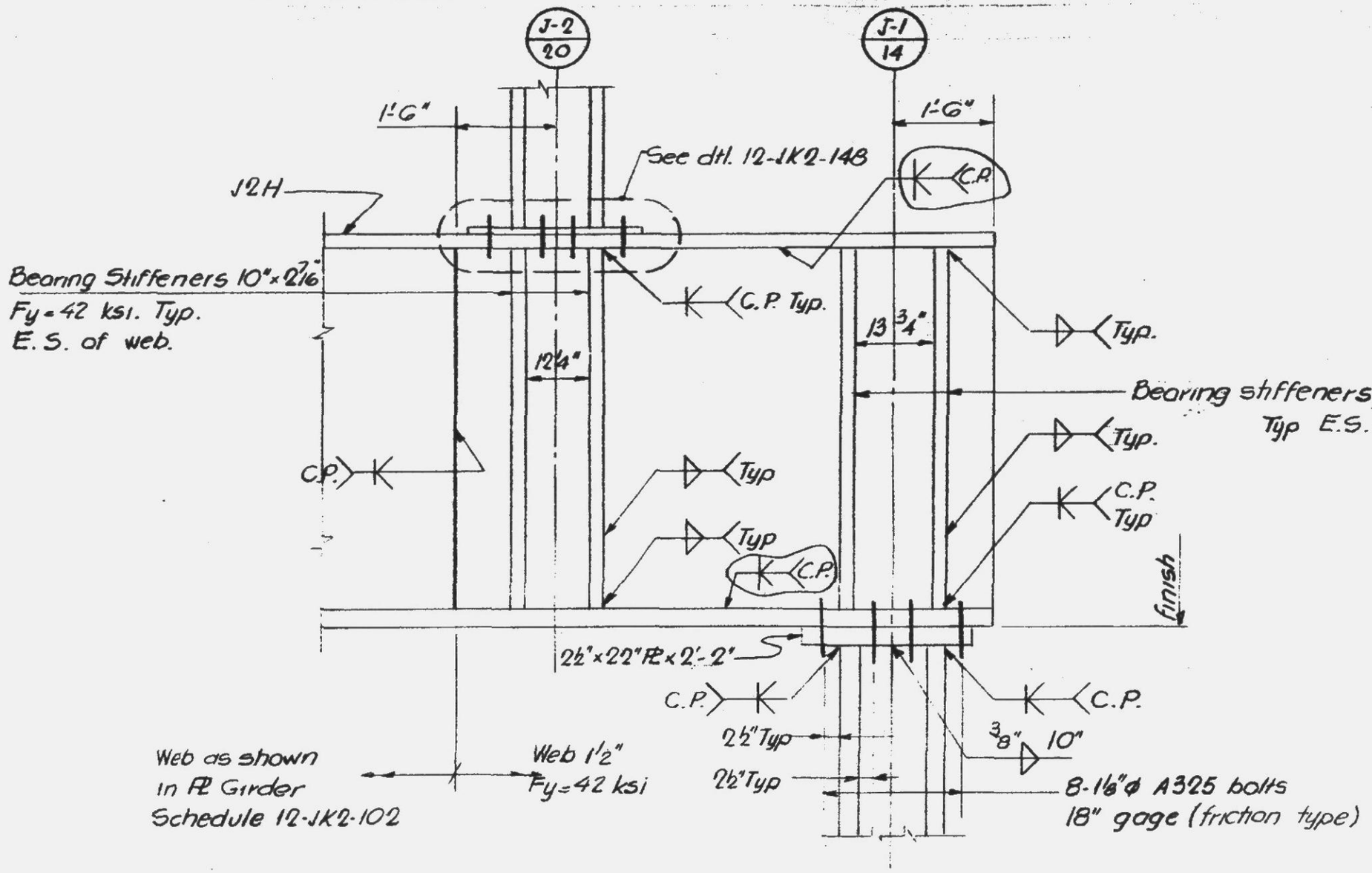

Welds are AISC minimum unless otherwise shown

Ref. dwgs: 12-JK2-102, SJ-75

LICENSED PROFESSIONAL ENGINEER
LESLIE E. ROBERTSON
No. 34360
UNIVERSITY OF THE STATE OF NEW YORK

DRAWN
A.F.

REVIEWED
E.L.

12-JK2-136

SKILLING - HELLE - CHRISTIANSEN - ROBERTSON Structural & Civil Engineers

PROJECT THE WORLD TRADE CENTER | TITLE GIRDER J2I CONNECTION DETAIL | DATE 6-7-68

REVISIONS

7-19-68

1-8-69

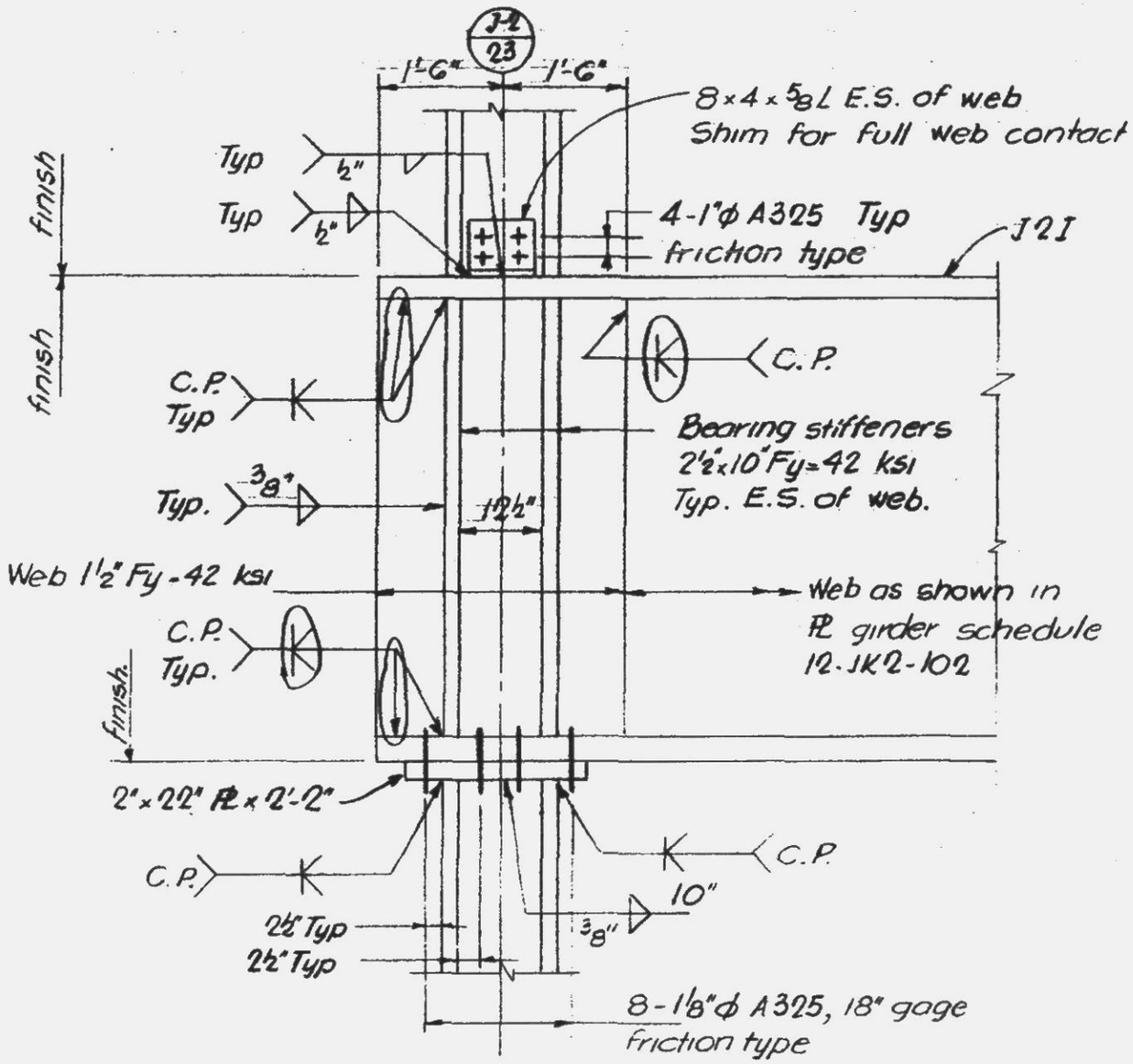

Ref. dwgs - 12-JK2-102, SJ-75

LICENSED PROFESSIONAL ENGINEER
LESLIE E. ROBERTSON
No. 34360
UNIVERSITY OF THE STATE OF NEW YORK

DRAWN
A.F.

REVIEWED
E.L.

12-JK2-137

SKILLING, HELLE, CHRISTIANSEN - ROBERTSON — Structural & Civil Engineers

PROJECT: [illegible] | TITLE: GIRDER J4N CONNECTION DETAIL | DATE: 6-7-68

REVISIONS
7-19-68
9-4-68
1-8-69

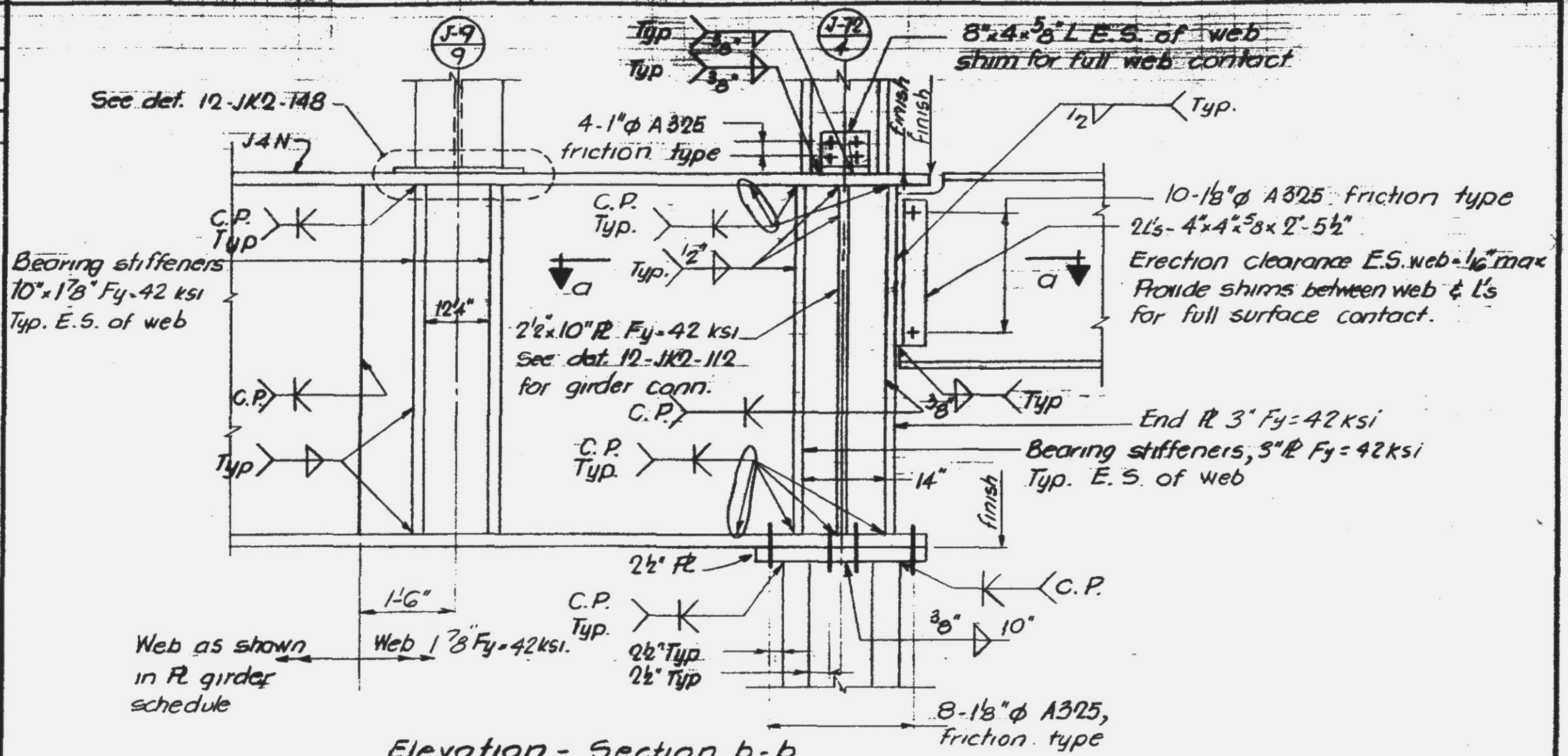

Elevation - Section b-b

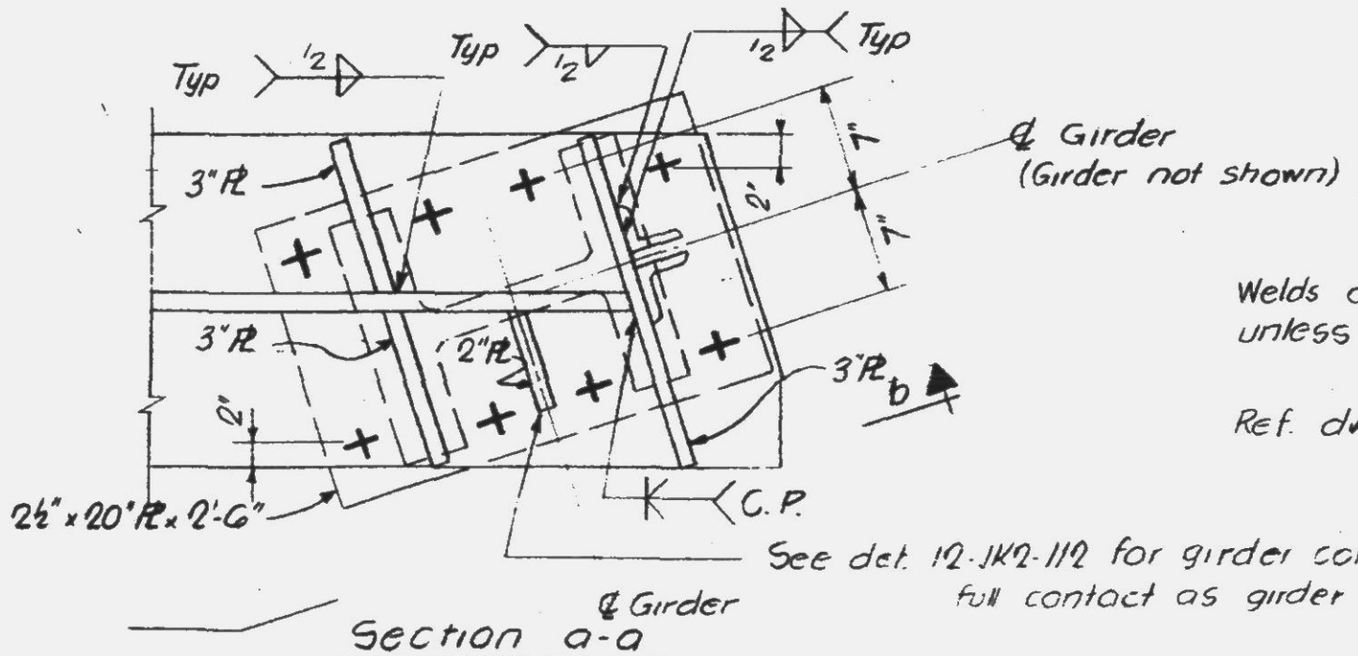

Section a-a

Welds are AISC minimum unless otherwise shown

Ref. dwgs: 12-JK2-102, SJ-76

LICENSED PROFESSIONAL ENGINEER — LESLIE E. ROBERTSON — No. 34360 — UNIVERSITY OF THE STATE OF NEW YORK

DRAWN A.F.
REVIEWED E.L.

12-JK2-138

SKILLING - HELLE - CHRISTIANSEN - ROBERTSON — STRUCTURAL & CIVIL ENGINEERS

PROJECT THE WORLD TRADE CENTER | TITLE GIRDER CONNECTION DETAIL | DATE 6-7-68

REVISIONS

6-28-68

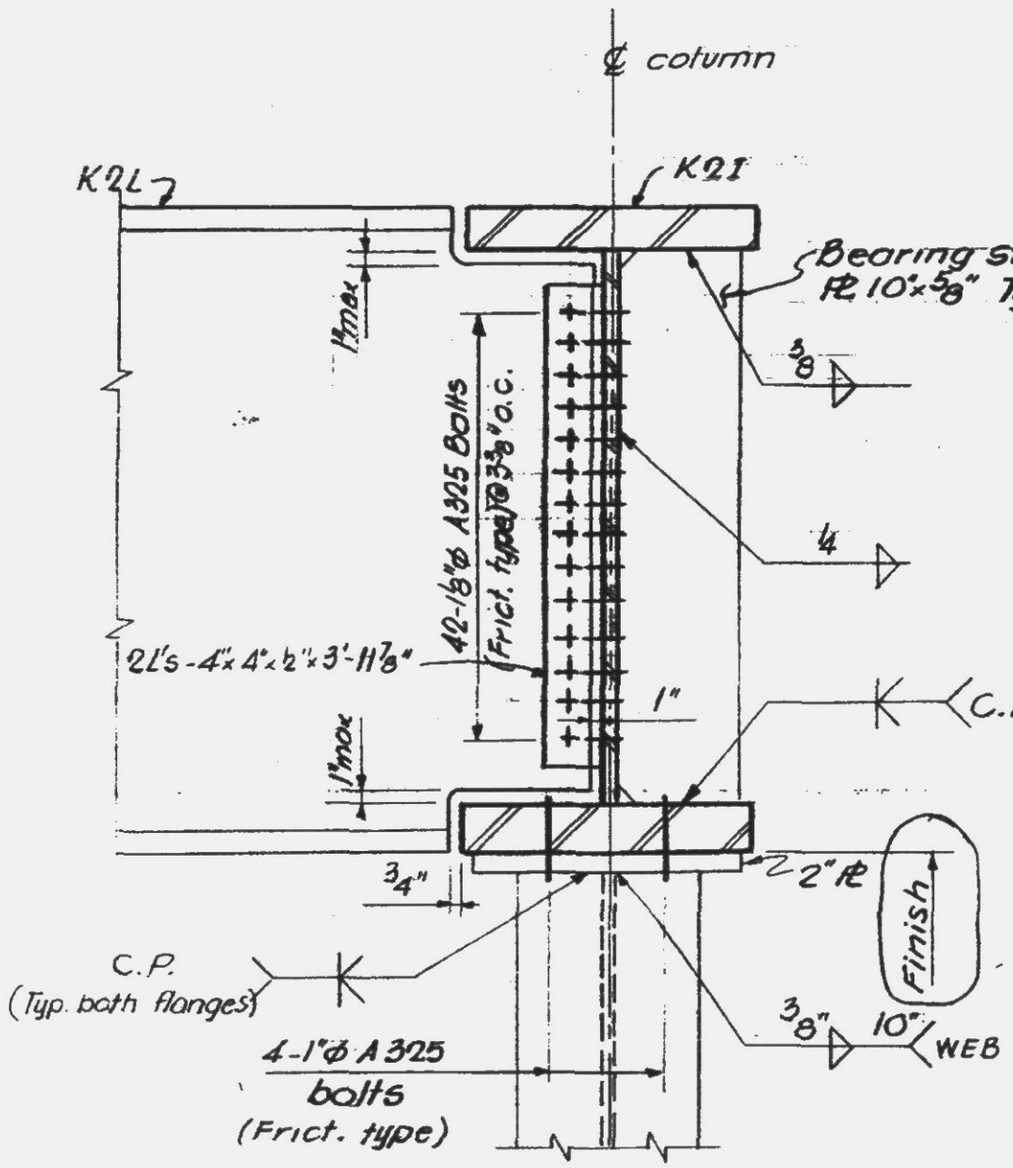

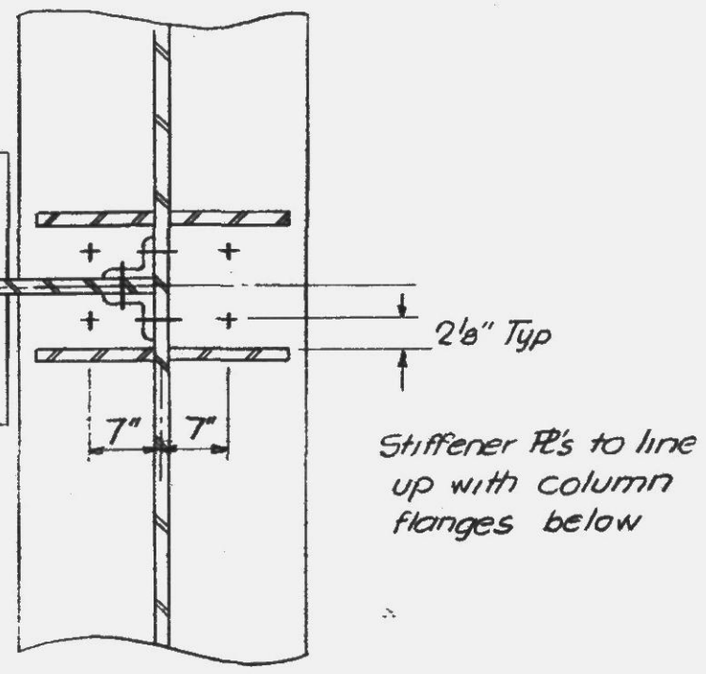

Stiffener PL's to line up with column flanges below

Section a-a

Note: Some stiffeners omitted from elevation from clarity. See Sect. a-a

LICENSED PROFESSIONAL ENGINEER
LESLIE E. ROBERTSON
No. 34360
UNIVERSITY OF THE STATE OF NEW YORK

12-JK2-139

SKILLING - HELLE - CHRISTIANSEN - ROBERTSON Structural & Civil Engineers

PROJECT THE WORLD TRADE CENTER | TITLE GIRDER CONNECTION DETAIL | DATE 6-7-68

REVISIONS

6-28-68

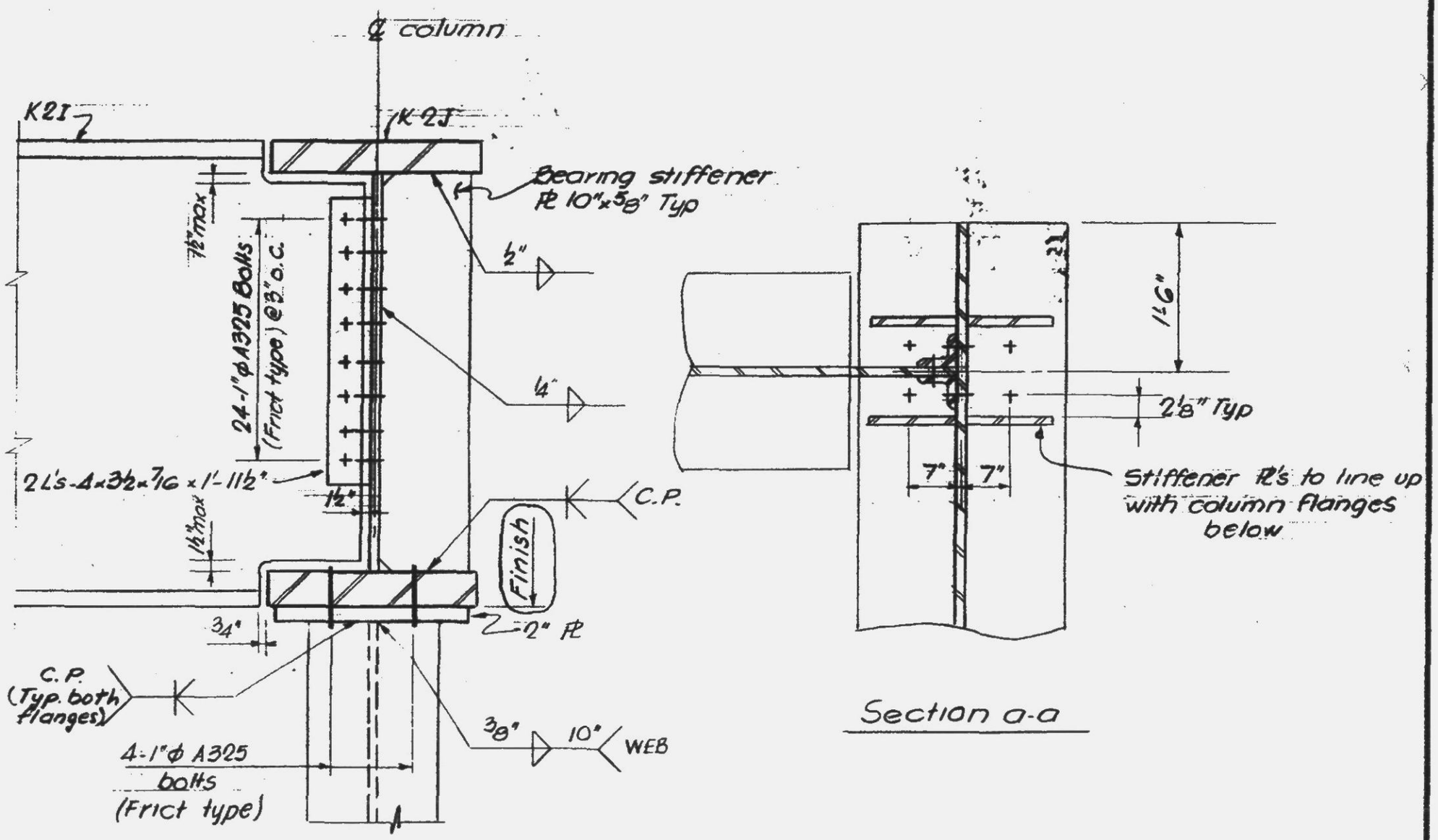

Section a-a

Note: Some stiffeners omitted from elevation for clarity. See Sect. a-a.

LICENSED PROFESSIONAL ENGINEER
LESLIE E. ROBERTSON
No. 34360
UNIVERSITY OF THE STATE OF NEW YORK

12-JK2-140

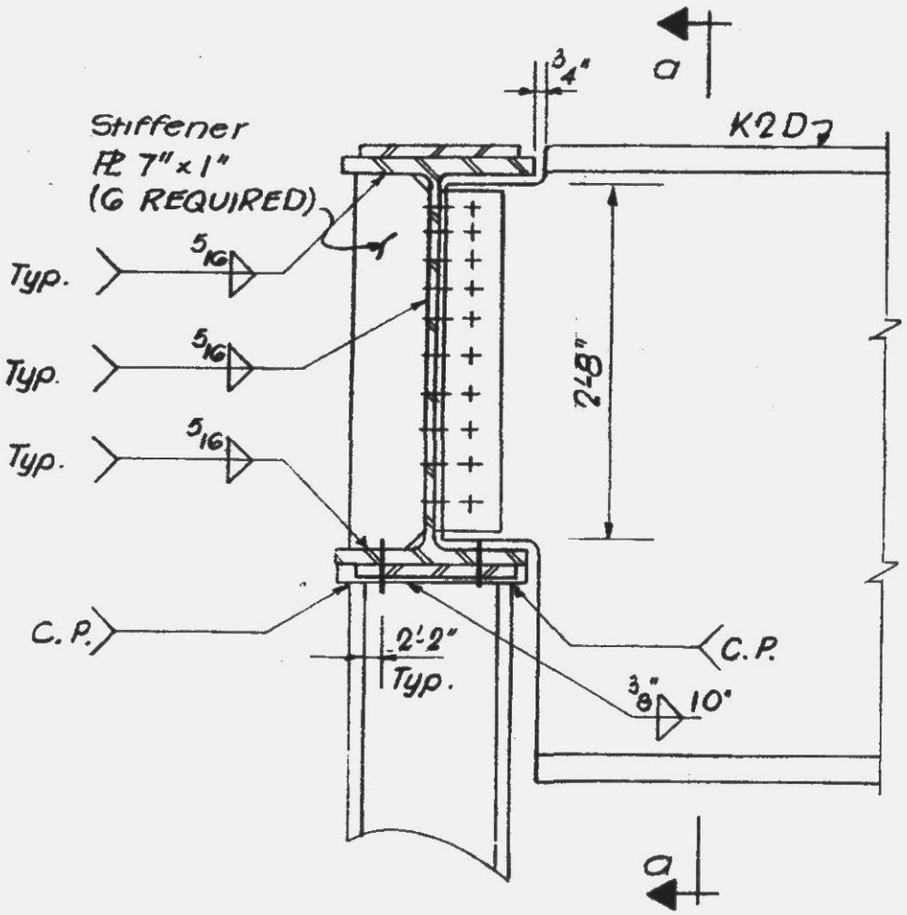

Elevation

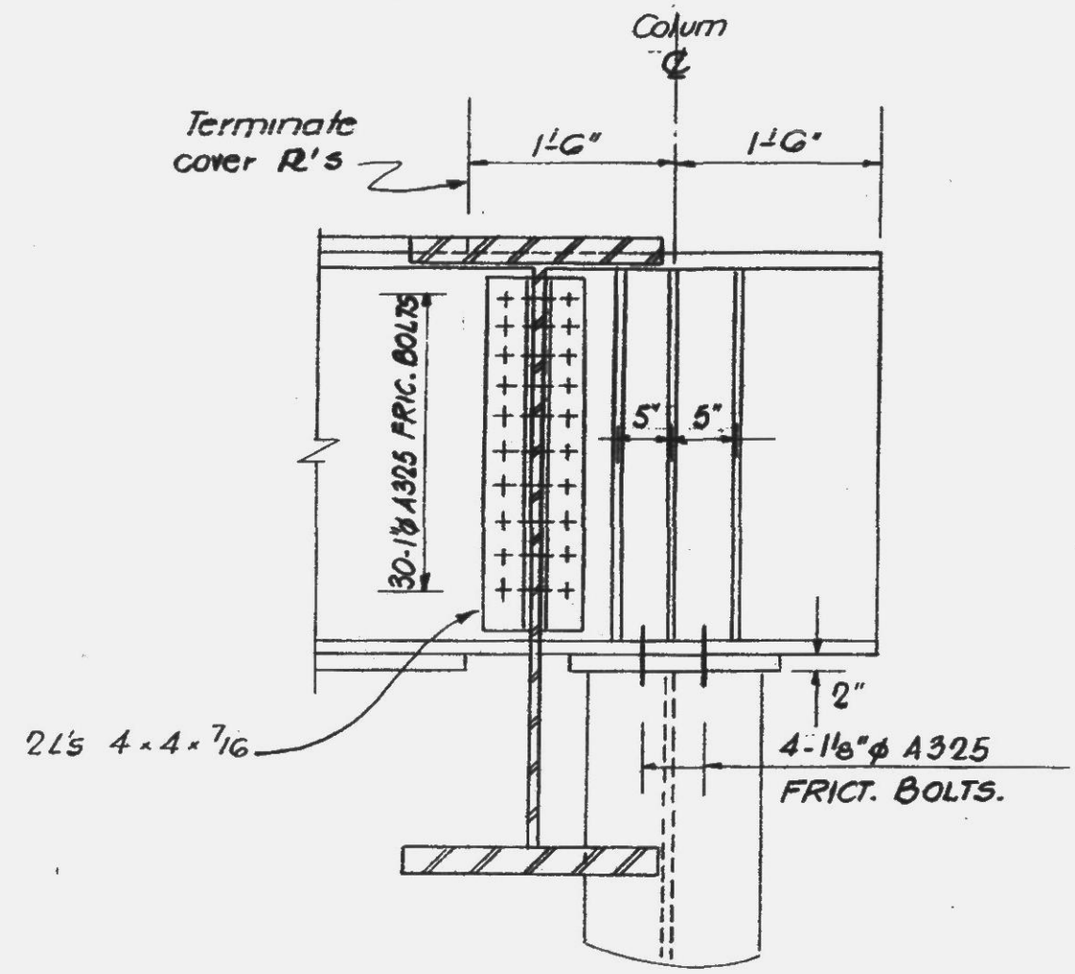

Section a-a

Note : Some stiffeners omitted from elevation for clarity

LICENSED PROFESSIONAL ENGINEER
LESLIE E. ROBERTSON
No. 34360
UNIVERSITY OF THE STATE OF NEW YORK

12-JK2-141

SKILLING - HELLE - CHRISTIANSEN - ROBERTSON

PROJECT: THE WORLD TRADE CENTER | TITLE: PLATE GIRDER JOINT DETAILS | DATE: 6-[illegible]

REVISIONS

7-19-68

1-8-69

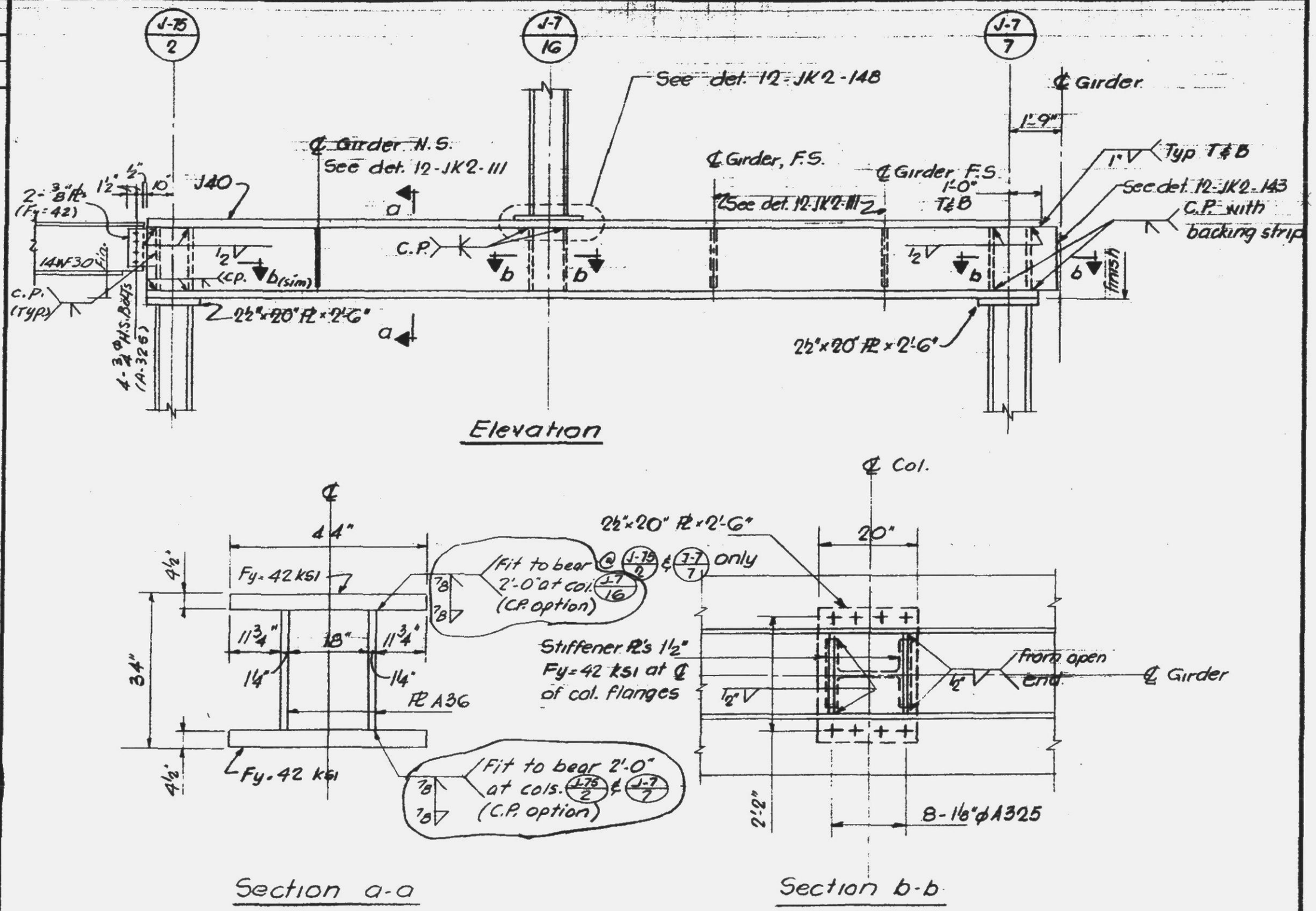

Ref. dwgs SJ-76

LICENSED PROFESSIONAL ENGINEER
LESLIE E. ROBERTSON
No. 34360
UNIVERSITY OF THE STATE OF NEW YORK

DRAWN A.F.

REVIEWED E.L.

12-JK2-142

SKILLING, HELLE, CHRISTIANSEN, ROBERTSON — Structural & Civil Engineers

PROJECT: WORLD TRADE CENTER

TITLE: GIRDER J40 CONNECTION DETAIL

DATE: 6-7-68

REVISIONS

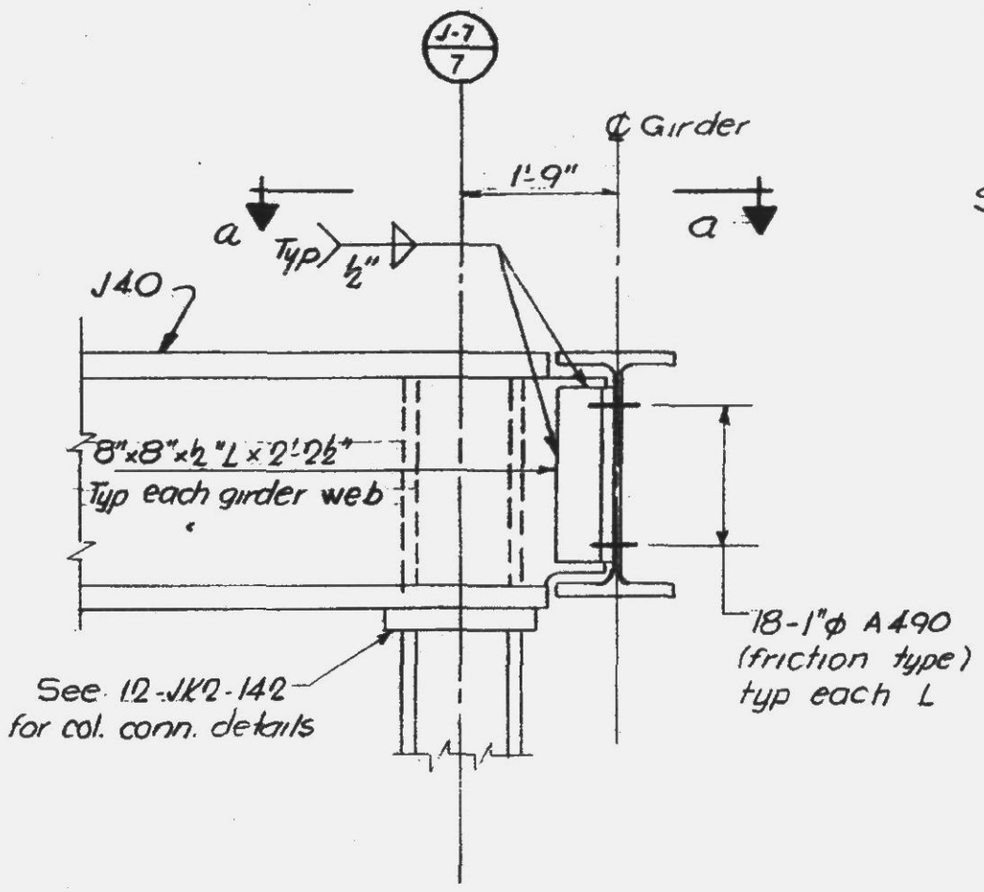

Elevation Section

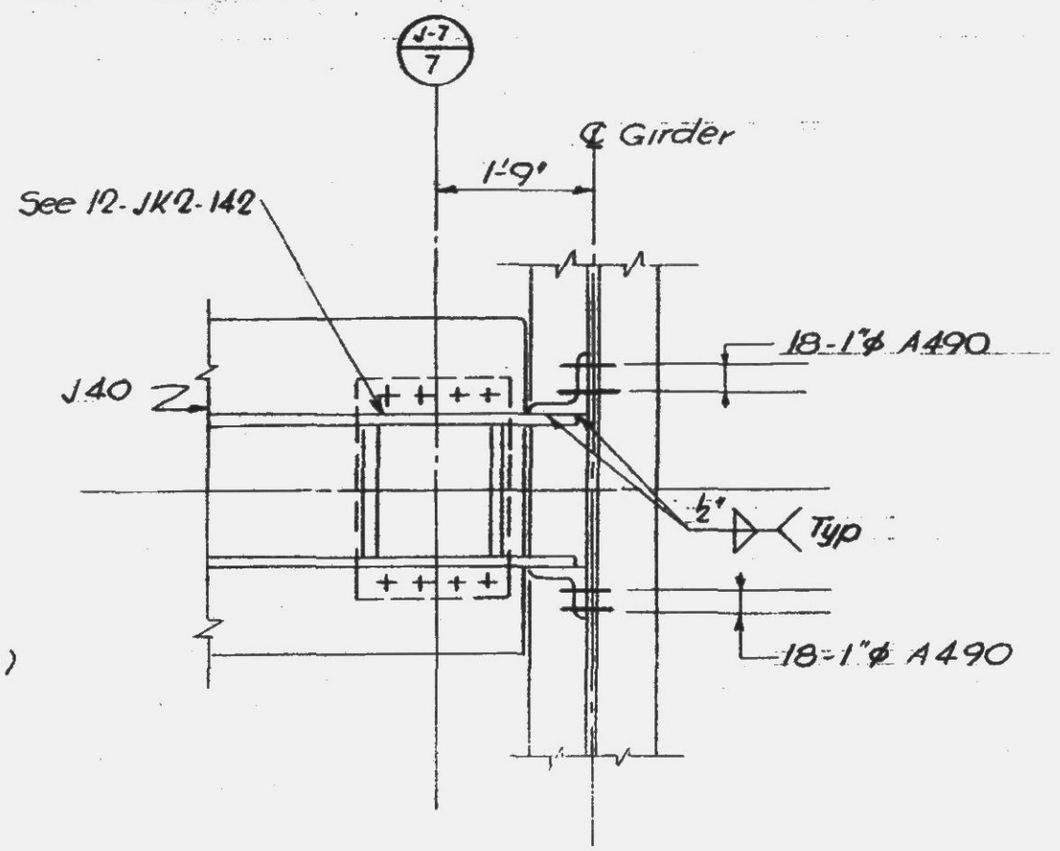

Plan - Section a-a

Ref. dwgs: 12-JK2-142, SJ-76

LICENSED PROFESSIONAL ENGINEER
LESLIE E. ROBERTSON
No. 34360
UNIVERSITY OF THE STATE OF NEW YORK

12-JK2-143

SKILLING - HELLE - CHRISTIANSEN - ROBERTSON Structural & Civil Engineers

PROJECT THE WORLD TRADE CENTER | TITLE BEAM CONNECTION DETAIL | DATE 6-7-68

REVISIONS

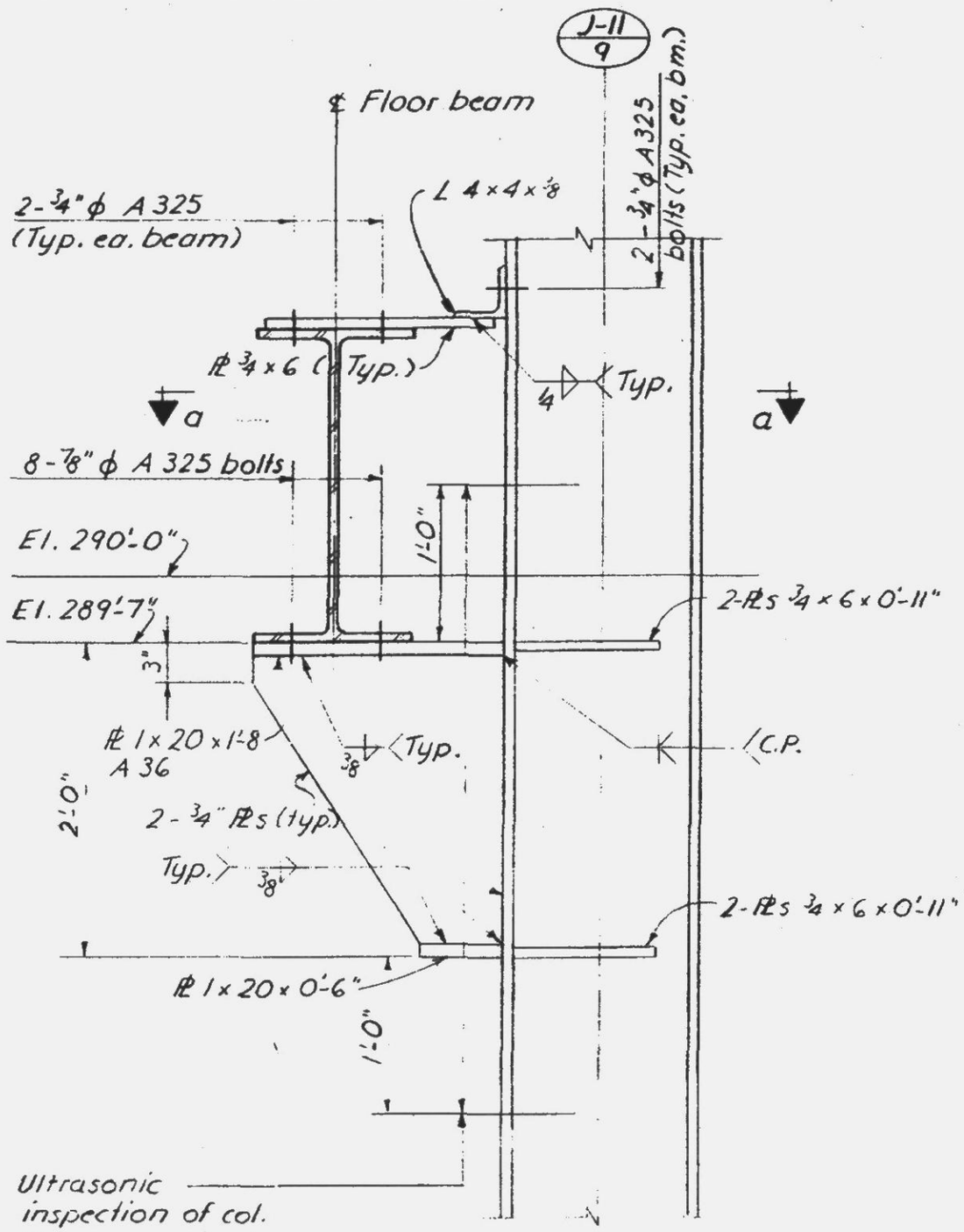

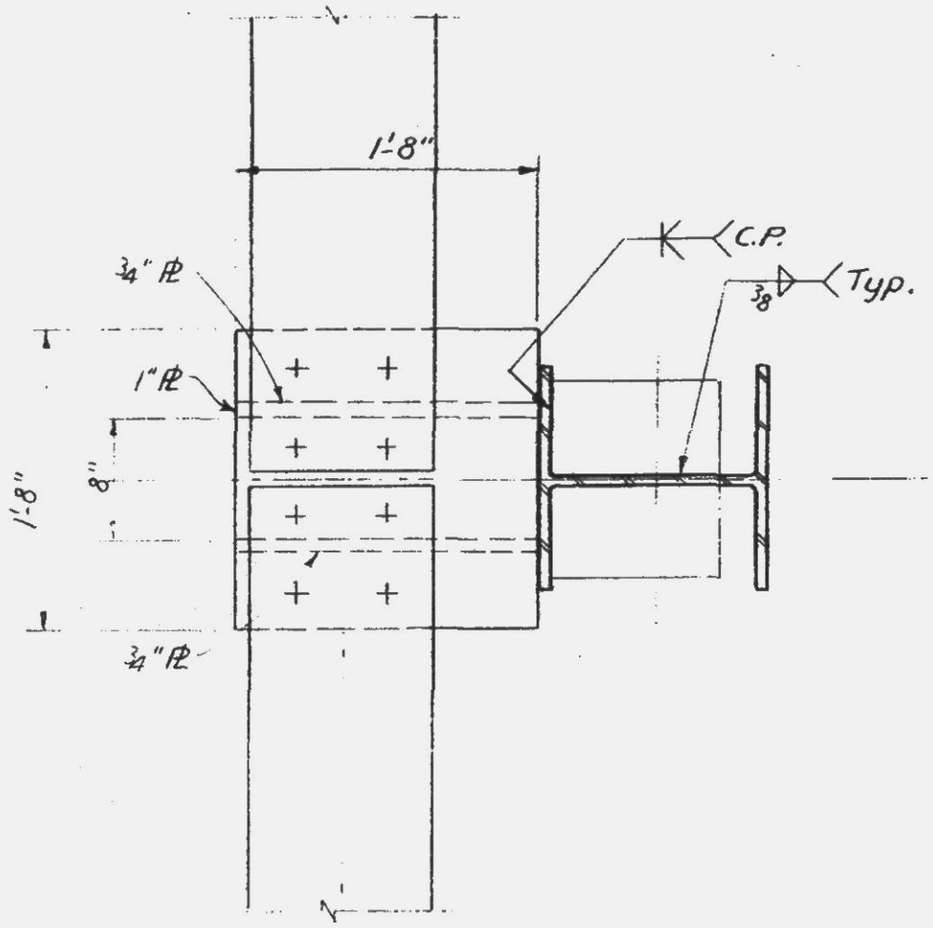

Section a-a

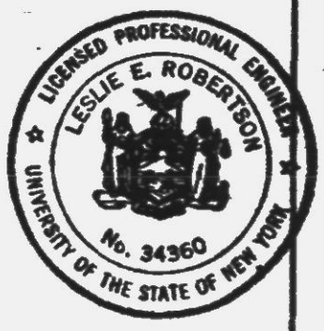

12-JK2-144

SKILLING, HELLE, CHRISTIANSEN, ROBERTSON — Structural & Civil Engineers

PROJECT THE WORLD TRADE CENTER | TITLE GIRDER CONNECTION DETAIL | DATE 9-4-68

REVISIONS

1-8-69

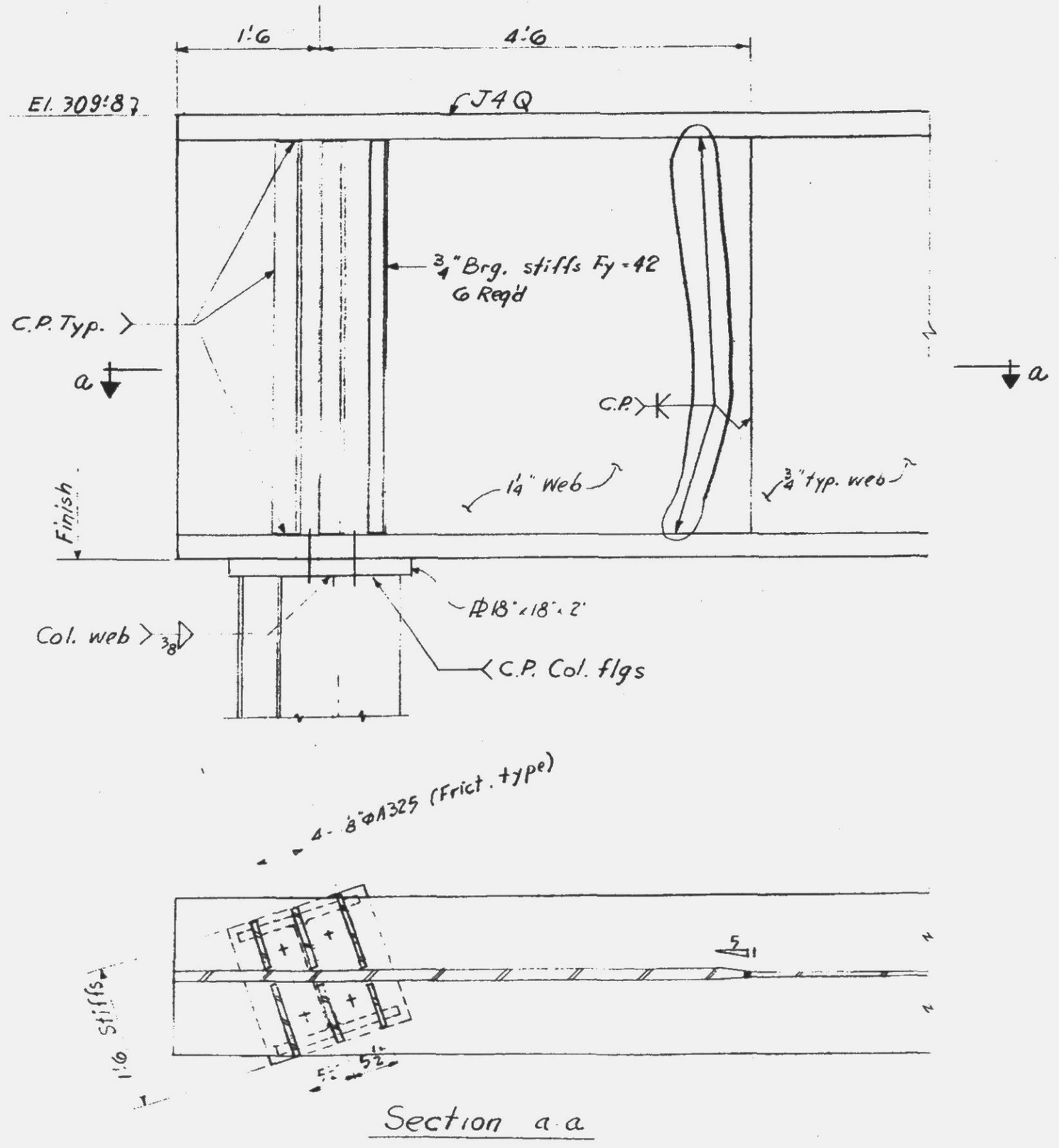

Section a-a

LICENSED PROFESSIONAL ENGINEER
LESLIE E. ROBERTSON
No. 34360
UNIVERSITY OF THE STATE OF NEW YORK

DESIGNED

DRAWN A.F.

REVIEWED E.L.

12-JK2-145

SKILLING, HELLE, CHRISTIANSEN, ROBERTSON — Structural & Civil Engineers

PROJECT: THE WORLD TRADE CENTER | TITLE: DETAIL OF PLATE GIRDER | DATE: 9-4-68

REVISIONS
1-8-69

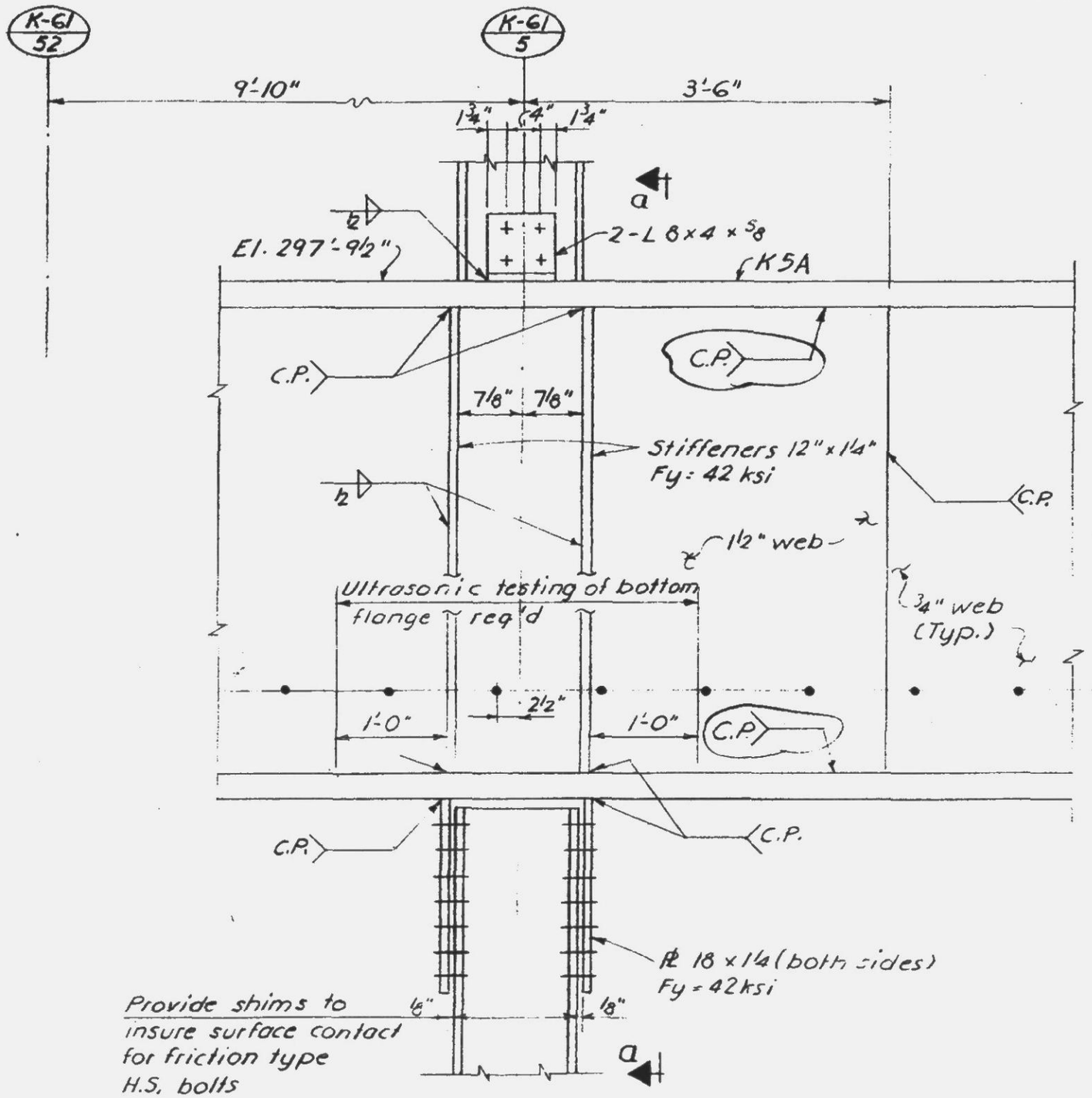

Elevation

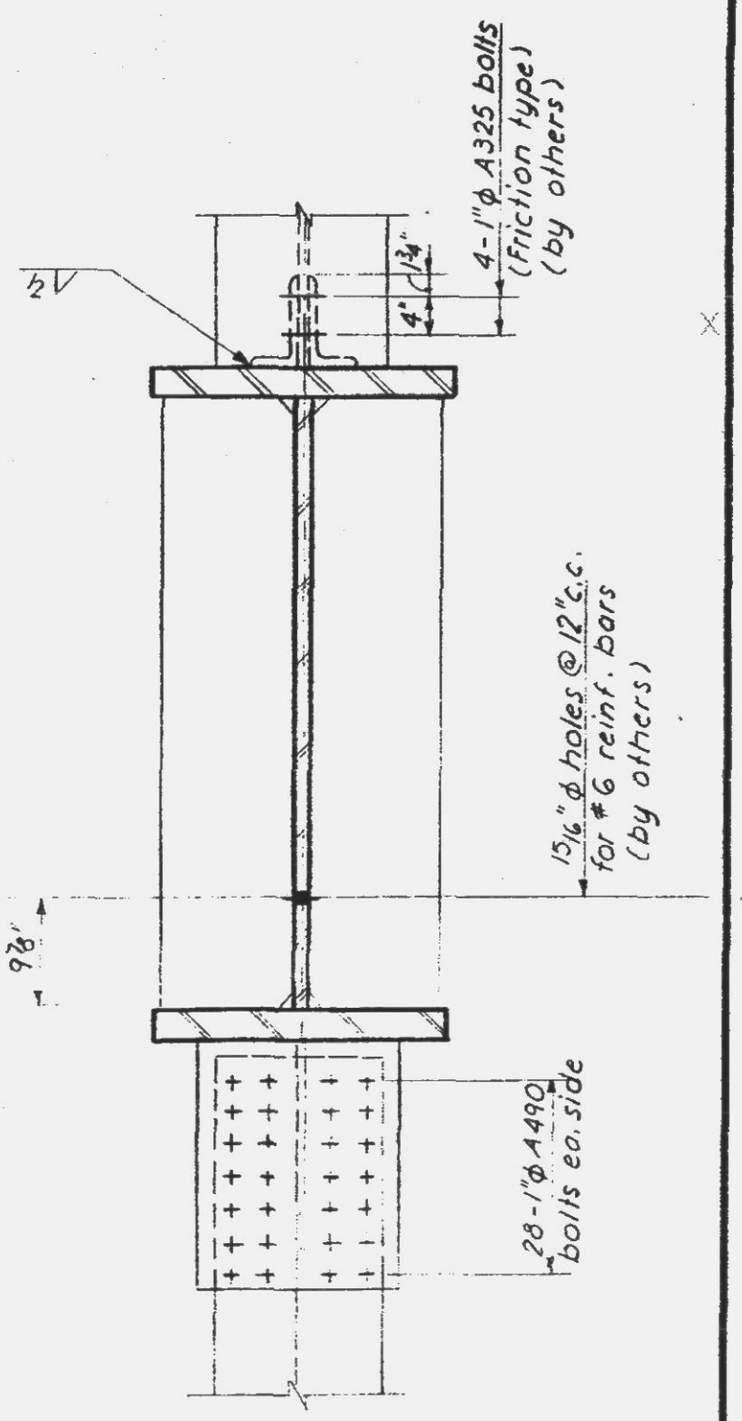

Section a-a

LICENSED PROFESSIONAL ENGINEER — LESLIE E. ROBERTSON — No. 34360 — UNIVERSITY OF THE STATE OF NEW YORK

DESIGNED

DRAWN: A.F.

REVIEWED: F.L

12-JK2-146

SKILLING, HELLE, CHRISTIANSEN, ROBERTSON — Structural & Civil Engineers

PROJECT THE WORLD TRADE CENTER | TITLE DETAIL OF PLATE GIRDER | DATE 9-4-68

REVISIONS

10-15-68

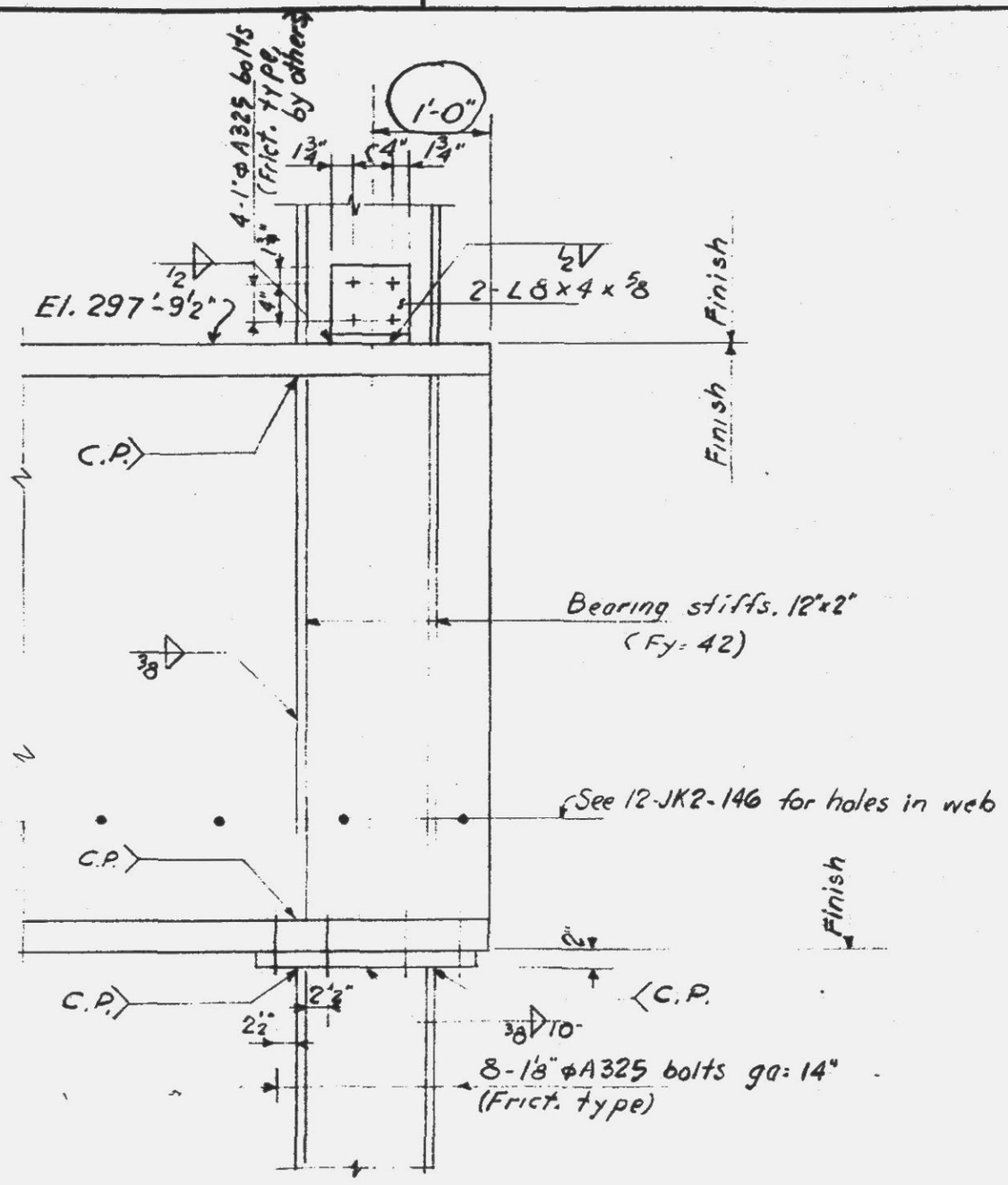

LICENSED PROFESSIONAL ENGINEER — LESLIE E. ROBERTSON — No. 34360 — UNIVERSITY OF THE STATE OF NEW YORK

DESIGNED

DRAWN

REVIEWED

12-JK2-147

SKILLING - HELLE - CHRISTIANSEN - ROBERTSON — Structural & Civil Engineers

PROJECT: THE WORLD TRADE CENTER | TITLE: COLUMN CONNECTION DETAIL | DATE: 5-1-68

REVISIONS

9-4-68

Columns under 'c' designation, by others. see plan for exact orientation

2Ls 8x4x½ x 0'-10"

4-1"ϕ A325 bolts (By others)

Shim

Finish

Finish

7/16

7/16

Bearing stiffeners 12"x 2" A36 (Typ.)

10"

Use 12 5/8" under cols. C5-16, C6-14 & C7-14

13/16" before finishing

Fin. ¼" (After tightening bolts)

90°

Top of bolt

5/16"

Detail 1

For cols. under 'c' designation. B. to B. of Ls = 2'-7" (shim Rs by others)

Typ. 7/16

2'-0"

6" 3" 3" 6"

13/16" R Fy 42

6"

6"

3"

3"

2'-0"

C50L High tensile huck bolts ⅞"ϕ (90° countersunk) See Det. 1. Bolts to be tightened from one end of R toward the other to insure surface contact between Rs.

Section a-a

LICENSED PROFESSIONAL ENGINEER LESLIE E. ROBERTSON N... 34360 STATE OF NEW YORK

12-JK2-148

SKILLING, HELLE, CHRISTIANSEN, ROBERTSON — Structural & Civil Engineers

PROJECT: THE WORLD TRADE CENTER | TITLE: GIRDER CONNECTION DETAILS | DATE: 10-15-68

REVISIONS

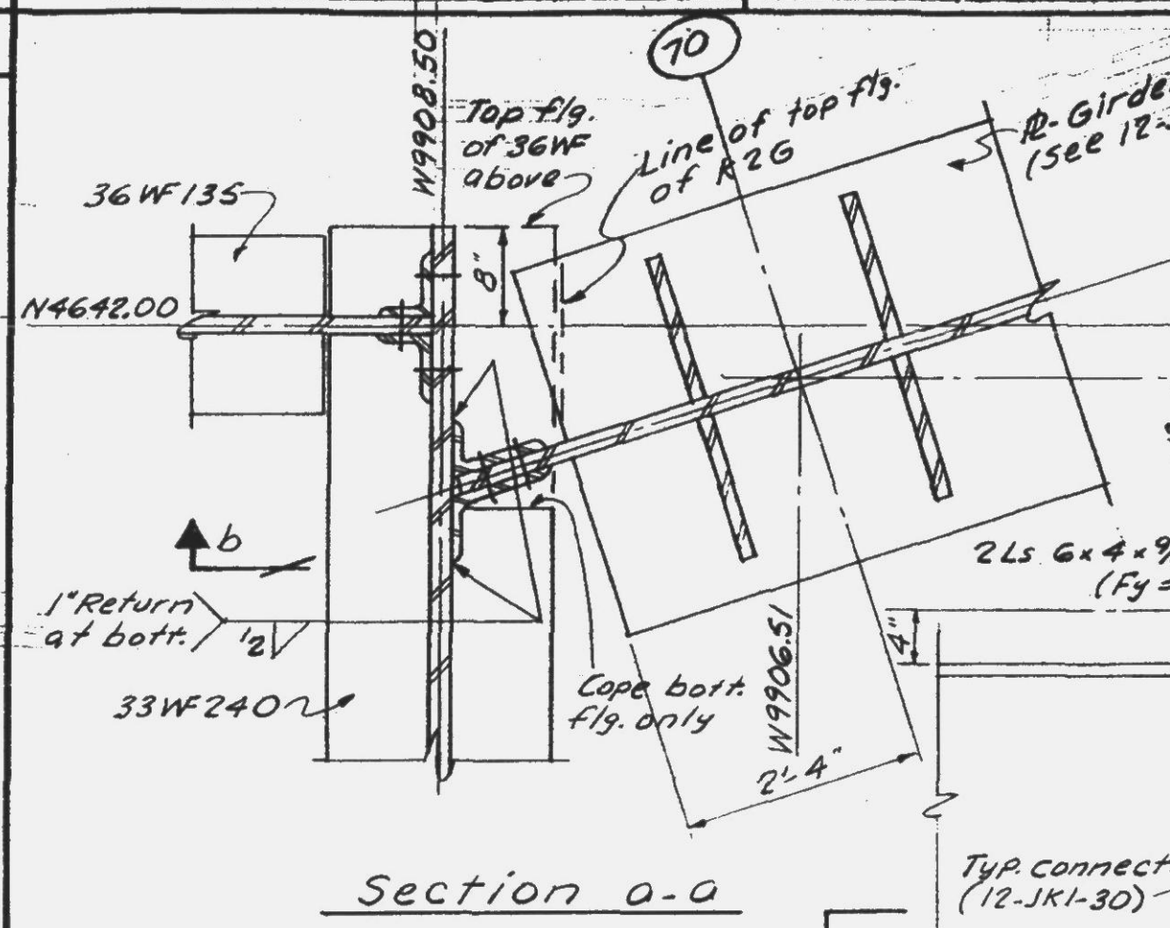

Section a-a

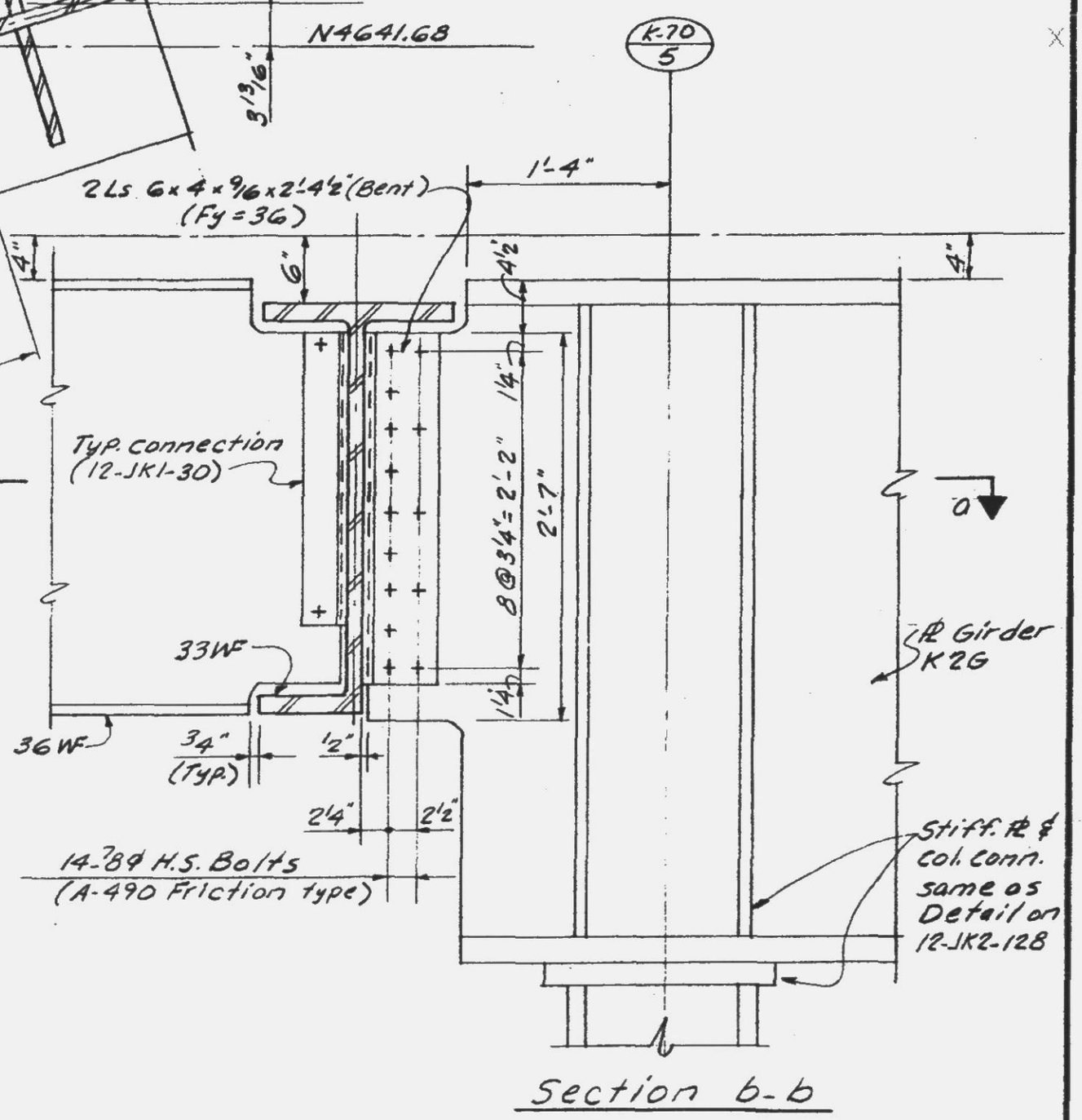

Section b-b

LICENSED PROFESSIONAL ENGINEER — LESLIE E. ROBERTSON — No. 34360 — UNIVERSITY OF THE STATE OF NEW YORK

DESIGNED

DRAWN

REVIEWED

12-JK2-149

REVISIONS

5-1-68

6-6-69

5-12-71

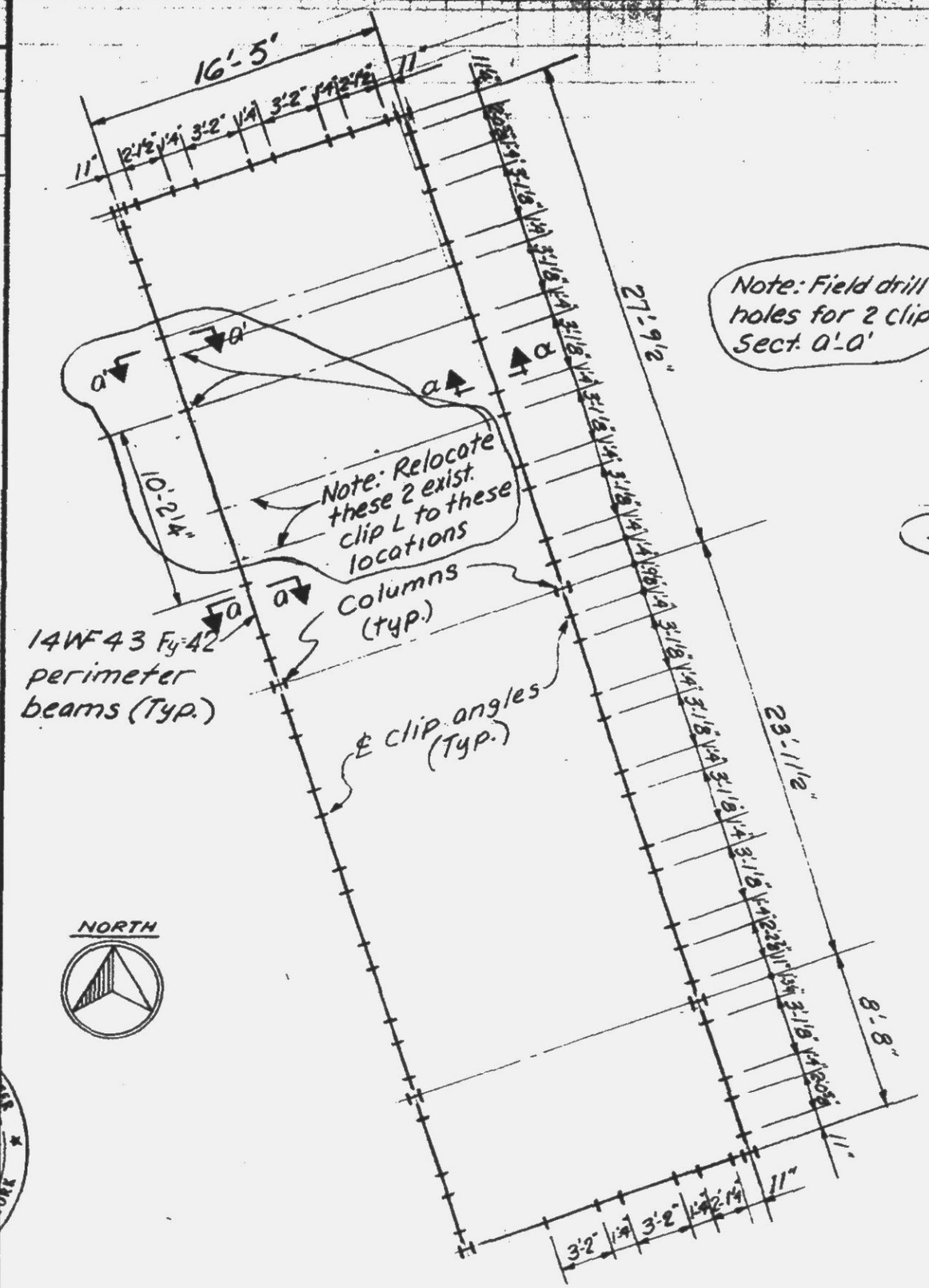

LOCATION OF CLIP Ls

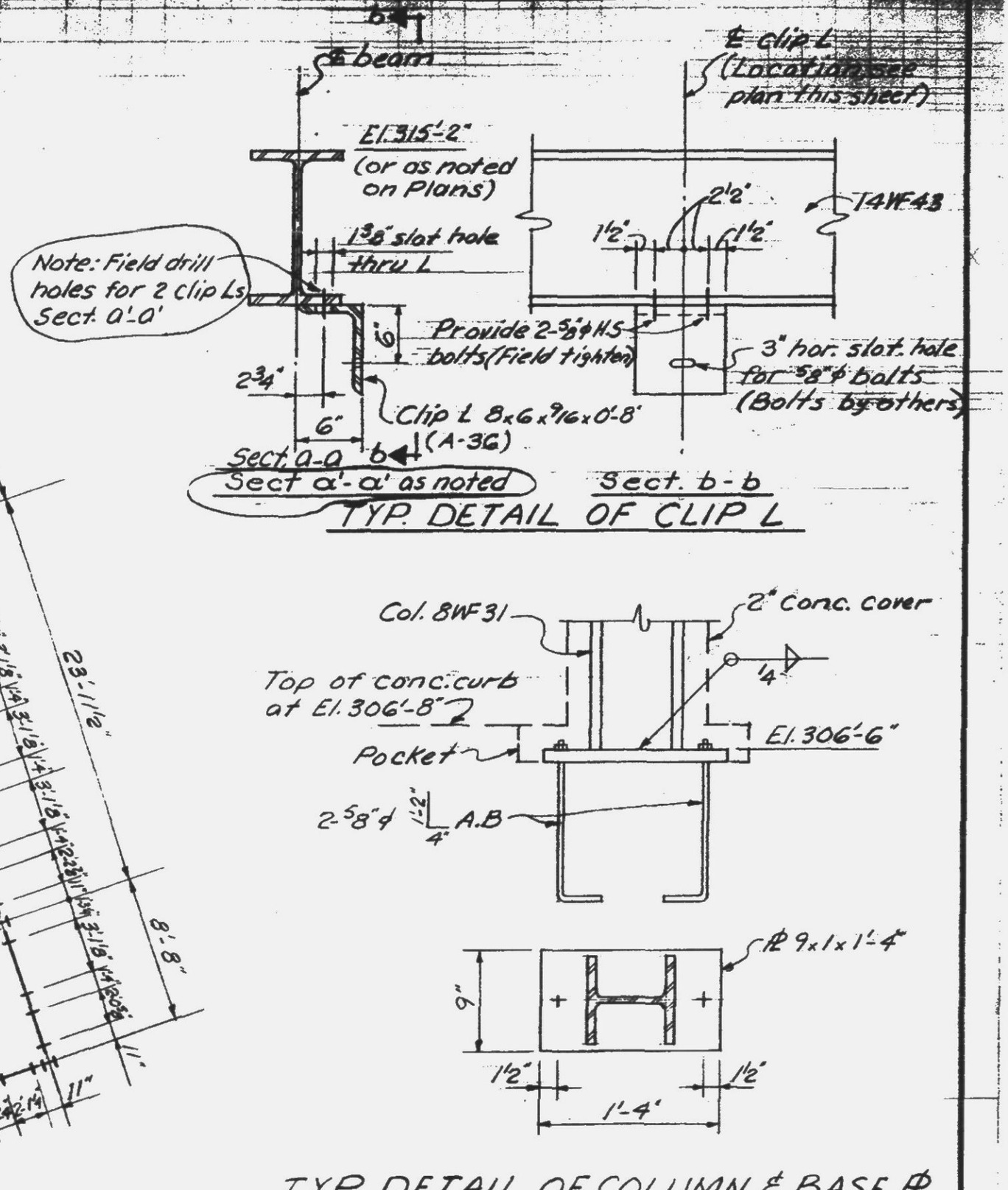

TYP. DETAIL OF CLIP L

TYP. DETAIL OF COLUMN & BASE PL

LICENSED PROFESSIONAL ENGINEER
LESLIE E. ROBERTSON
No. 34360
UNIVERSITY OF THE STATE OF NEW YORK

DRAWN
S.C.

REVIEWED
E.L.

12-JK2-150

SKILLING, HELLE, CHRISTIANSEN, ROBERTSON — Structural & Civil Engineers

PROJECT: THE WORLD TRADE CENTER | TITLE: SOUTH PROJECTION - EXHAUST HOUSING | DATE: 6-6-69

REVISIONS

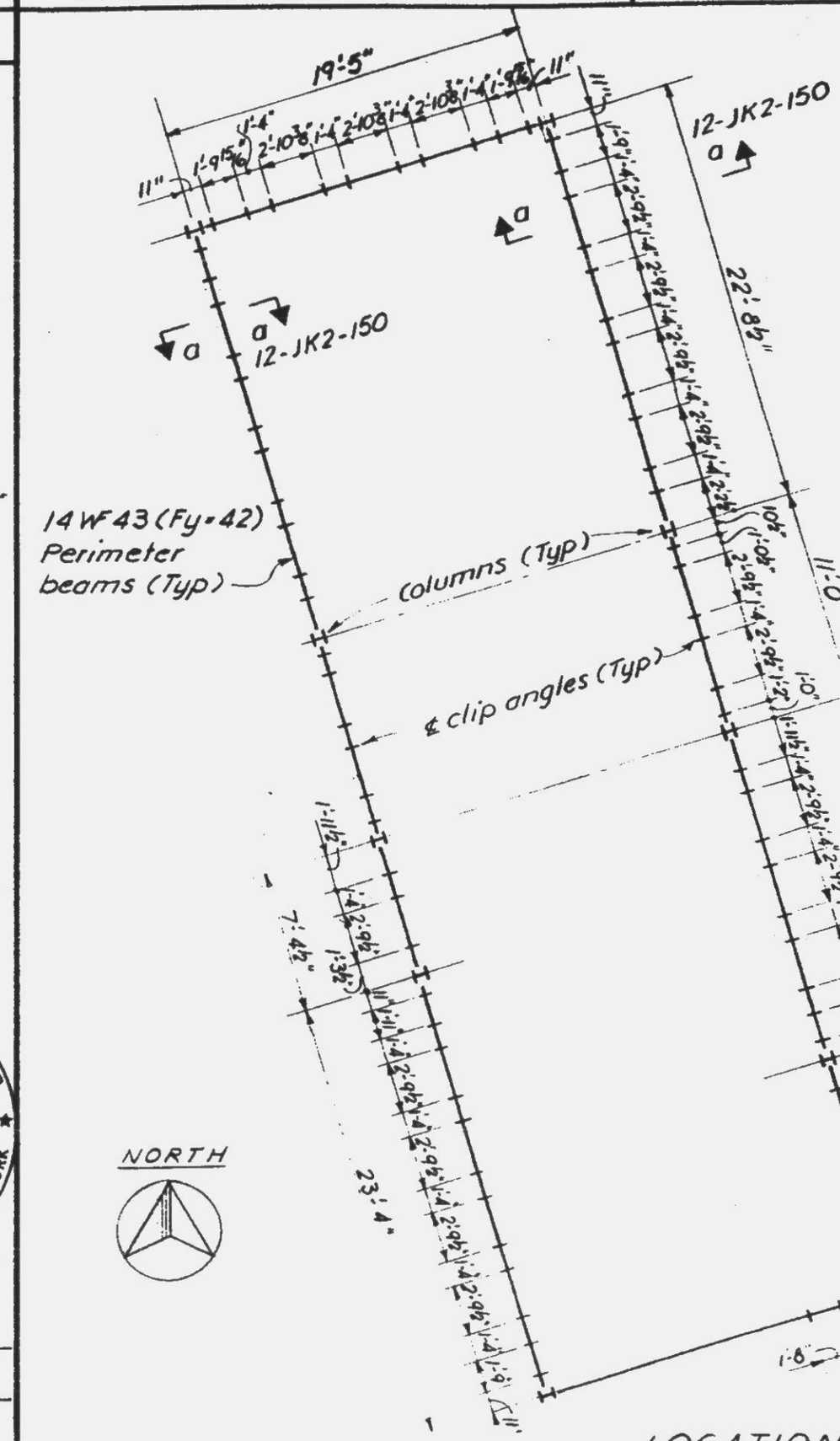

Notes:

1. See 12-JK2-150 for detail of clip Ls under perimeter beams and detail of columns.

LOCATION OF CLIP Ls

LICENSED PROFESSIONAL ENGINEER — LESLIE E. ROBERTSON — No. 34360 — UNIVERSITY OF THE STATE OF NEW YORK

DESIGNED

DRAWN: F. Smith

REVIEWED: E.L.

12-JK2-151

SKILLING, HELLE, CHRISTIANSEN, ROBERTSON — Structural & Civil Engineers

PROJECT: THE WORLD TRADE CENTER | TITLE: DETAIL OF PLATE GIRDER | DATE: 9-13-68

REVISIONS
1-8-69

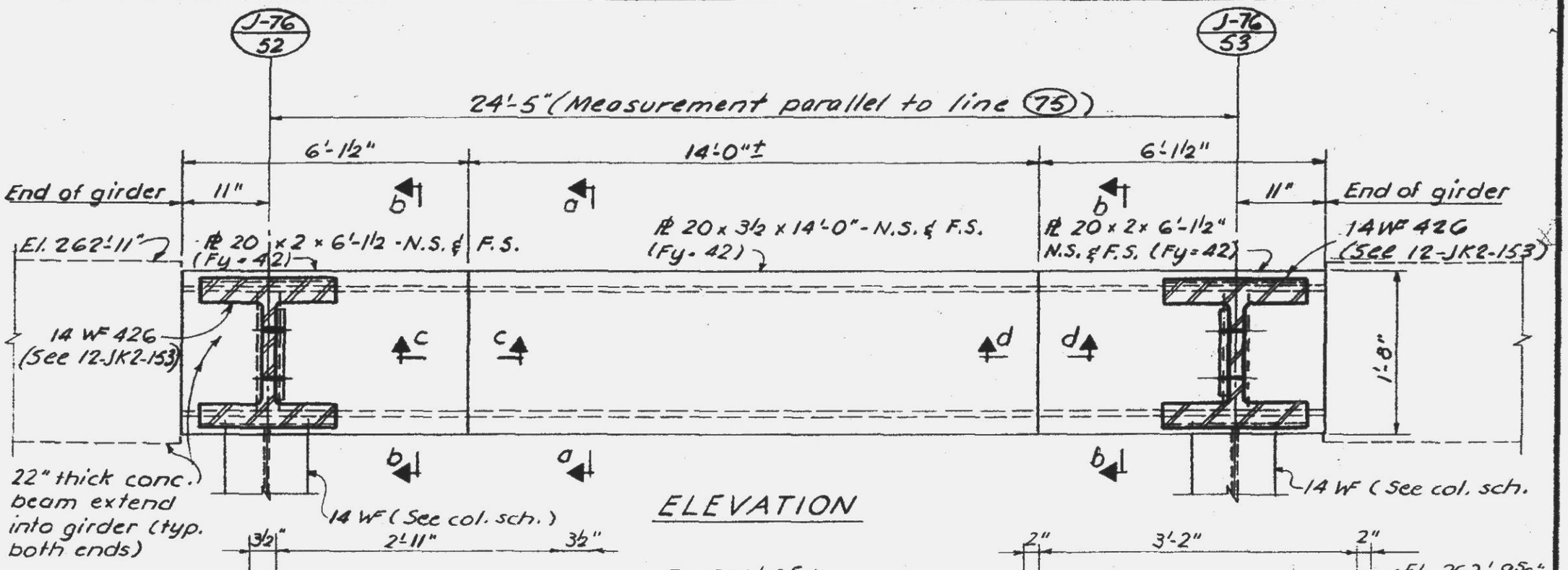

ELEVATION

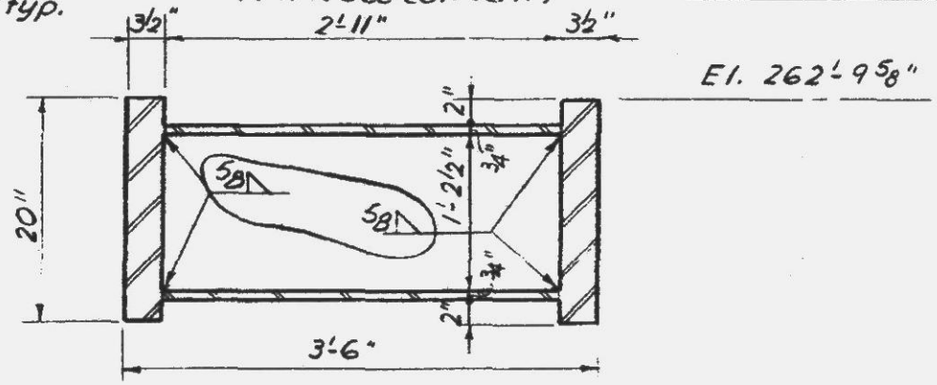

All mat. Fy = 42

Section a-a

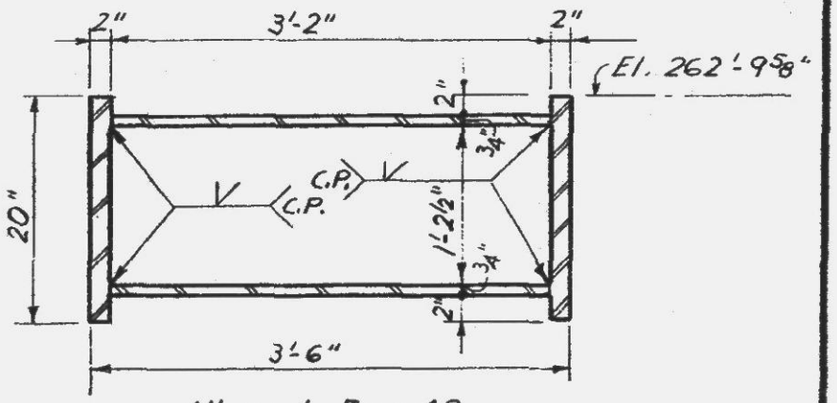

All mat. Fy = 42

Section b-b

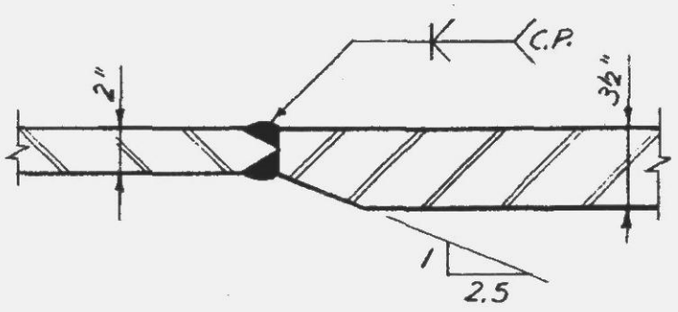

Section c-c (as shown)

Section d-d (opp. hand)

Notes:

1. All welds to be E 70xx.
2. All bolts to be A-325 friction type.
3. See dwg. 12-JK2-153 for connection of 14 WF 426 to girder.

LICENSED PROFESSIONAL ENGINEER — LESLIE E. ROBERTSON — No. 34360 — UNIVERSITY OF THE STATE OF NEW YORK

DESIGNED

DRAWN A.F.

REVIEWED E.L.

12-JK2-152

SKILLING, HELLE, CHRISTIANSEN, ROBERTSON — Structural & Civil Engineers

PROJECT THE WORLD TRADE CENTER | TITLE DETAIL OF BEAMS ADJACENT TO ESCALATOR | DATE 9-13-68

REVISIONS

5-29-69

2-11-70

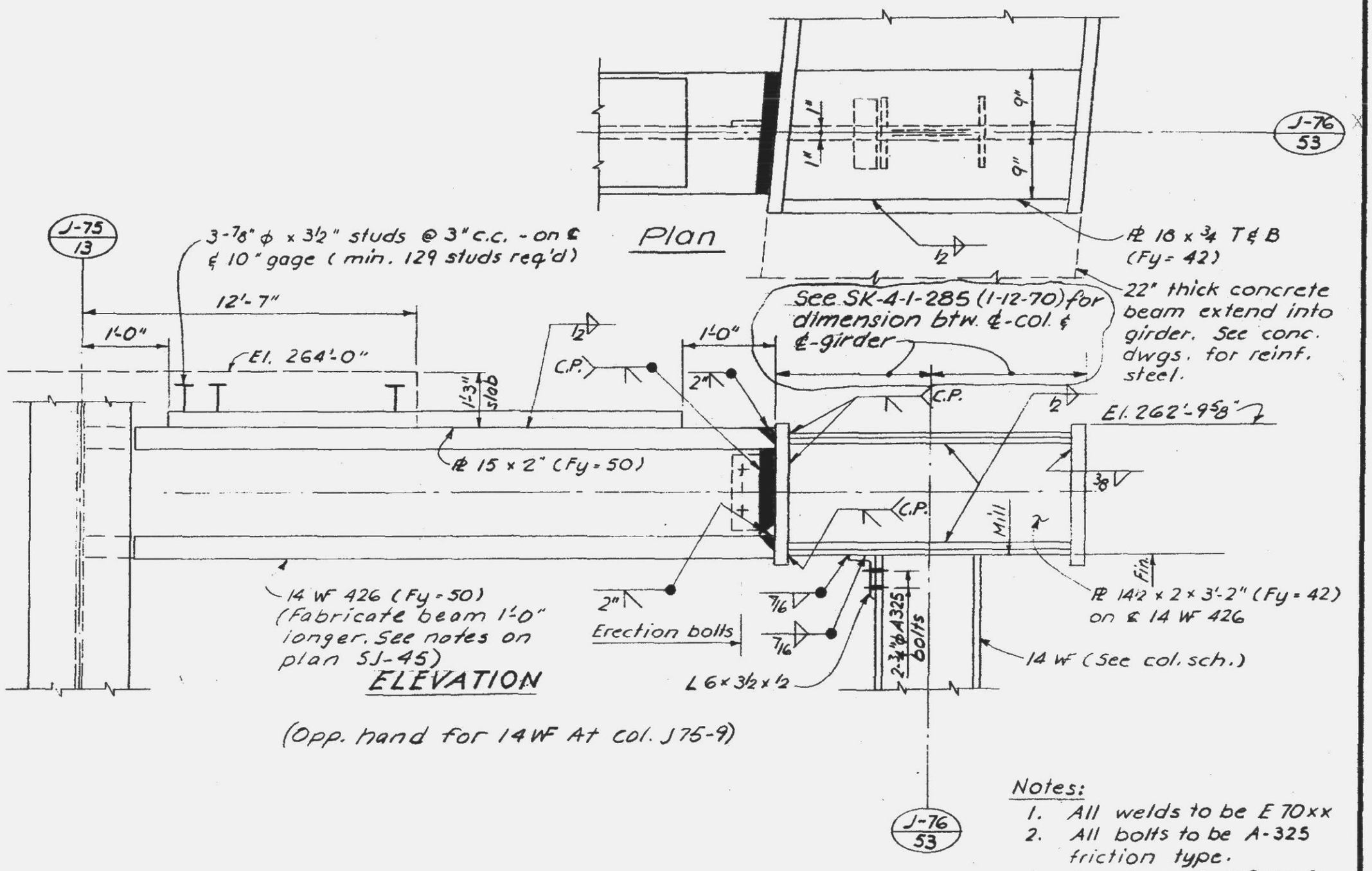

(Opp. hand for 14WF At col. J75-9)

Notes:

1. All welds to be E 70xx
2. All bolts to be A-325 friction type.
3. See dwg. 12-JK2-152 for horizontal girder.
4. See also, Dwg SK-4-1-285 (1-12-70) (Change No. 533.061)

LICENSED PROFESSIONAL ENGINEER — LESLIE E. ROBERTSON — No. 34360 — UNIVERSITY OF THE STATE OF NEW YORK

DESIGNED

DRAWN S.C.

REVIEWED E.L.

12-JK2-153

SKILLING, HELLE, CHRISTIANSEN, ROBERTSON — Structural & Civil Engineers

PROJECT: THE WORLD TRADE CENTER | TITLE: DETAIL OF BEAMS ADJACENT TO STAIRWAY | DATE: 9-13-68

REVISIONS

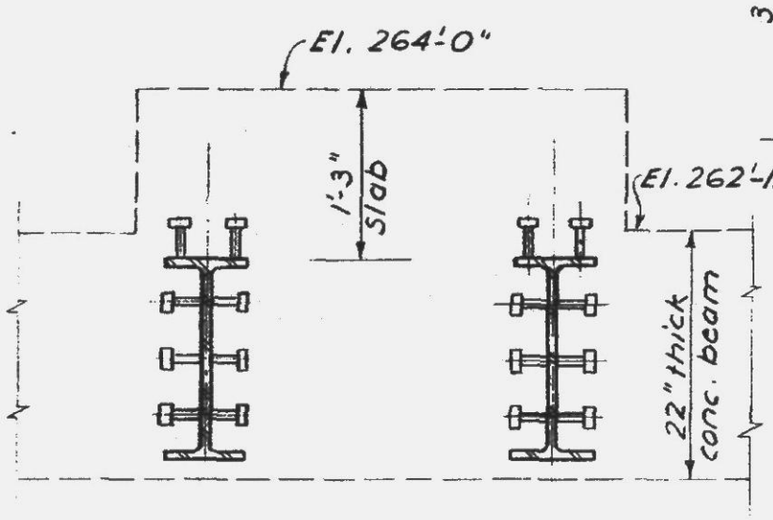

Section a-a

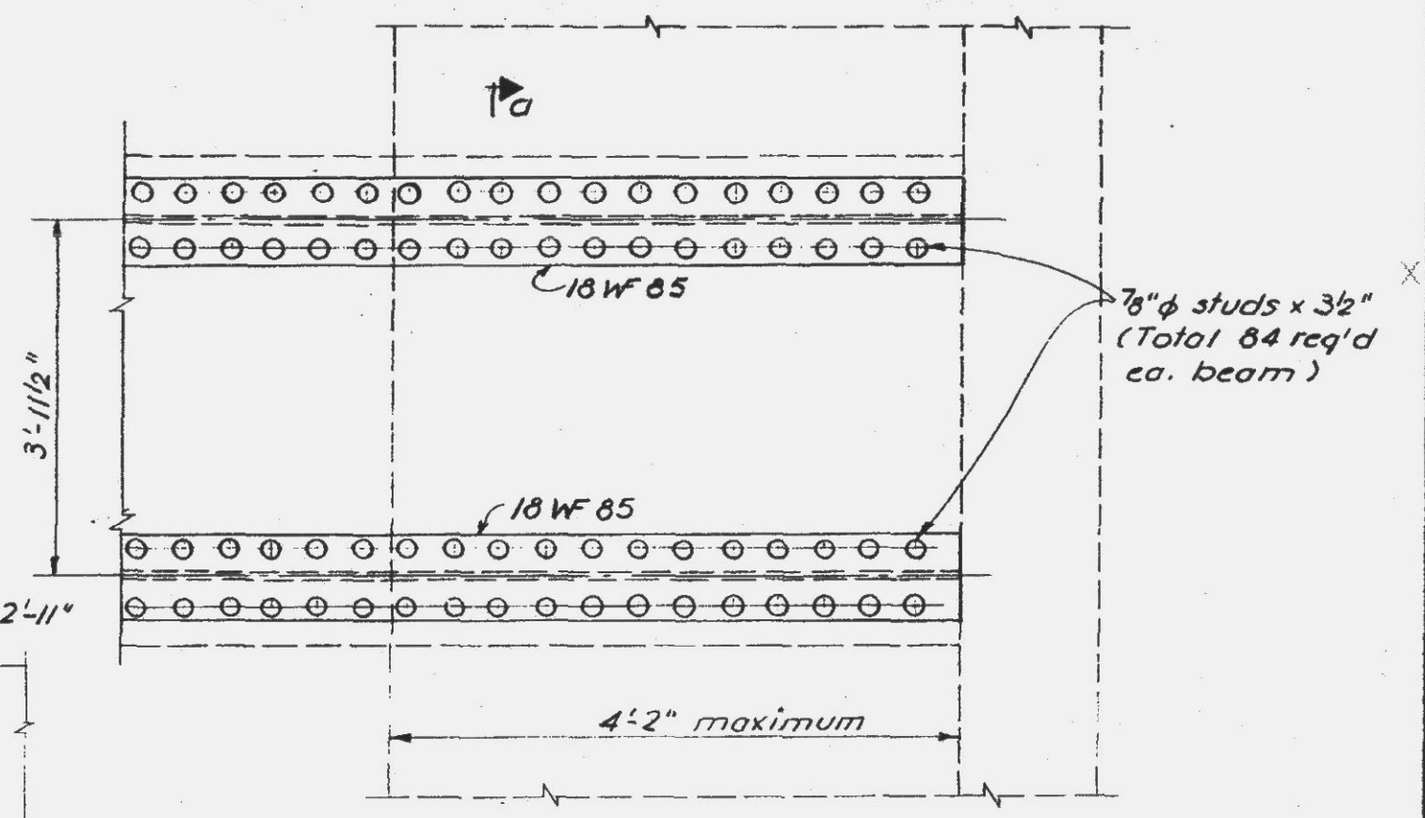

Plan

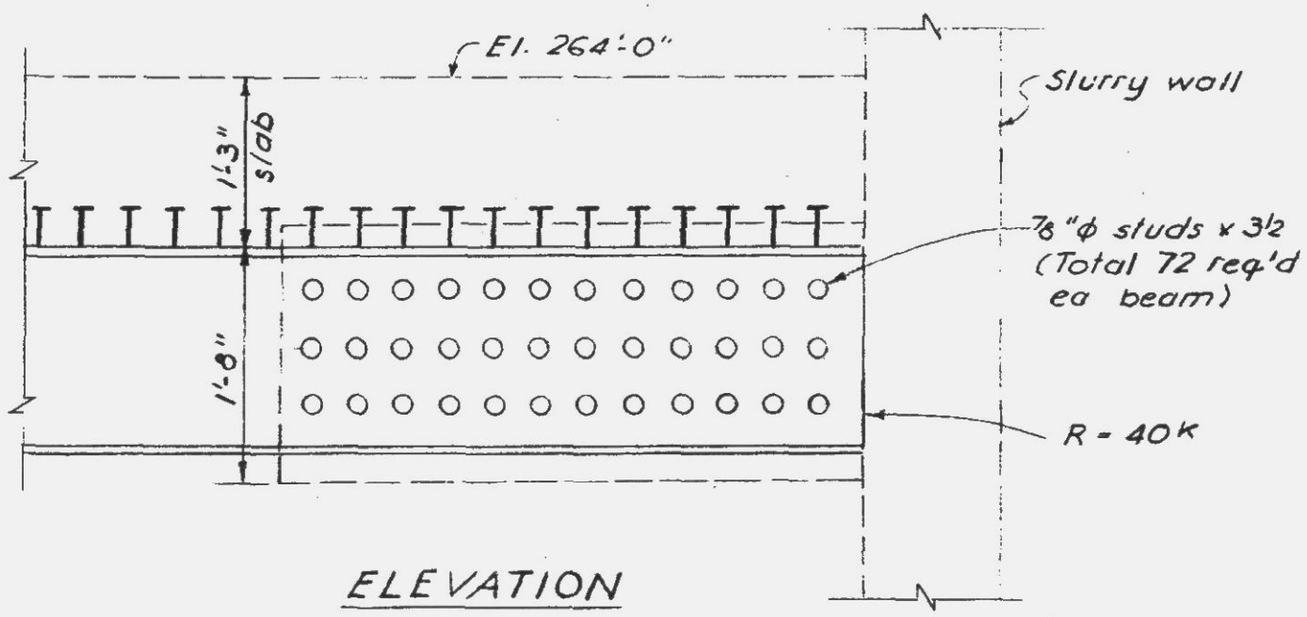

ELEVATION

Notes:
1. Fabricate beams one foot longer. See notes on SJ-45.

LICENSED PROFESSIONAL ENGINEER — LESLIE E. ROBERTSON — No. 34360 — UNIVERSITY OF THE STATE OF NEW YORK

DESIGNED

DRAWN

REVIEWED

12-JK2-154

SKILLING, HELLE, CHRISTIANSEN, ROBERTSON — Structural & Civil Engineers

PROJECT: THE WORLD TRADE CENTER | TITLE: DETAIL OF PLATE GIRDER | DATE: 9-15-66

REVISIONS
1-8-69

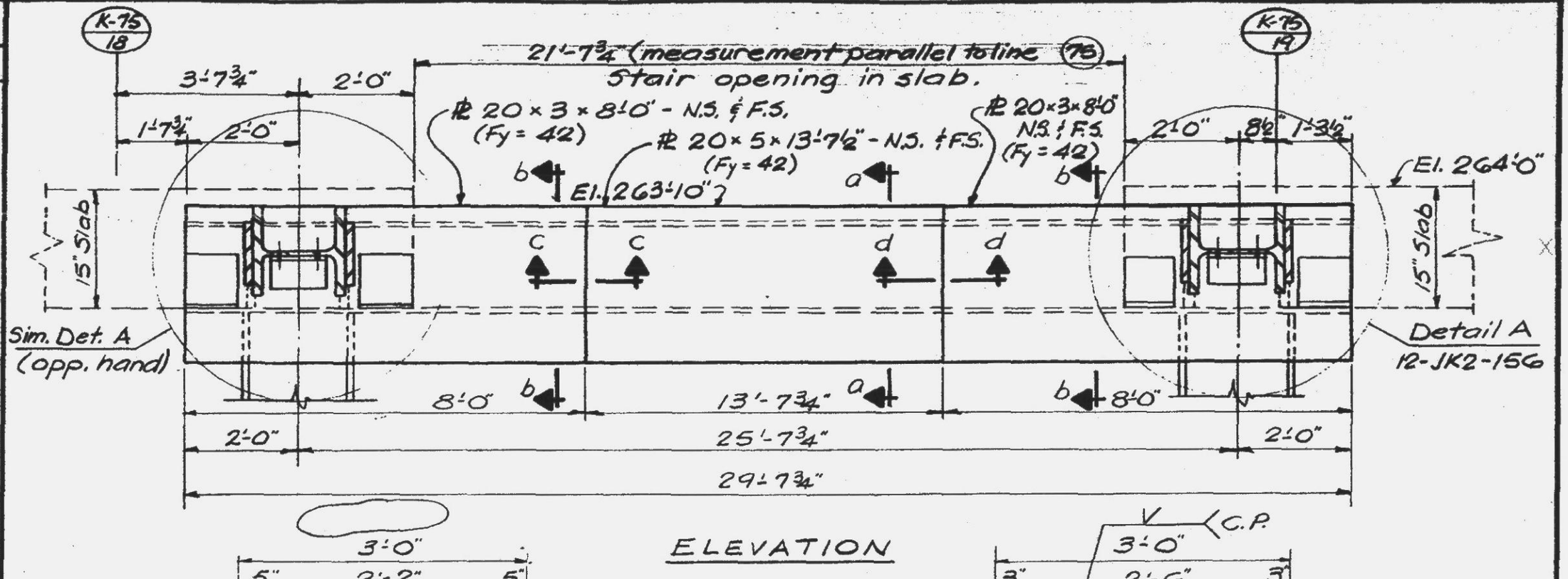

ELEVATION

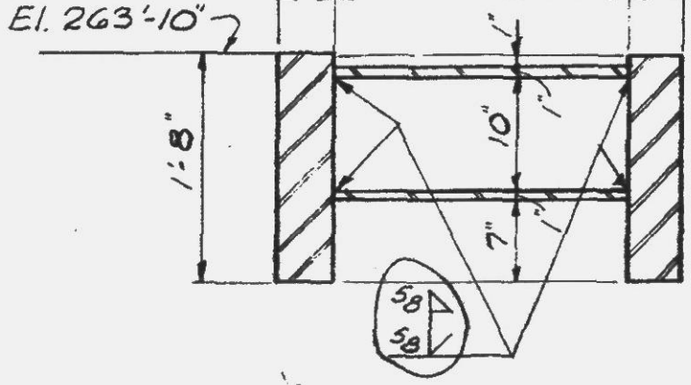

SECTION a-a
(All material, Fy = 42)

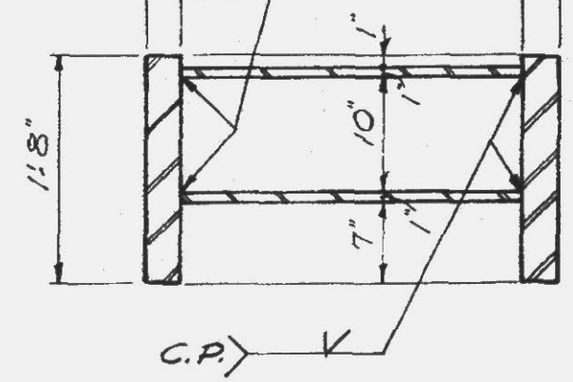

SECTION b-b
(All materials, Fy = 42)

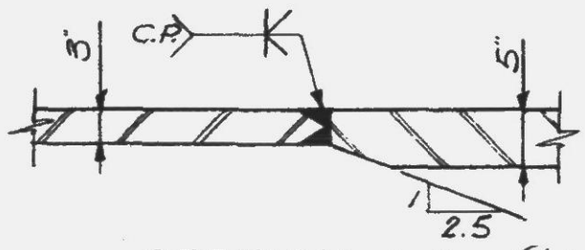

SECTION c-c (As shown)

SECTION d-d (Opp. hand)

Notes :
1. All welds to be E70XX
2. All bolts to be A325 friction type.

LICENSED PROFESSIONAL ENGINEER — LESLIE E. ROBERTSON — No. 34360 — UNIVERSITY OF THE STATE OF NEW YORK

DESIGNED

DRAWN A.F.

REVIEWED E.L.

12-JK2-155

SKILLING, HELLE, CHRISTIANSEN, ROBERTSON — Structural & Civil Engineers

PROJECT THE WORLD TRADE CENTER | TITLE DETAIL OF PLATE GIRDER | DATE 9-18-68

REVISIONS

11-5-69 R

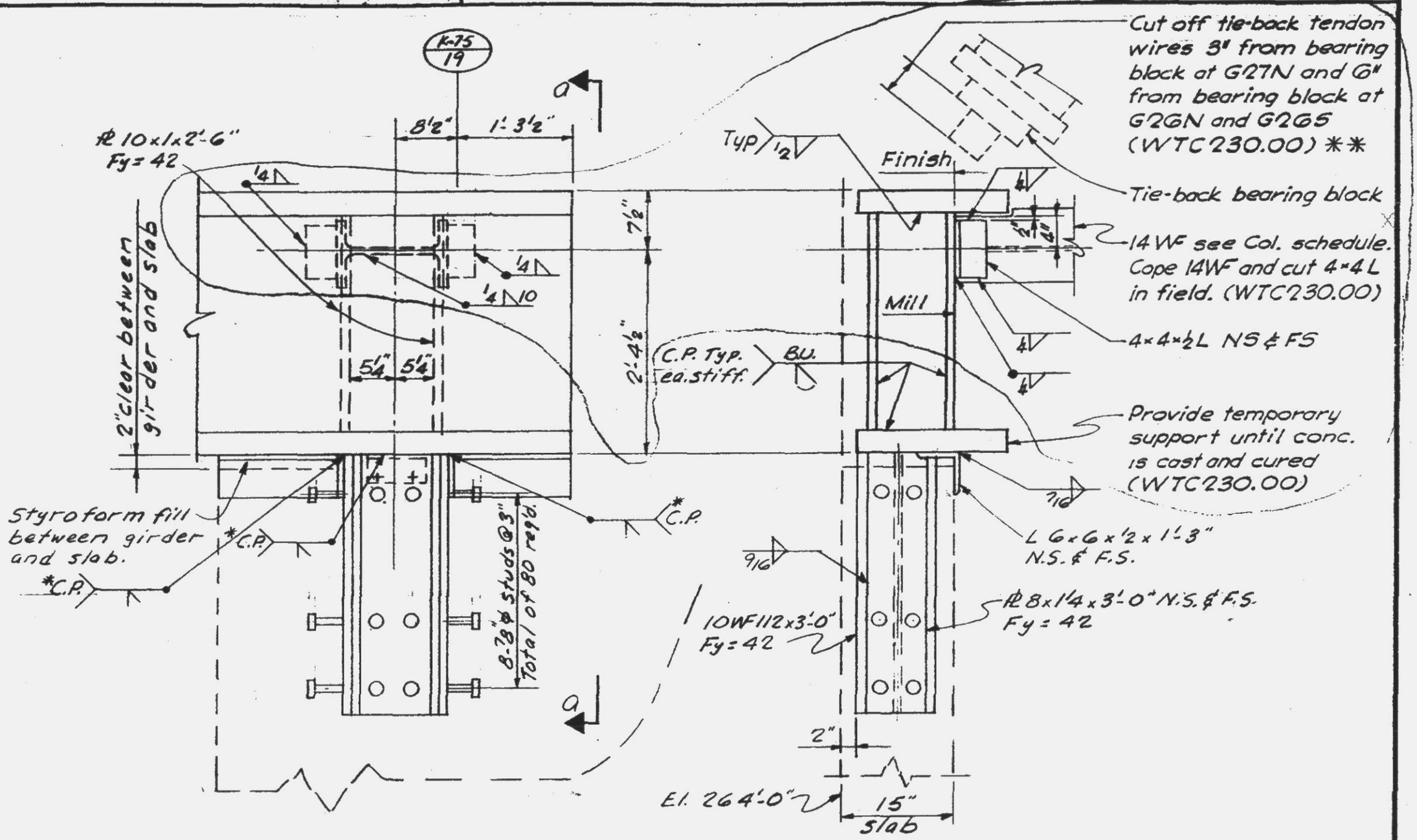

PLAN

Section a-a

*- Shop weld at contractor's option.

**- Cutting procedure shall avoid excess heat in tendon wires.

Note:
1. All welds to be E70 xx.

DETAIL A

LICENSED PROFESSIONAL ENGINEER — LESLIE E. ROBERTSON — No. 34360 — UNIVERSITY OF THE STATE OF NEW YORK

DESIGNED

DRAWN S.C.

REVIEWED E.L.

12-JK2-156

SKILLING, HELLE, CHRISTIANSEN, ROBERTSON — Structural & Civil Engineers

PROJECT THE WORLD TRADE CENTER | TITLE TEMPORARY STRUCTURE | DATE 10-15-68

REVISIONS
11-11-68
12-3-68

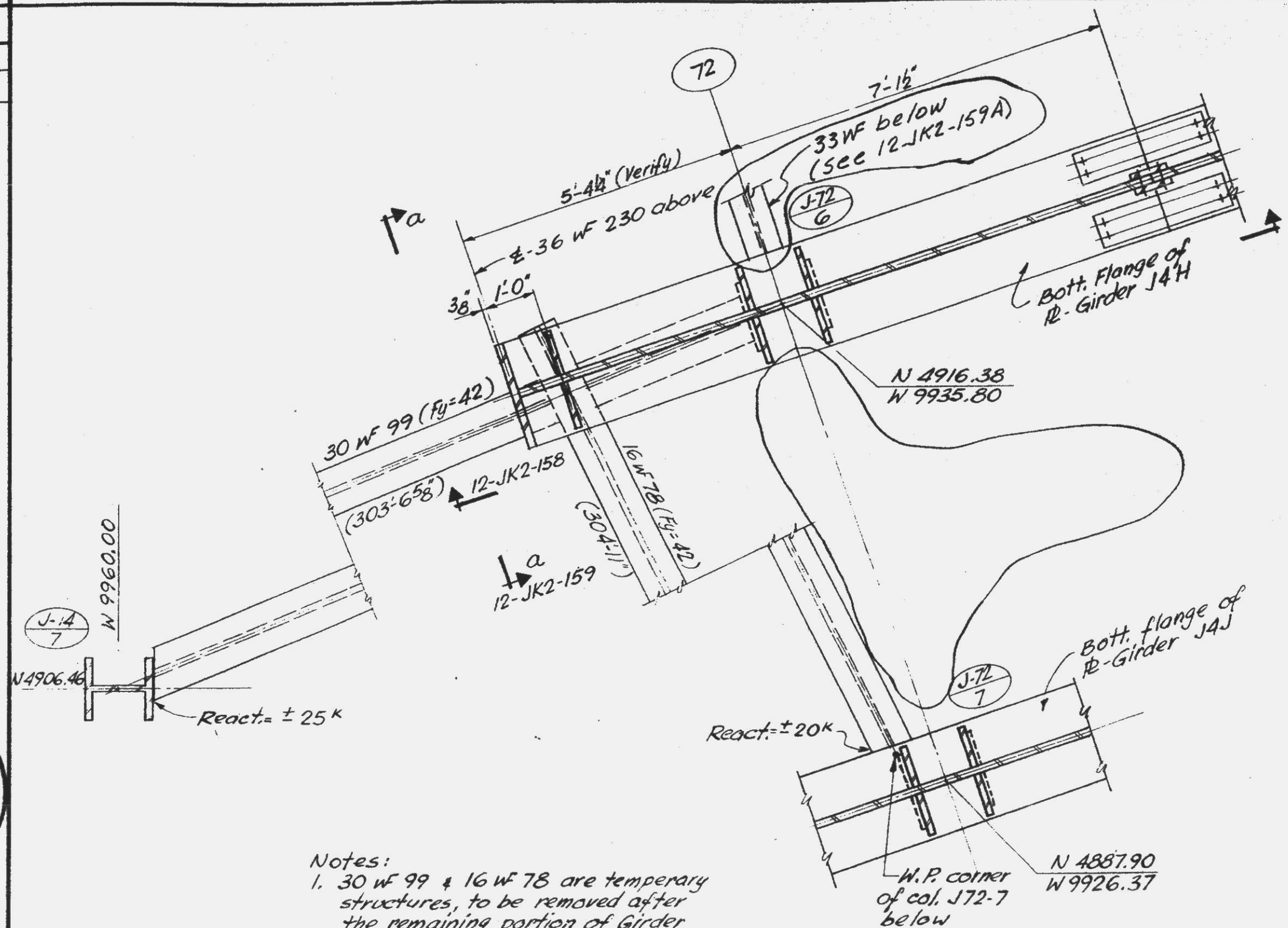

Notes:
1. 30 WF 99 & 16 WF 78 are temperary structures, to be removed after the remaining portion of Girder J4H are properly installed.

LICENSED PROFESSIONAL ENGINEER — LESLIE E. ROBERTSON — No. 34360 — UNIVERSITY OF THE STATE OF NEW YORK

DESIGNED
DRAWN
REVIEWED

12-JK2-157

SKILLING, HELLE, CHRISTIANSEN, ROBERTSON — Structural & Civil Engineers

PROJECT: THE WORLD TRADE CENTER | TITLE: TEMPORARY STRUCTURE | DATE: 10-15-68

REVISIONS
1-8-69

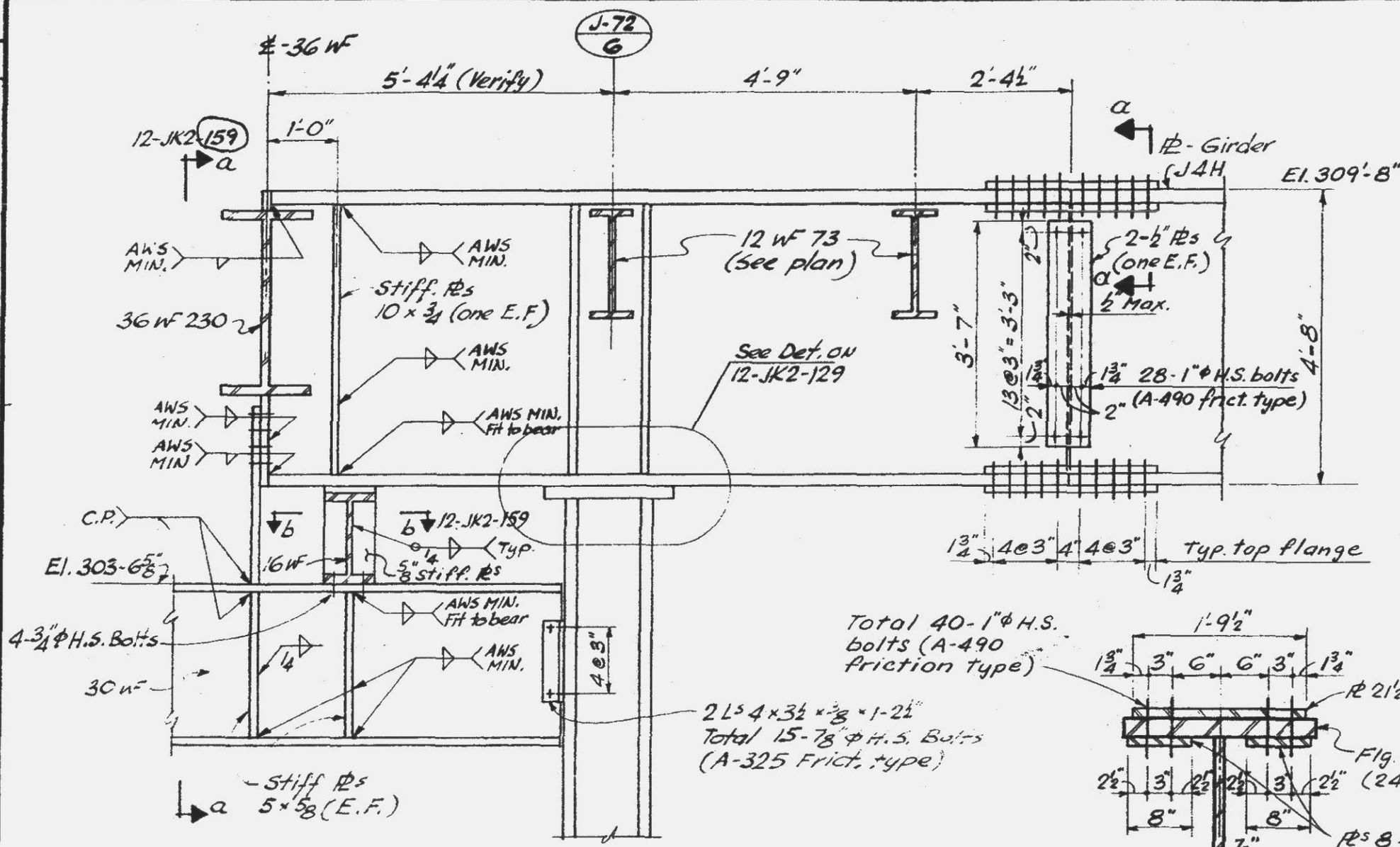

Section a-a
(typ. bottom flange)

Notes:
1. All Pls to have Fy=42 KSI except as noted.
2. All welds to be E70XX.

LICENSED PROFESSIONAL ENGINEER — LESLIE E. ROBERTSON — No. 24360 — UNIVERSITY OF THE STATE OF NEW YORK

DESIGNED

DRAWN A.F.

REVIEWED E.L.

12-JK2-158

SKILLING, HELLE, CHRISTIANSEN, ROBERTSON — Structural & Civil Engineers

PROJECT: THE WORLD TRADE CENTER | TITLE: TEMPORARY STRUCTURE | DATE: 10-15-68

REVISIONS

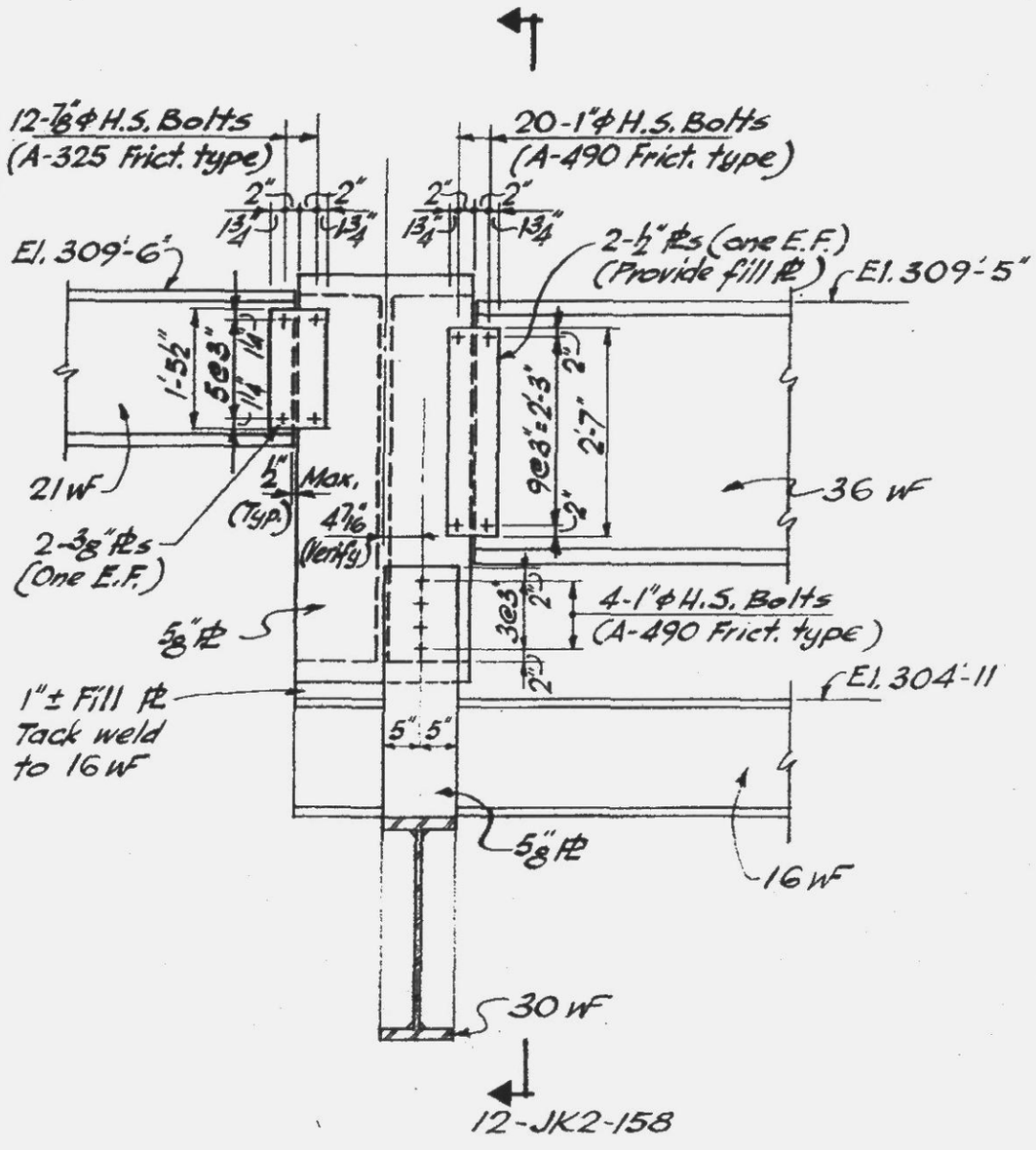

Section a-a

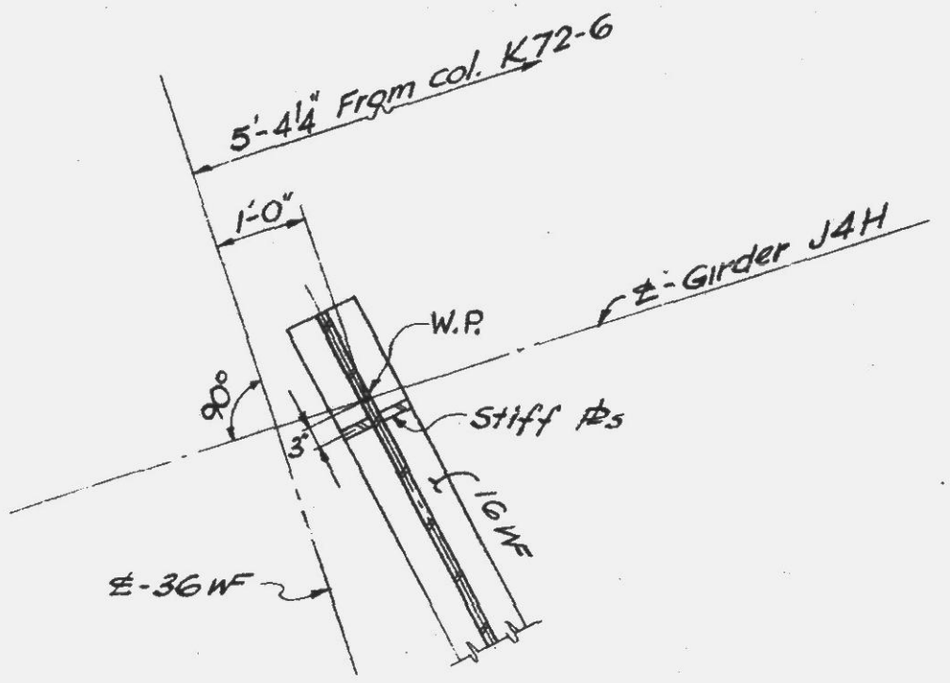

Section b-b

Notes:
1. All PLs to have Fy=42 KSI Except as noted
2. All welds to be E70XX

DESIGNED

DRAWN

REVIEWED

12-JK2-159

DATE 11-11-68

REVISIONS

12-3-68

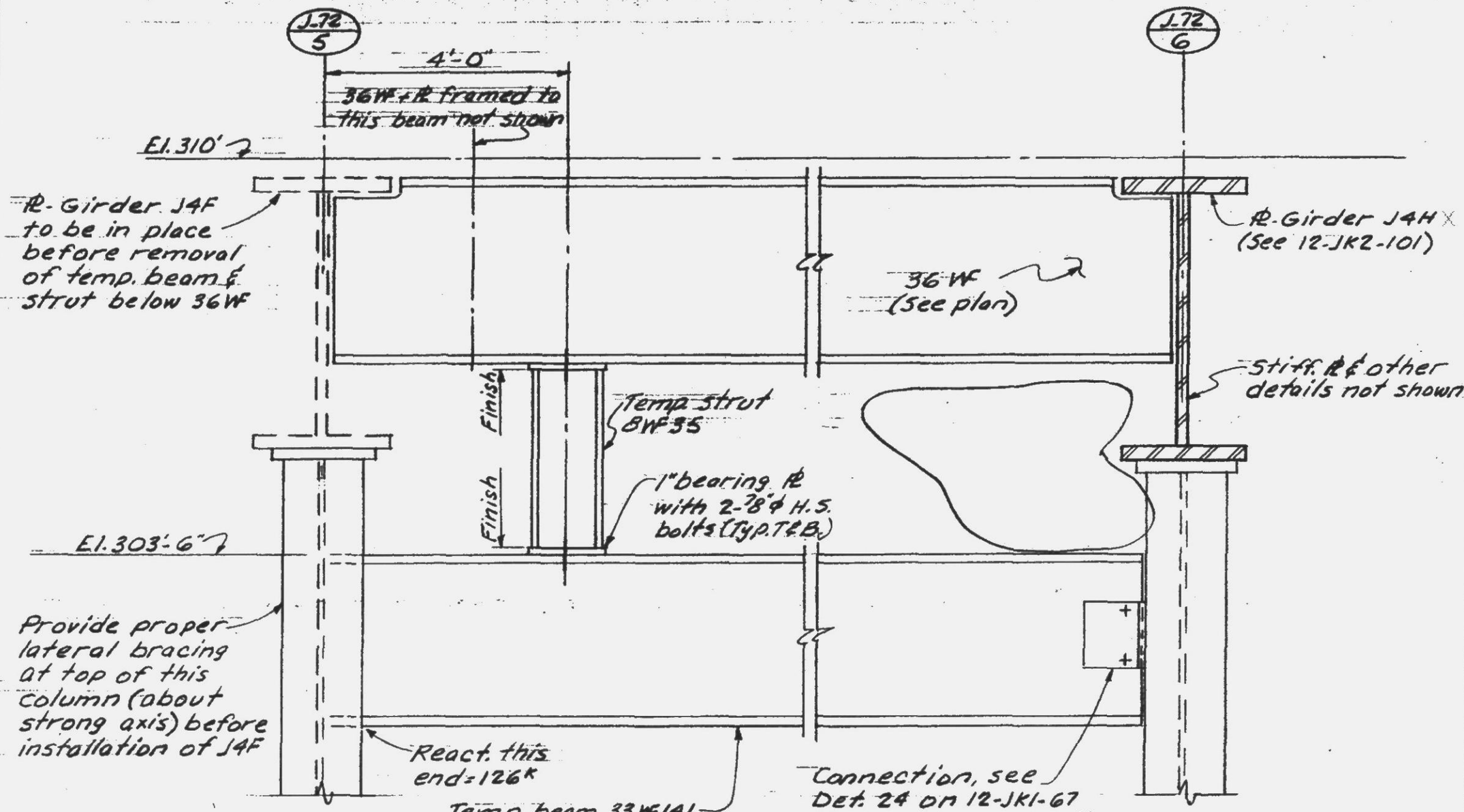

Notes:

1. All bolts to be A-325 friction type.
2. Temp. beam shown is designed for load from El. 310 only. Floor at El. 332 should not be built until 36WF is properly connected to ℄-Girder J4F.

LESLIE E. ROBERTSON — LICENSED PROFESSIONAL ENGINEER — No. 34360 — UNIVERSITY OF THE STATE OF NEW YORK

DESIGNED

DRAWN

REVIEWED

12-JK2-159A

REVISIONS

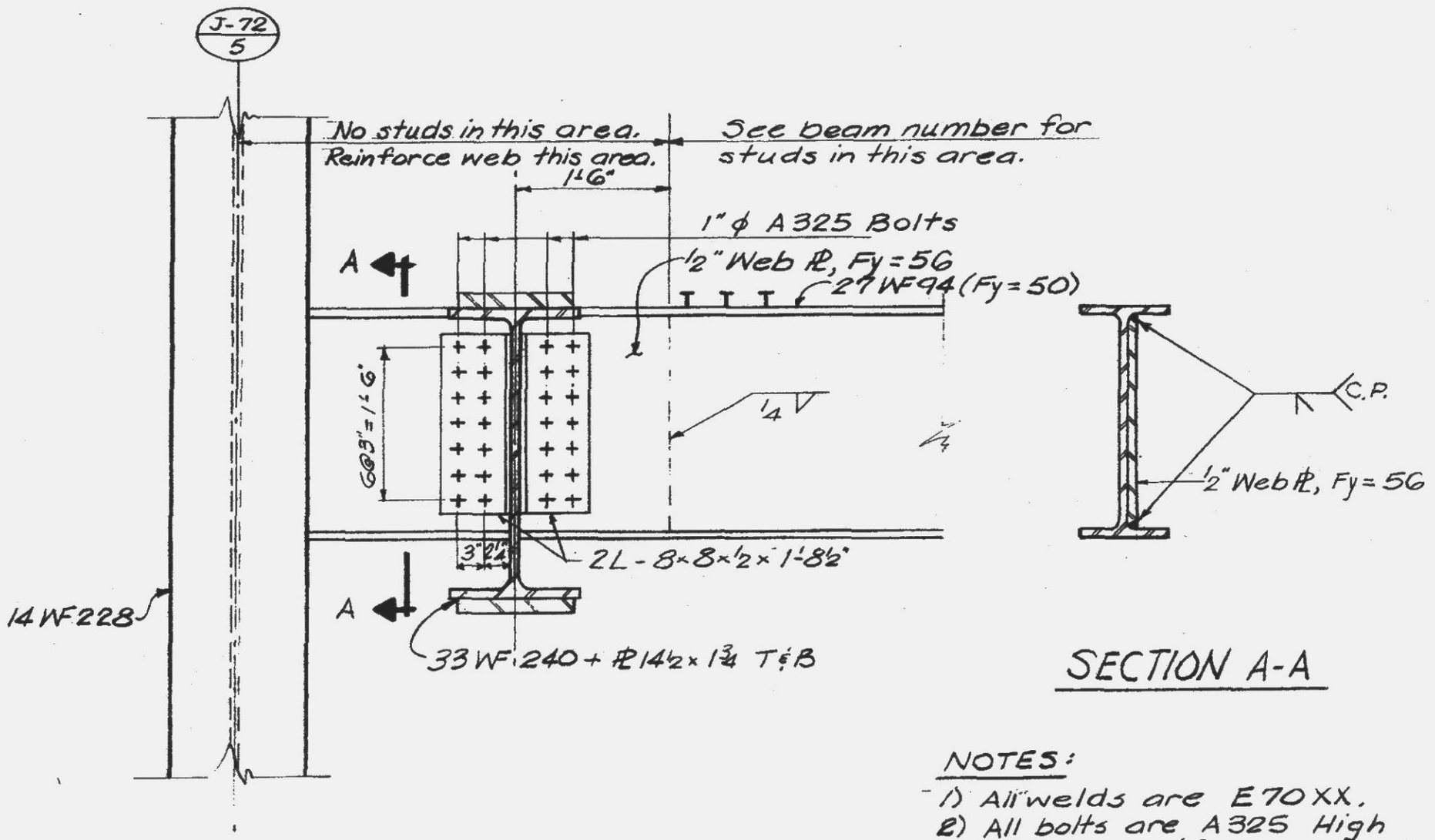

SECTION A-A

NOTES:

1) All welds are E70XX.
2) All bolts are A325 High Strength (friction type).

LICENSED PROFESSIONAL ENGINEER — LESLIE E. ROBERTSON — No. 34360 — UNIVERSITY OF THE STATE OF NEW YORK

DESIGNED

DRAWN

REVIEWED

12-JK2-160

SKILLING, HELLE, CHRISTIANSEN, ROBERTSON — Structural & Civil Engineers

PROJECT: THE WORLD TRADE CENTER | TITLE: BEAM DETAIL | DATE: 12-3-68

REVISIONS

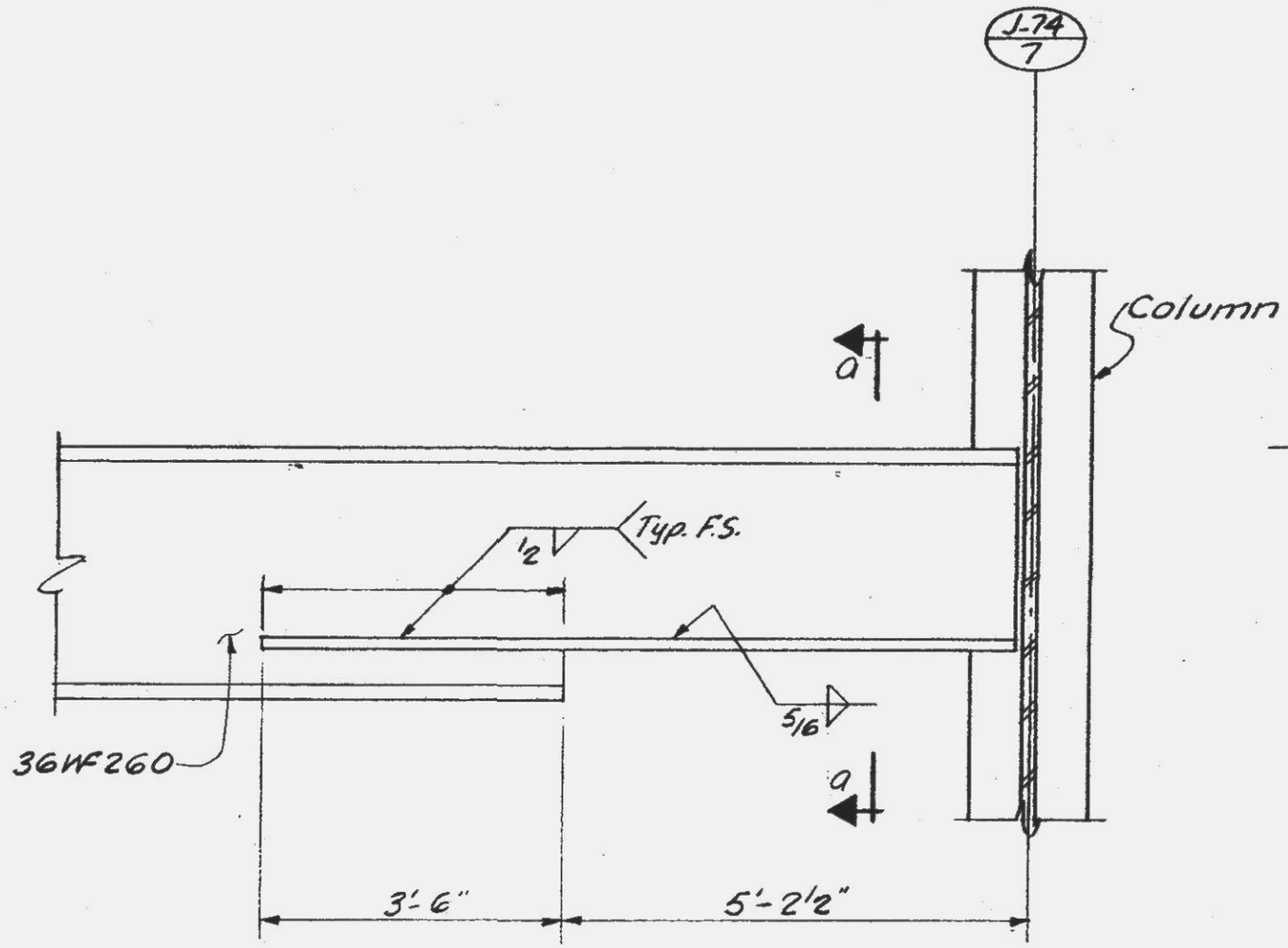

ELEVATION

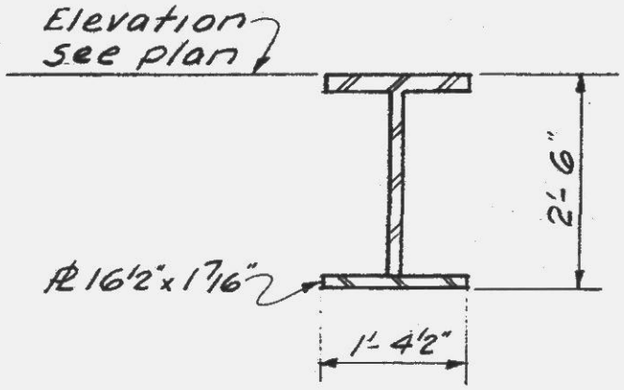

Section a-a

LICENSED PROFESSIONAL ENGINEER
LESLIE E. ROBERTSON
No. 34360
UNIVERSITY OF THE STATE OF NEW YORK

DESIGNED

DRAWN

REVIEWED

12-JK2-161

SKILLING, HELLE, CHRISTIANSEN, ROBERTSON — Structural & Civil Engineers

PROJECT: THE WORLD TRADE CENTER | TITLE: BEAM DETAILS | DATE: 11-27-68

REVISIONS

6-19-69

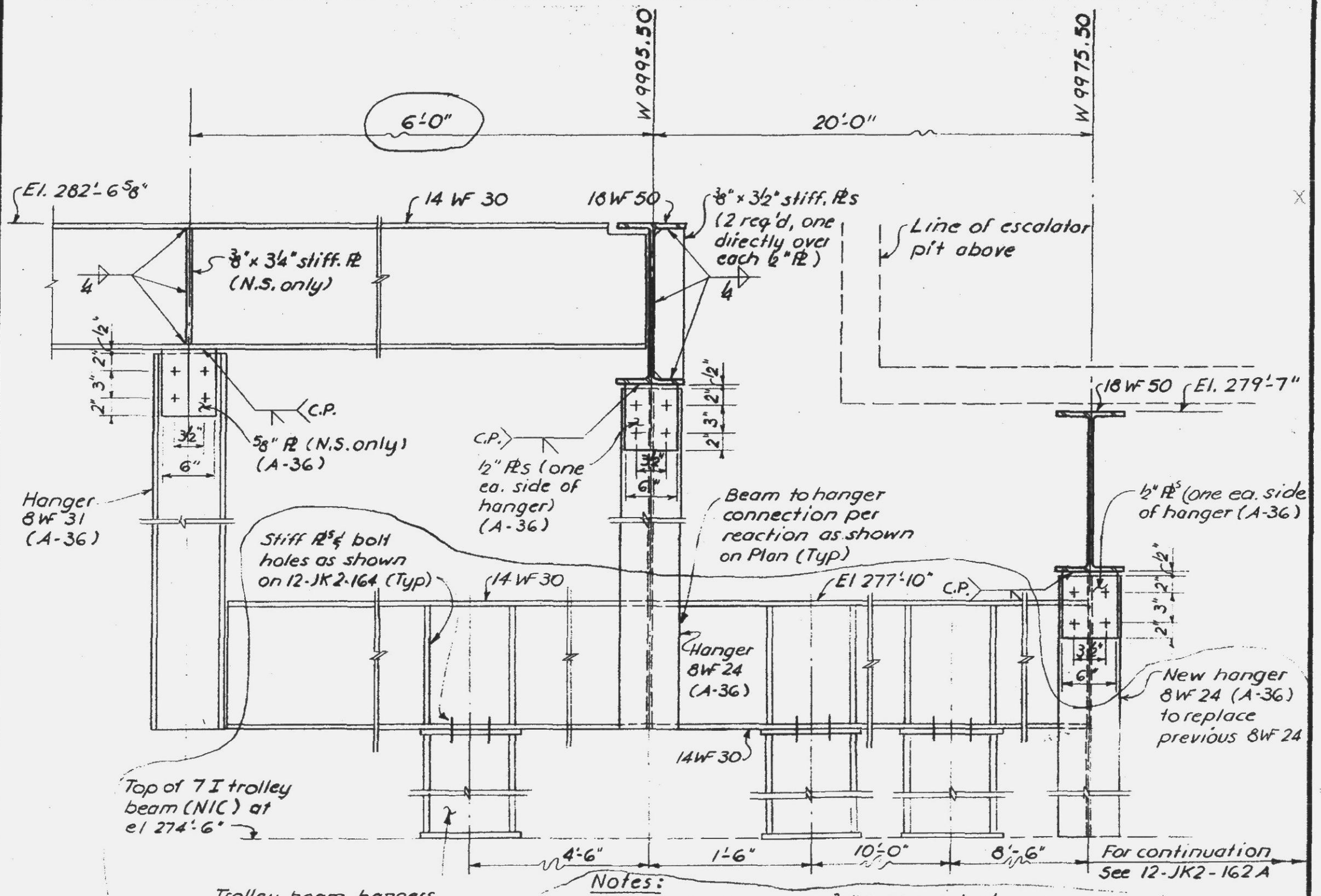

Notes:

1. All bolts to be 3/4" ϕ H.S. friction type.
2. All welds to be E70XX.
3. See 12-JK2-164 for typical detail of supports for future trolley beams.
4. Allow 1/8" erection clearance between Pl & hangers. Provide shims if necessary to insure surface contact for friction type H.S. bolts.

LICENSED PROFESSIONAL ENGINEER — LESLIE E. ROBERTSON — No. 34360 — UNIVERSITY OF THE STATE OF NEW YORK

DESIGNED

DRAWN: F. Smith

REVIEWED: E.L.

12-JK2-162

SKILLING, HELLE, CHRISTIANSEN, ROBERTSON — Structural & Civil Engineers

PROJECT: THE WORLD TRADE CENTER | TITLE: BEAM DETAILS | DATE: 6-19-69

REVISIONS

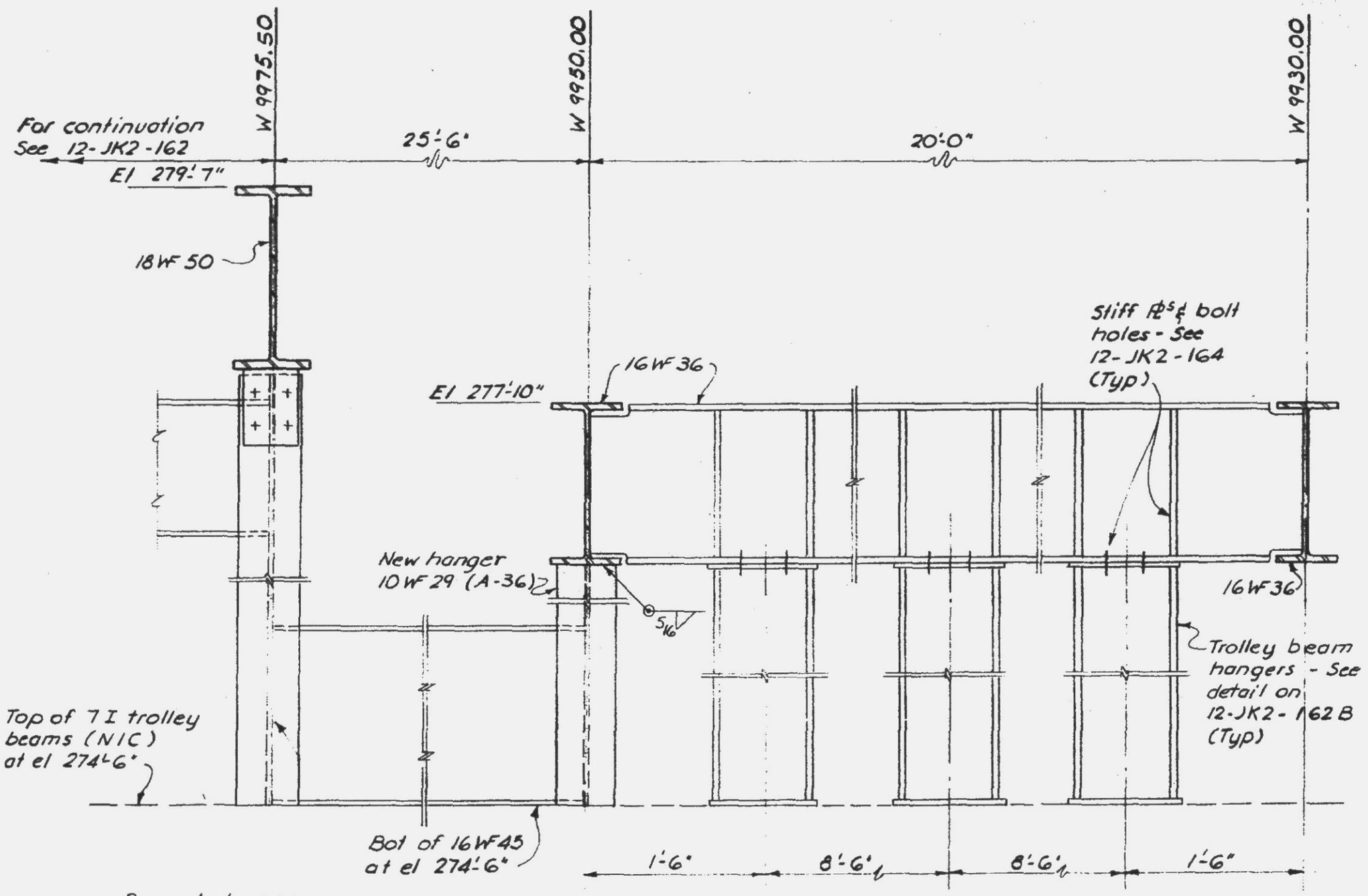

Beam to hanger connection per reaction as shown on Plan (Typ)

See Notes on 12-JK2-162

LICENSED PROFESSIONAL ENGINEER — LESLIE E. ROBERTSON — No. 34360 — UNIVERSITY OF THE STATE OF NEW YORK

DESIGNED

DRAWN: F. Smith

REVIEWED: E.L.

12-JK2-162A

SKILLING, HELLE, CHRISTIANSEN, ROBERTSON — Structural & Civil Engineers

PROJECT THE WORLD TRADE CENTER | TITLE TROLLEY BEAM HANGER DETAILS | DATE 6-19-69

REVISIONS

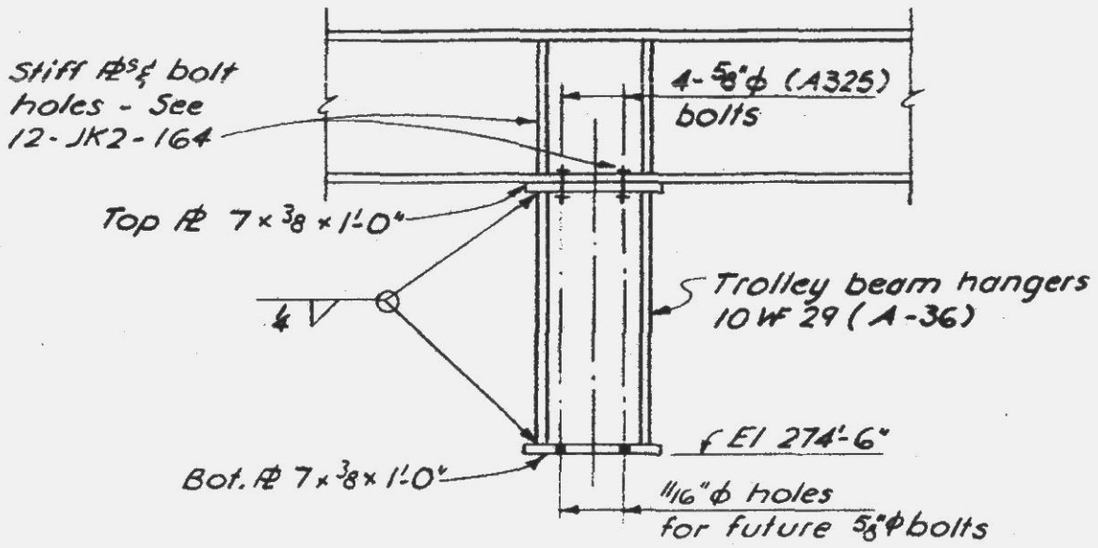

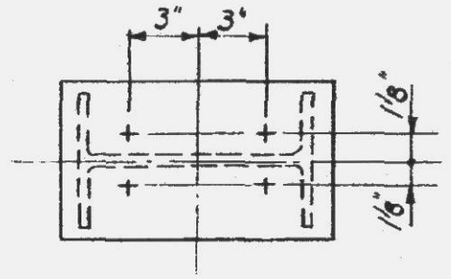

Plan of Bot. Plate

LICENSED PROFESSIONAL ENGINEER
LESLIE E. ROBERTSON
No. 34360
UNIVERSITY OF THE STATE OF NEW YORK

DESIGNED

DRAWN F. Smith

REVIEWED E.L.

12-JK2-162B

SKILLING, HELLE, CHRISTIANSEN, ROBERTSON — Structural & Civil Engineers

PROJECT: THE WORLD TRADE CENTER | TITLE: BEAM DETAILS | DATE: 11-27-68

REVISIONS

1-20-69

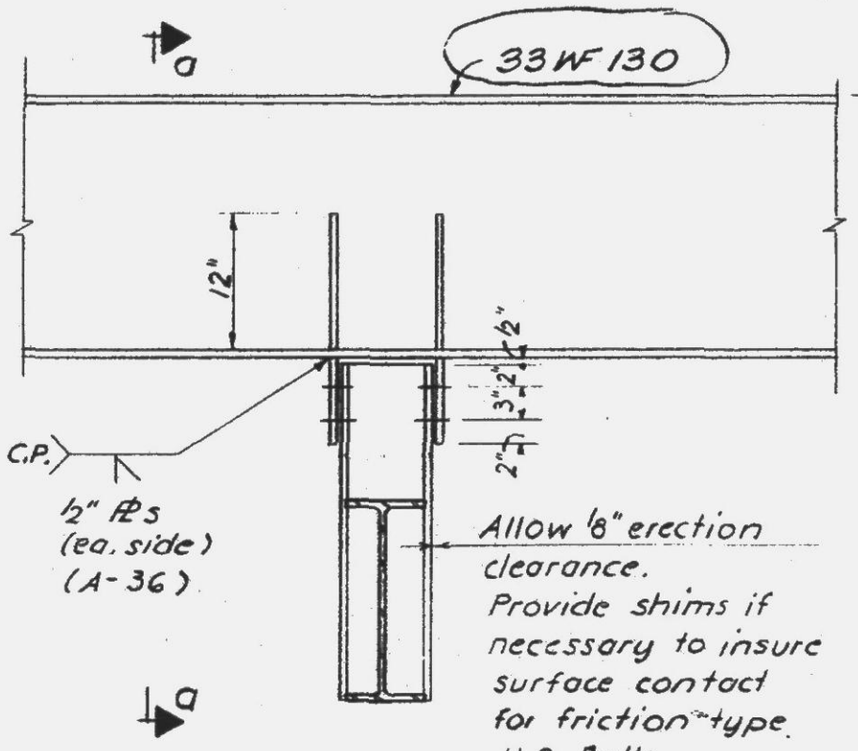

ELEVATION

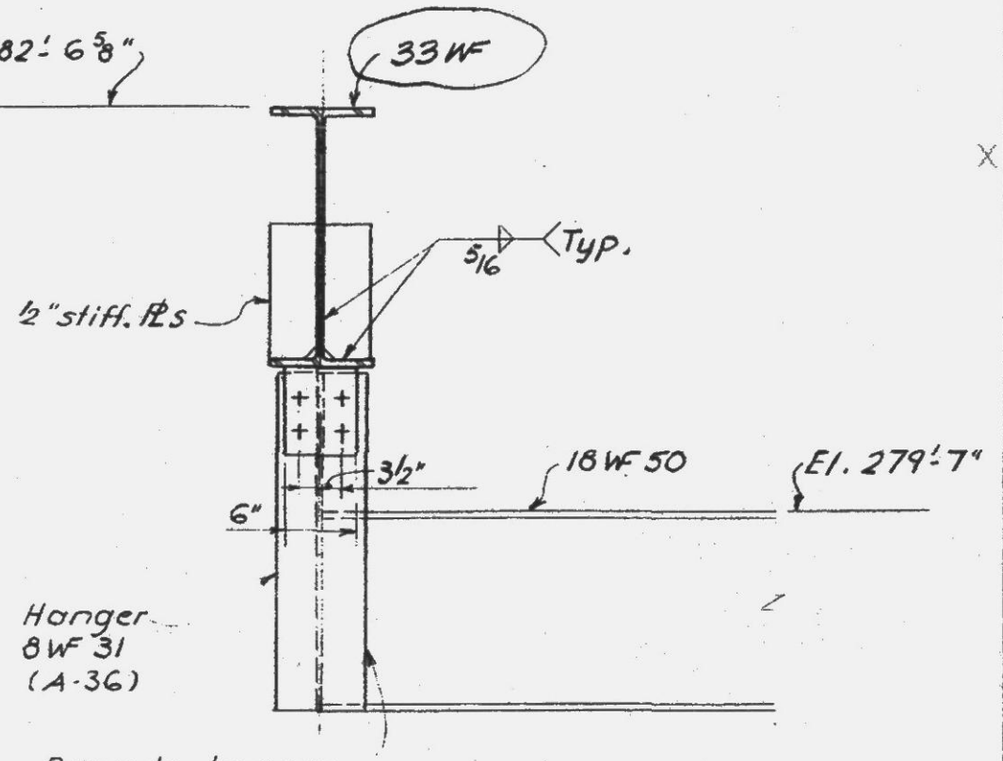

Section a-a

Notes:

1. All bolts to be ¾" ϕ H.S. friction type.
2. All welds to be E 70xx.

LICENSED PROFESSIONAL ENGINEER — LESLIE E. ROBERTSON — No. 34360 — UNIVERSITY OF THE STATE OF NEW YORK

DESIGNED

DRAWN S.C.

REVIEWED E.L.

12-JK2-163

SKILLING, HELLE, CHRISTIANSEN, ROBERTSON — Structural & Civil Engineers

PROJECT: THE WORLD TRADE CENTER | TITLE: BEAM DETAILS | DATE: 11-27-68

REVISIONS

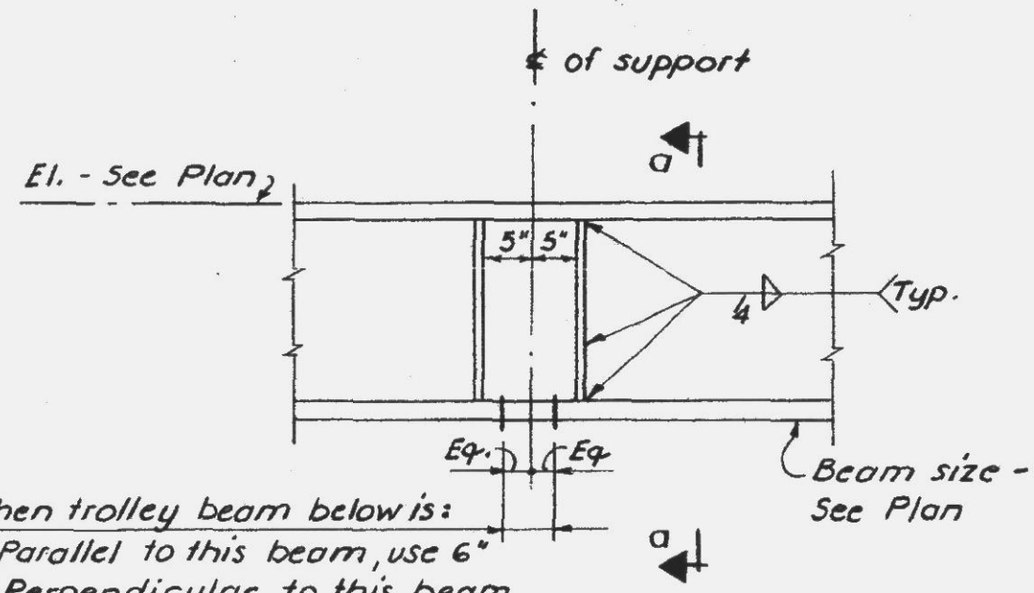

When trolley beam below is:
1. Parallel to this beam, use 6"
2. Perpendicular to this beam use g-value of beam below.

Elevation

(Where other beam frame into this one, see detail below.)

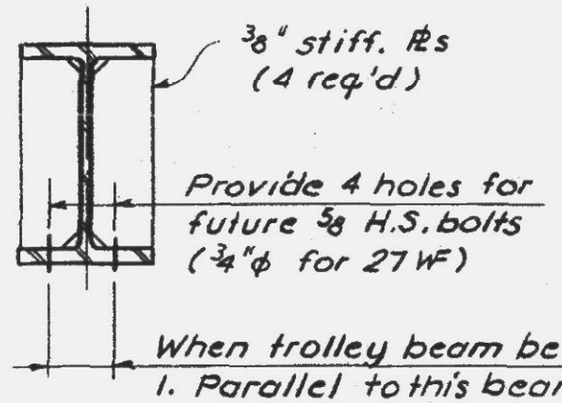

When trolley beam below is:
1. Parallel to this beam, use g-value of beam below.
2. Perpendicular to this beam, use g-value of this beam.

Section a-a

TYPICAL DETAIL OF SUPPORT FOR FUTURE TROLLEY BEAMS

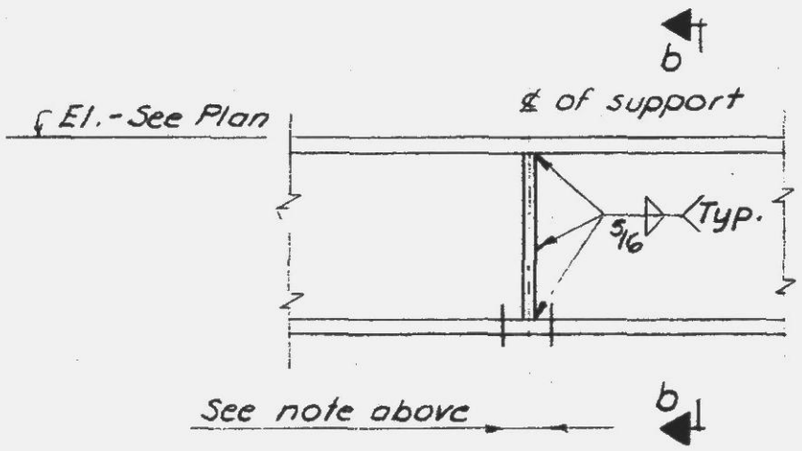

Elevation

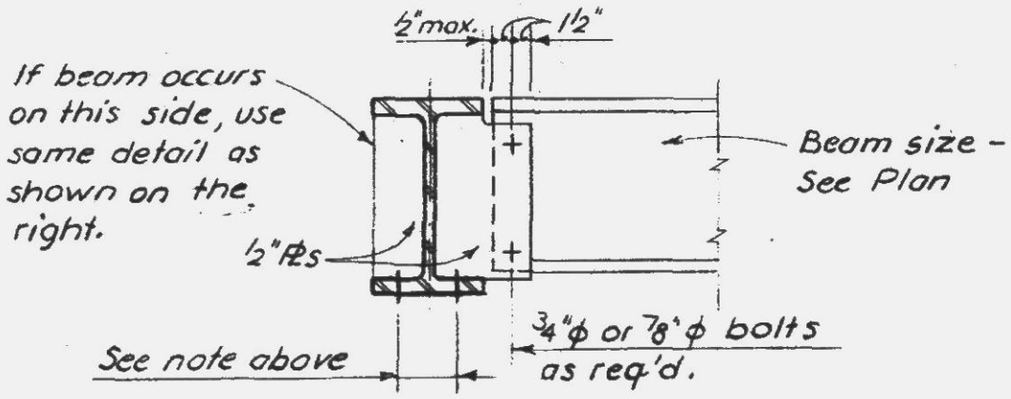

Section b-b

LICENSED PROFESSIONAL ENGINEER — LESLIE E. ROBERTSON — No. 34360 — UNIVERSITY OF THE STATE OF NEW YORK

DESIGNED

DRAWN

REVIEWED

12-JK2-164

SKILLING, HELLE, CHRISTIANSEN, ROBERTSON — Structural & Civil Engineers

PROJECT THE WORLD TRADE CENTER | TITLE DETAIL OF PLATE GIRDER | DATE 12-17-68

REVISIONS

2-19-69

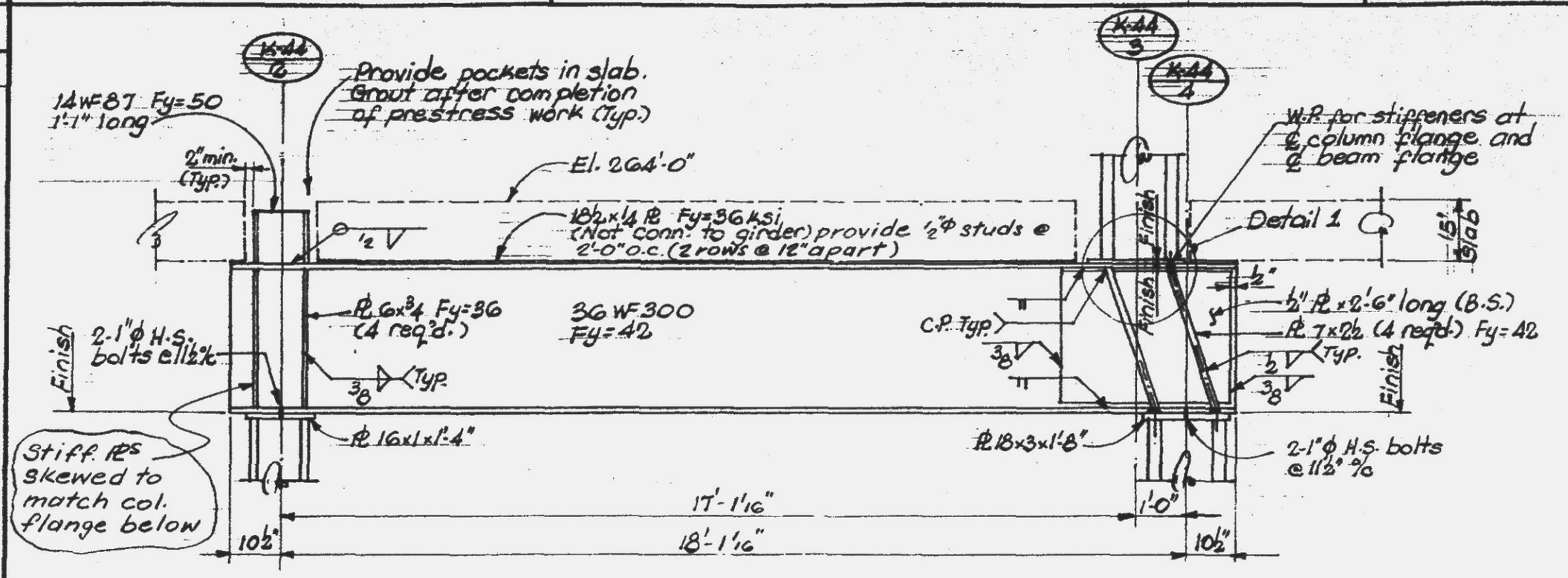

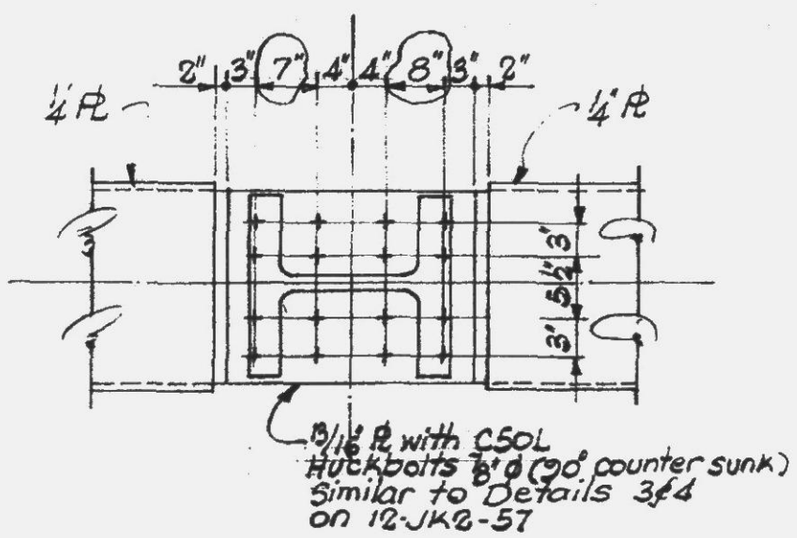

Detail 1

LICENSED PROFESSIONAL ENGINEER — LESLIE E. ROBERTSON — No. 34360 — UNIVERSITY OF THE STATE OF NEW YORK

DESIGNED

DRAWN S.C.

REVIEWED E.L.

12-JK2-165

SKILLING, HELLE, CHRISTIANSEN, ROBERTSON — Civil Engineers

PROJECT THE WORLD TRADE CENTER | TITLE DETAIL OF PLATE GIRDER | DWG. 12-JKZ-166

REVISIONS
1-8-69
4-30-69

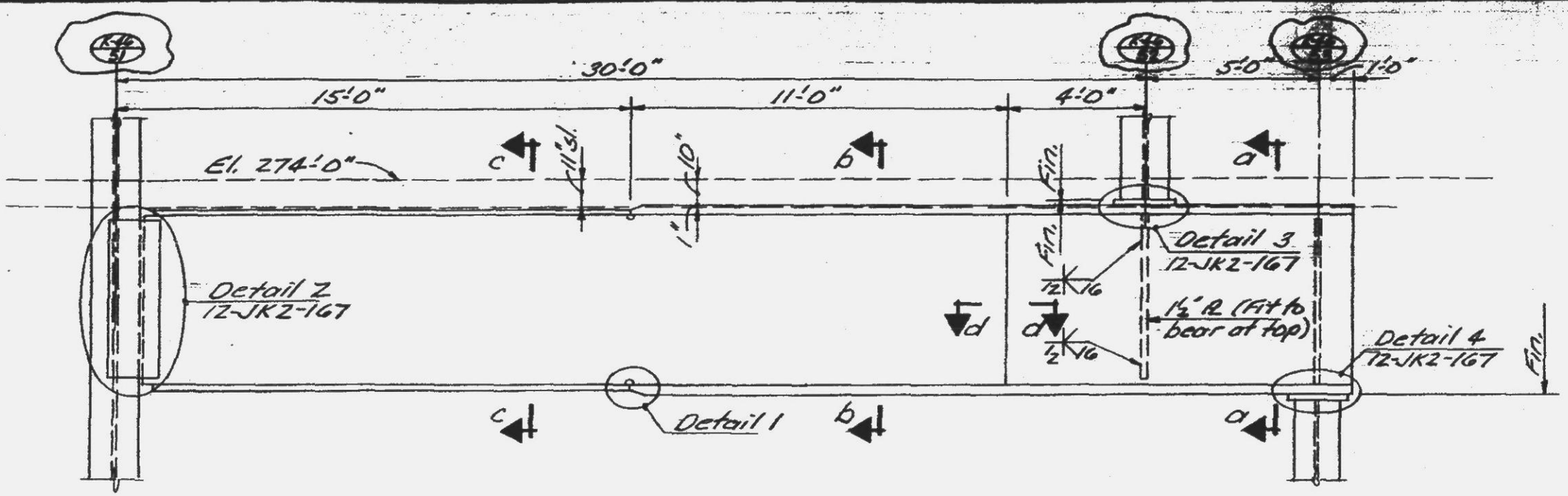

Elevation

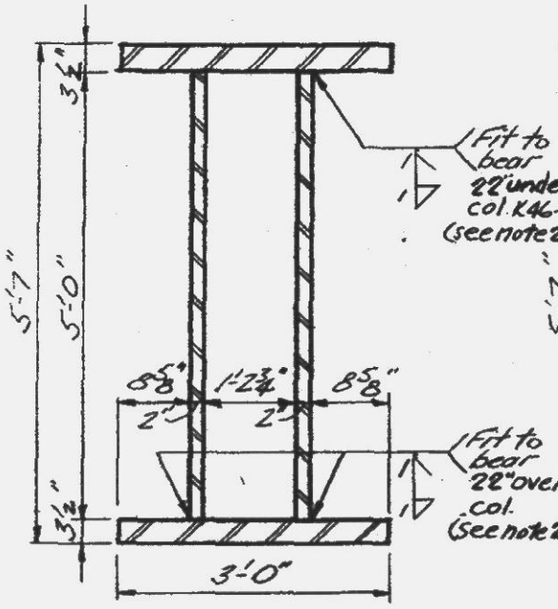

Section a-a

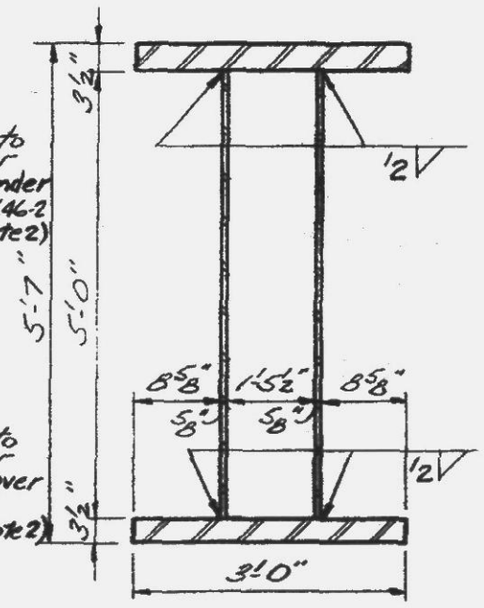

Section b-b

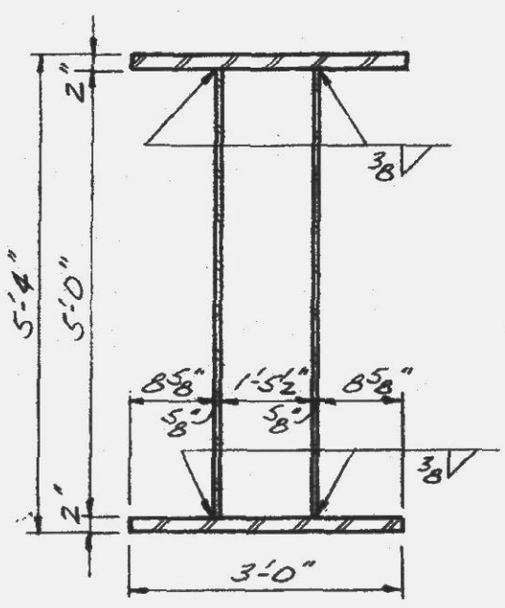

Section c-c

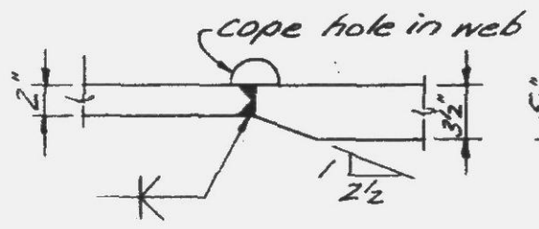

Detail 1

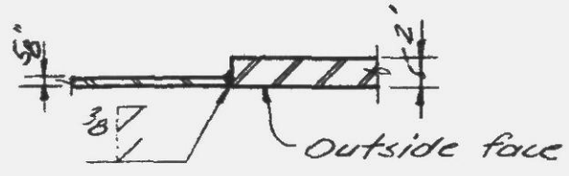

Section d-d

Note:
1. All material to be Fy42.
2. At contractor's option to use complete penetration weld 22" of column.

LICENSED PROFESSIONAL ENGINEER — LESLIE E. ROBERTSON — No. 34360 — UNIVERSITY OF THE STATE OF NEW YORK

DESIGNED

DRAWN A.F.

REVIEWED E.L.

12-JKZ-166

SKILLING, HELLE, CHRISTIANSEN, ROBERTSON — Structural & Civil Engineers

PROJECT: THE WORLD TRADE CENTER

TITLE: DETAIL OF PLATE GIRDER

DATE: 12-17-68

REVISIONS

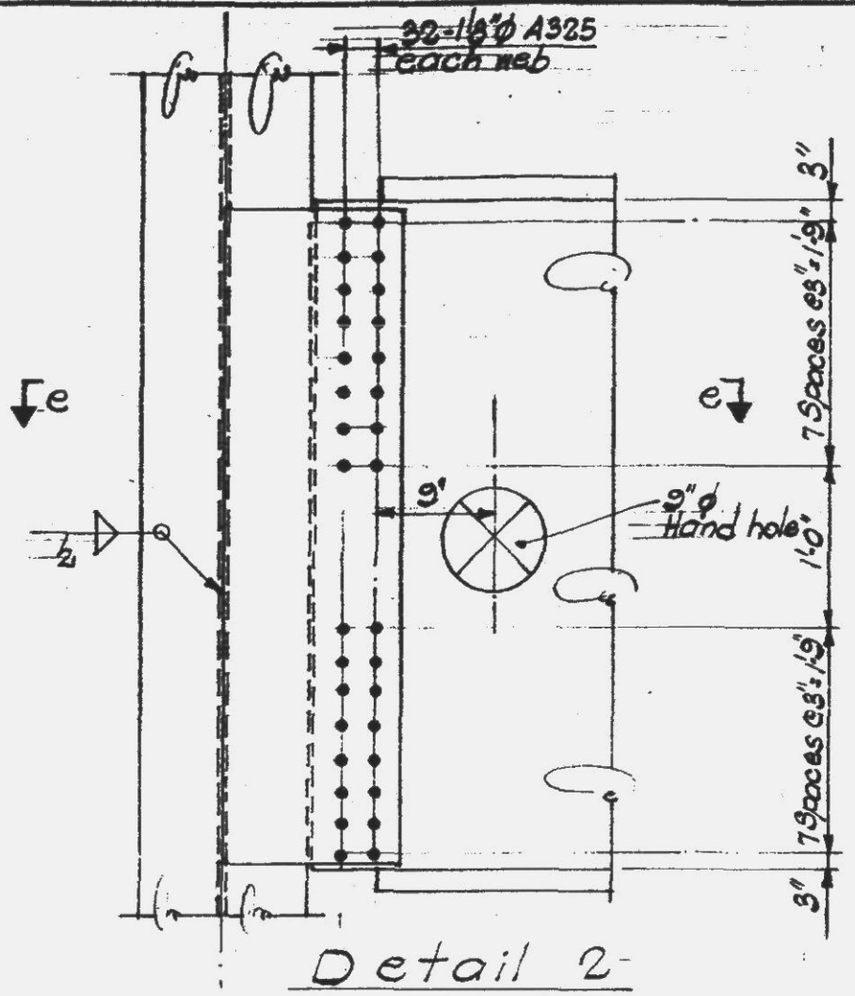

Detail 2-

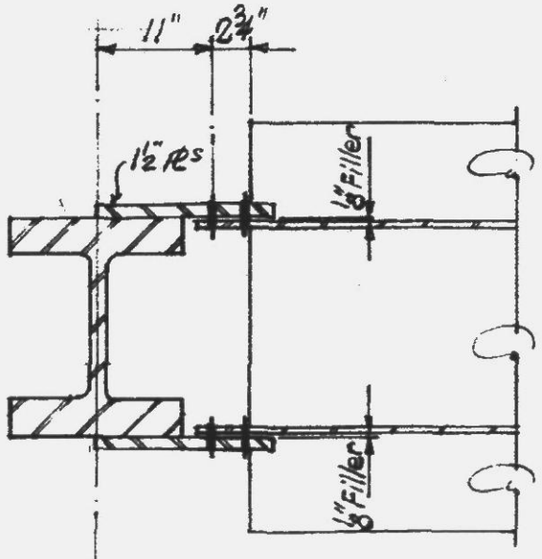

Section e-e

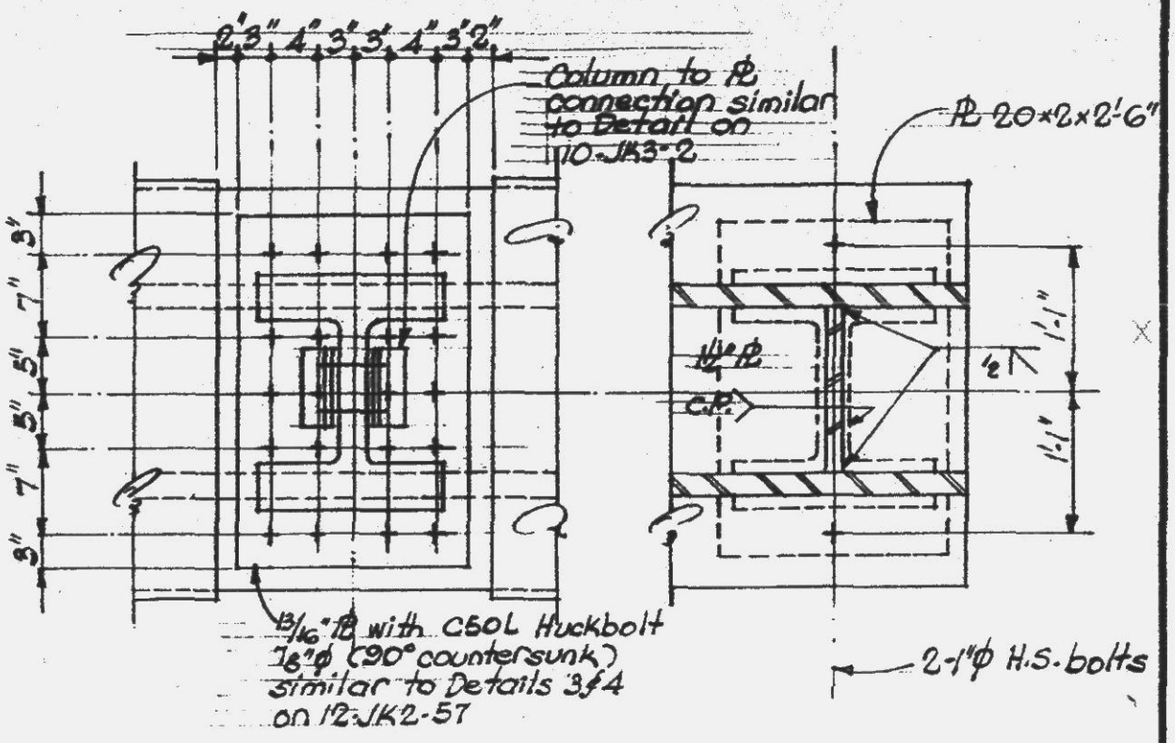

Detail 3

Detail 4

LICENSED PROFESSIONAL ENGINEER
LESLIE E. ROBERTSON
No. 34360
UNIVERSITY OF THE STATE OF NEW YORK

DESIGNED

DRAWN

REVIEWED

12-JK2-167

SKILLING, HELLE, CHRISTIANSEN, ROBERTSON — Structural & Civil Engineers

PROJECT THE WORLD TRADE CENTER | TITLE DETAIL OF PLATE GIRDER | DATE 12-17-68

REVISIONS
2-19-69

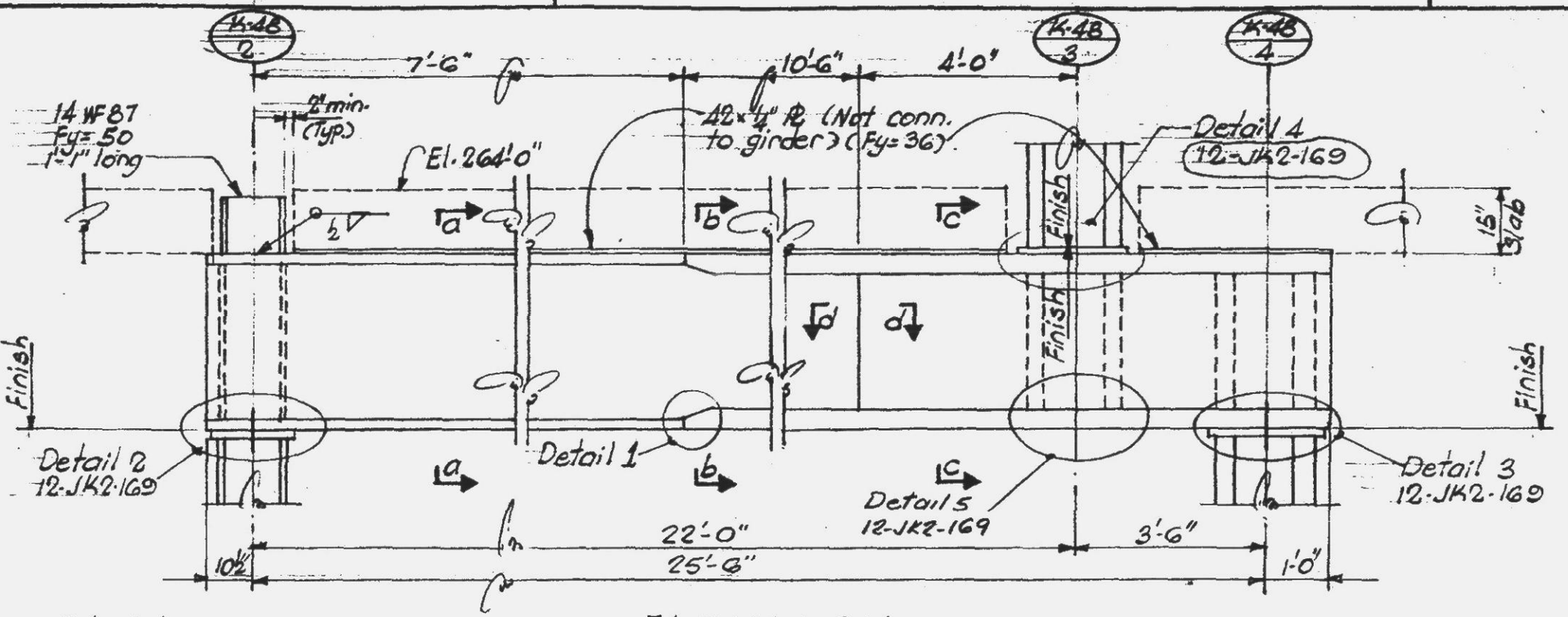

ELEVATION

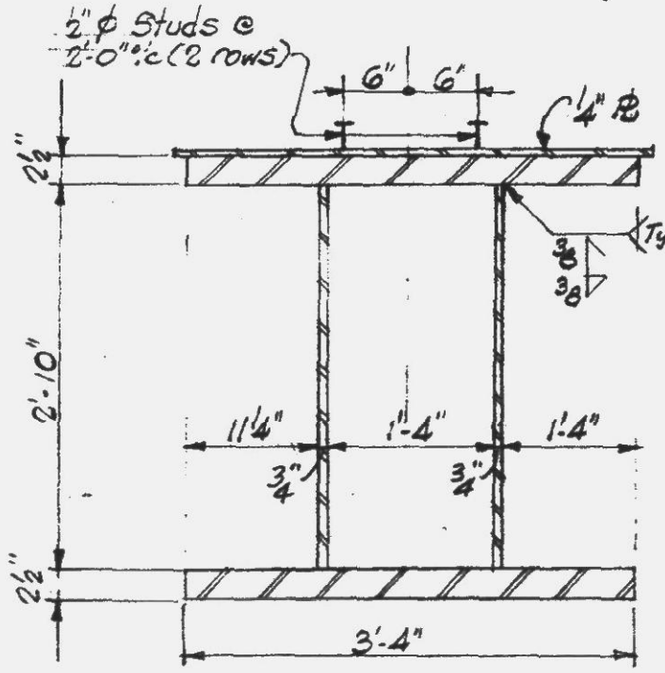

Section a-a

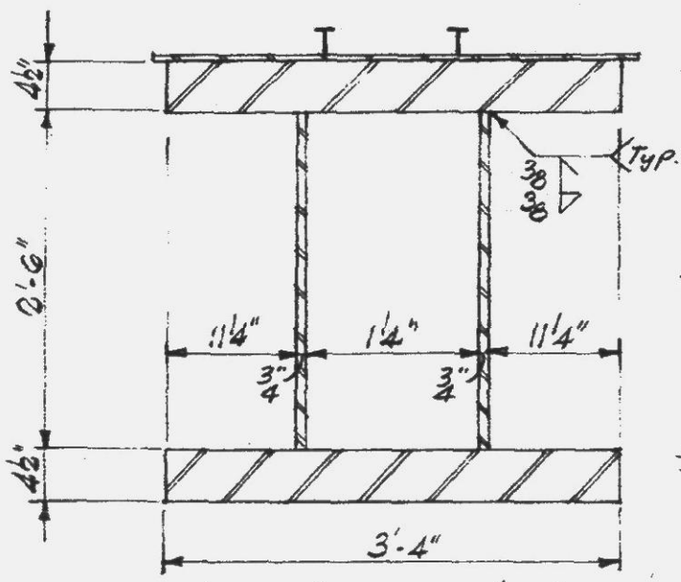

Section b-b

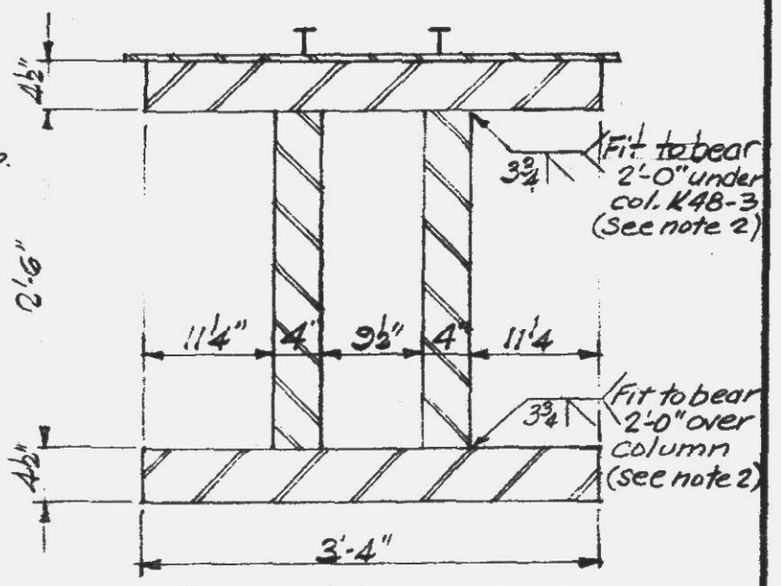

Section c-c

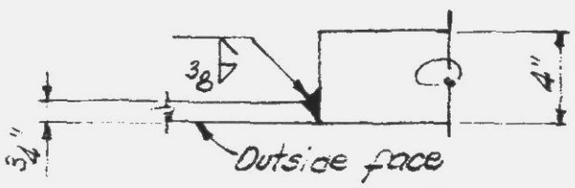

Section d-d

Detail 1

NOTE:
1. All material to be Fy=42 unless noted.
2. At contractor's option to use complete penetration weld 2'-0" at column

DESIGNED
DRAWN S.C.
REVIEWED E.L.

12-JK2-168

SKILLING, HELLE, CHRISTIANSEN, ROBERTSON — Structural & Civil Engineers

PROJECT THE WORLD TRADE CENTER | TITLE DETAIL OF PLATE GIRDER | DATE 12-17-68

REVISIONS

2-19-69

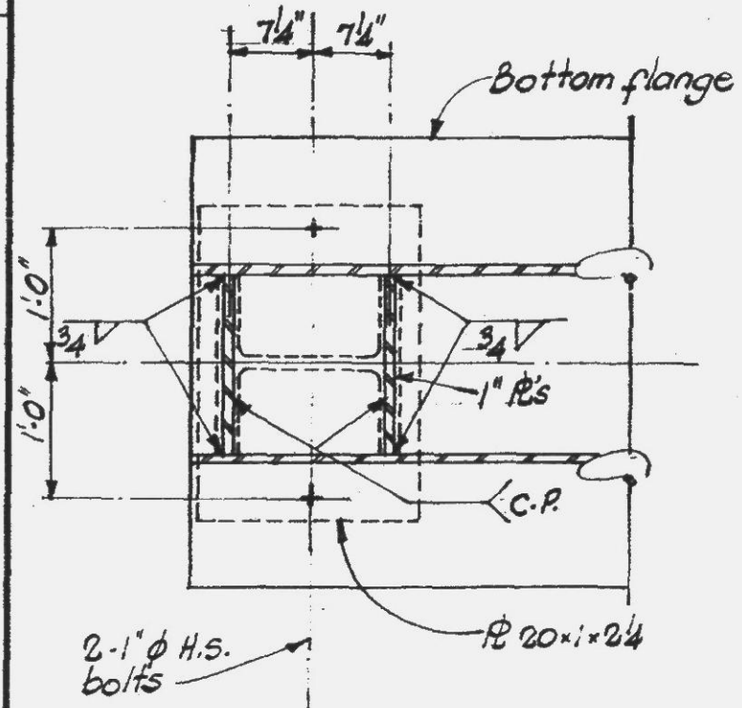

Detail 2

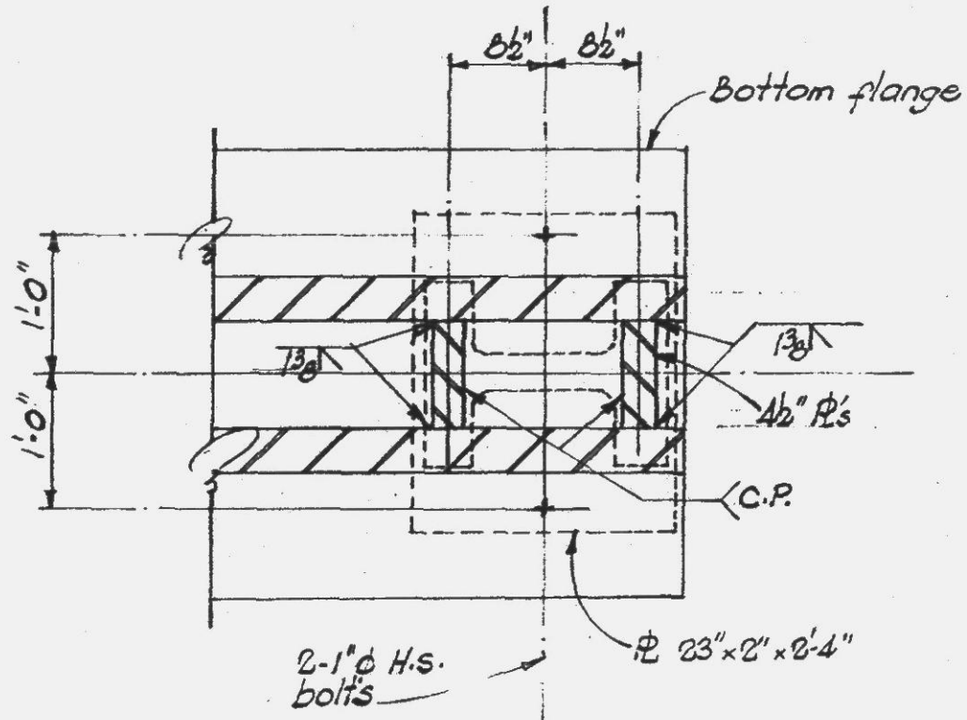

Detail 3

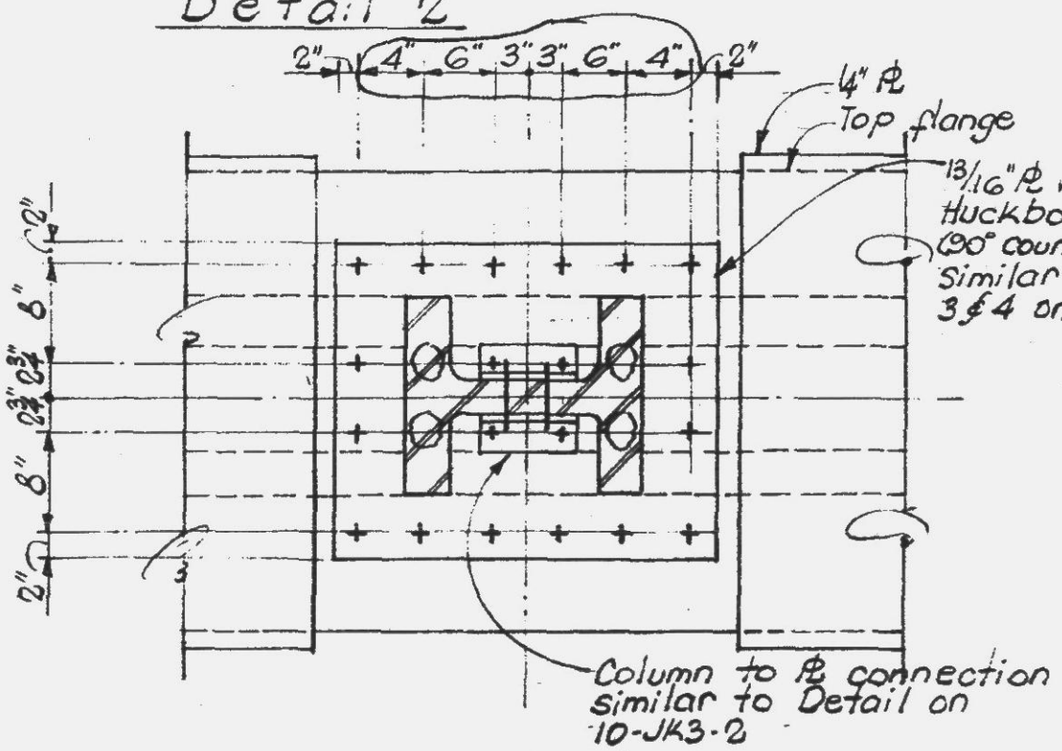

Detail 4

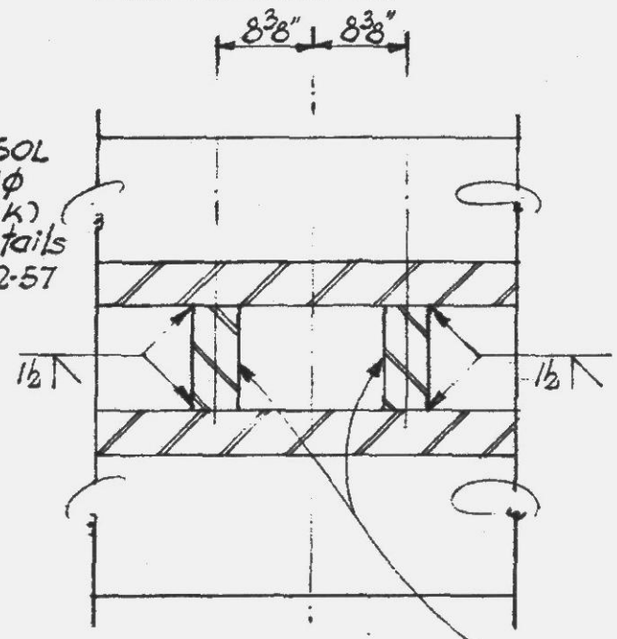

Detail 5

LICENSED PROFESSIONAL ENGINEER
LESLIE E. ROBERTSON
No. 34360
UNIVERSITY OF THE STATE OF NEW YORK

DESIGNED

DRAWN S.C.

REVIEWED E.L.

12-JK2-169

SKILLING, HELLE, CHRISTIANSEN, ROBERTSON — Structural & Civil Engineers

PROJECT: THE WORLD TRADE CENTER | TITLE: DETAILS OF PLATE GIRDER | DATE: 3-21-69

REVISIONS

5-29-69

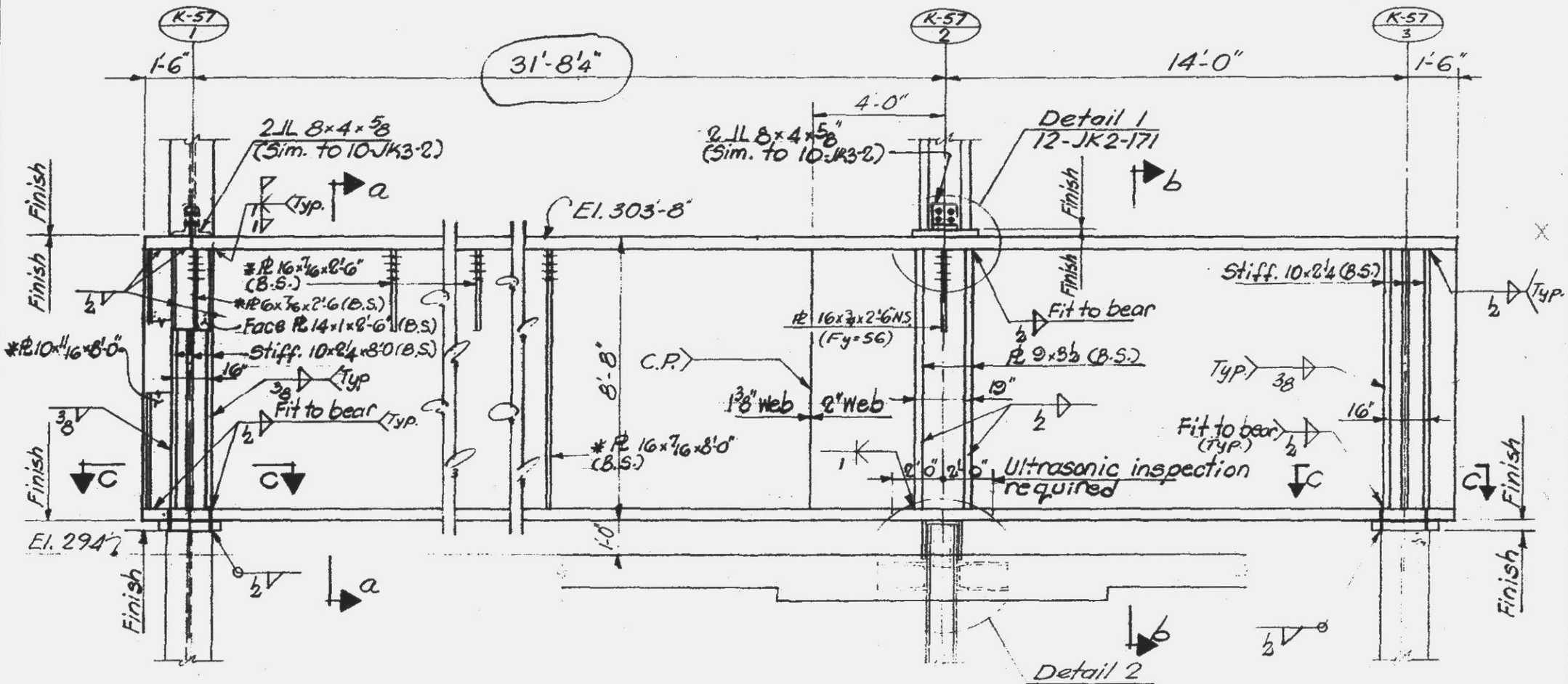

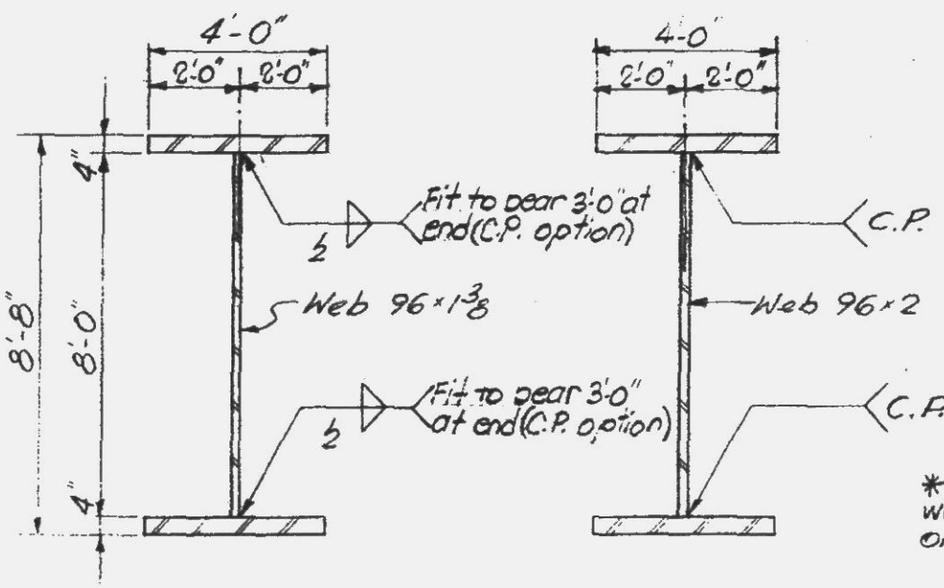

Section a-a — Section b-b

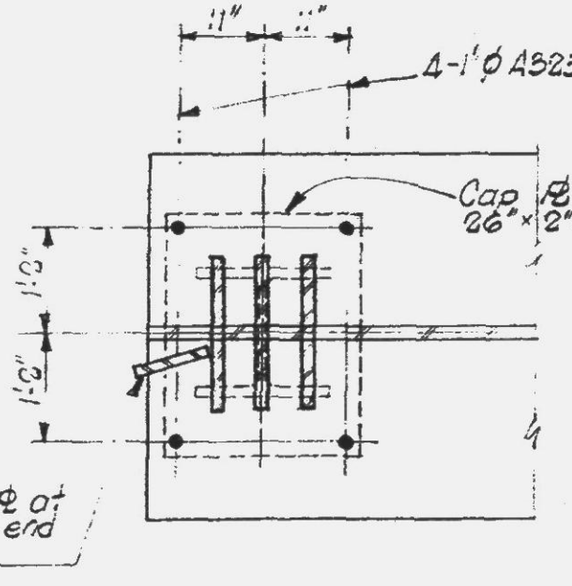

Section c-c

Notes:
1. * PL skewed to line up with supported beam. Detail similar to 12-JK2-111 & 112.
2. All material to have Fy=42 K.S.I except as noted.
3. All welds to be E70xx.

LICENSED PROFESSIONAL ENGINEER — LESLIE E. ROBERTSON — No. 34360 — UNIVERSITY OF THE STATE OF NEW YORK

DESIGNED: J. Hufnagel
DRAWN: J. Gricius
REVIEWED: E.L.

12-JK2-170

SKILLING, HELLE, CHRISTIANSEN, ROBERTSON — Structural & Civil Engineers

PROJECT: THE WORLD TRADE CENTER | TITLE: DETAILS OF PLATE GIRDER | DATE: 3-21-69

REVISIONS

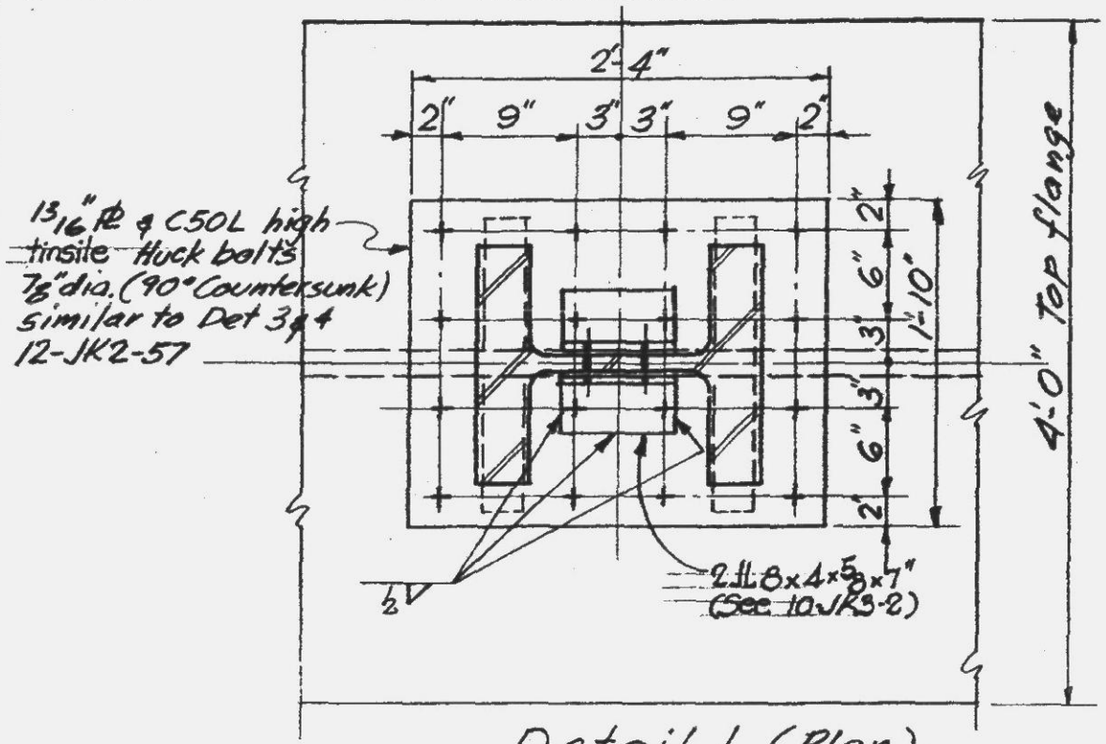

Detail 1 (Plan)

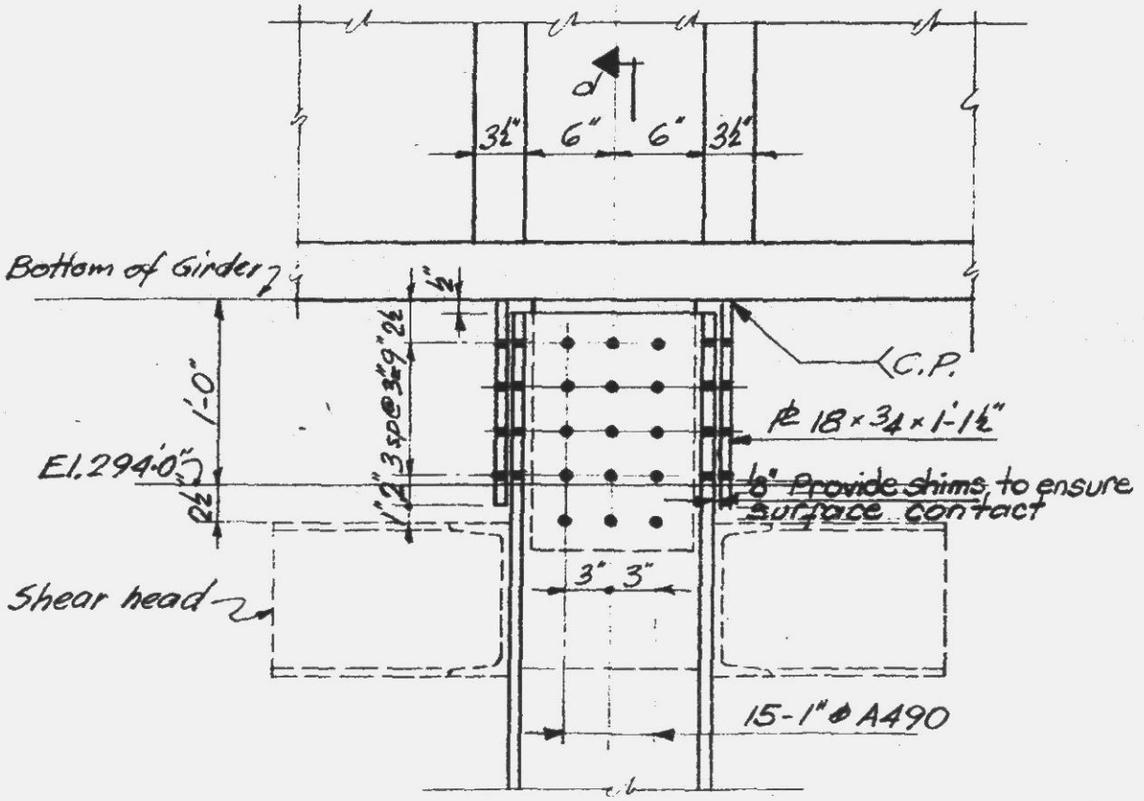

Detail 2 (Elevation)

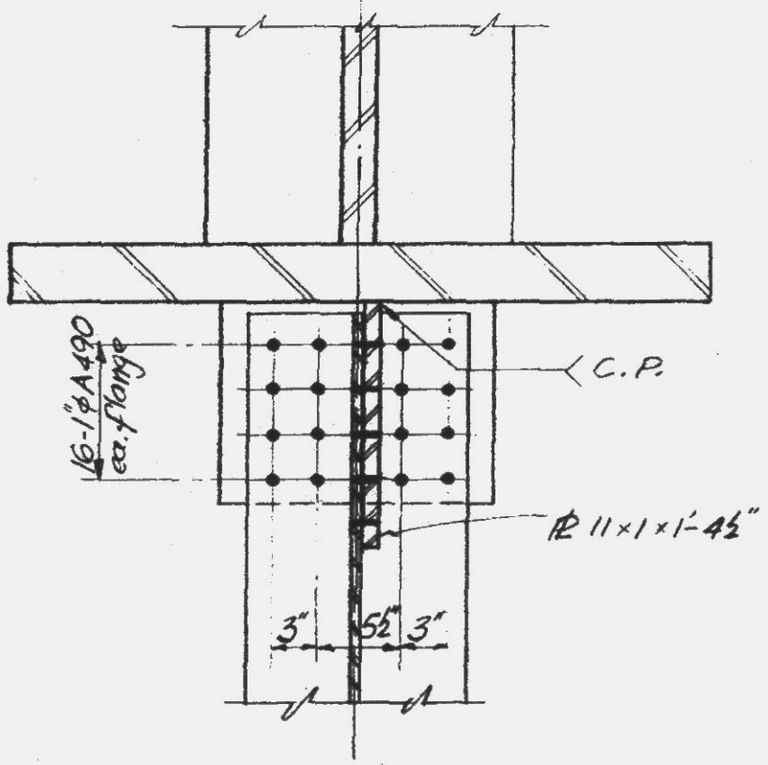

Section d-d

LICENSED PROFESSIONAL ENGINEER — LESLIE E. ROBERTSON — No. 34360 — UNIVERSITY OF THE STATE OF NEW YORK

DESIGNED: J. Hufnagel
DRAWN: J. Gricius
REVIEWED: E.L.

12-JK2-171

SKILLING, HELLE, CHRISTIANSEN, ROBERTSON — Structural & Civil Engineers

PROJECT THE WORLD TRADE CENTER | TITLE DETAILS OF PLATE GIRDER | DATE 3-12-69

REVISIONS
3-21-69

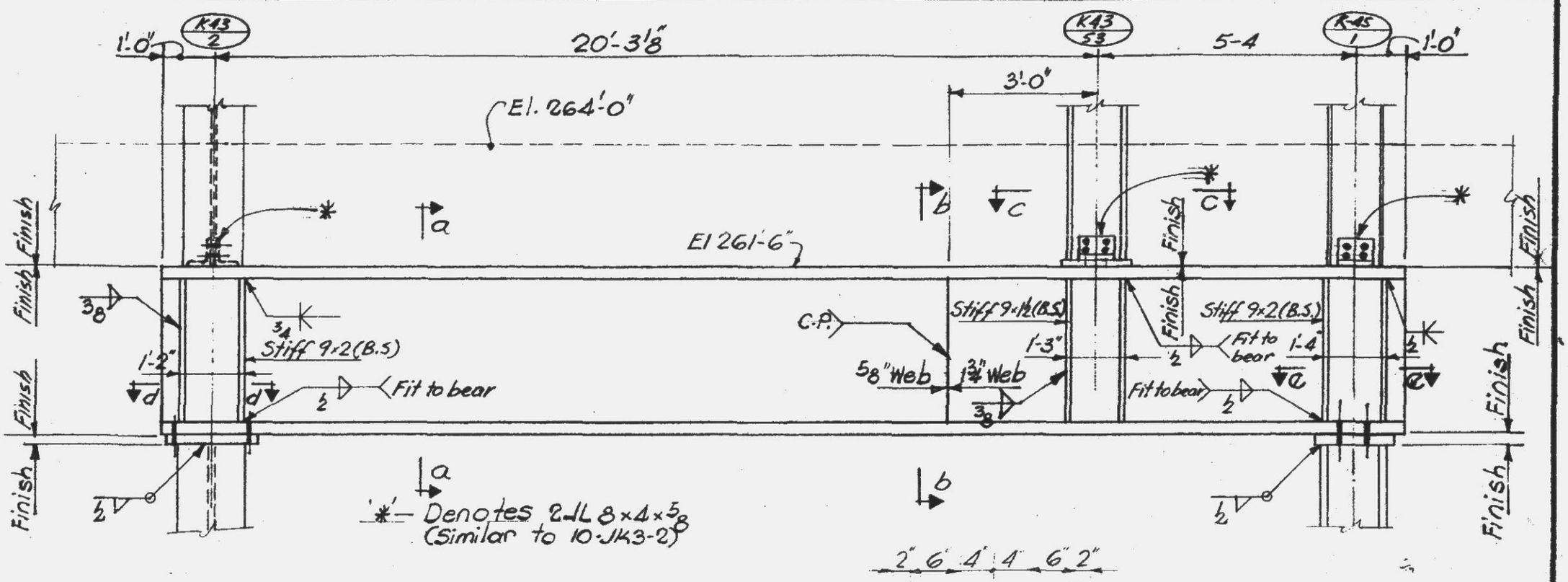

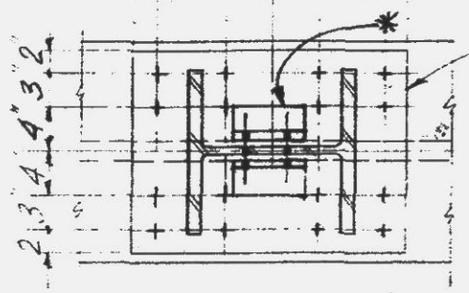

Notes:
1. All welds to be E70xx.
2. All material A-36 steel

Section c-c

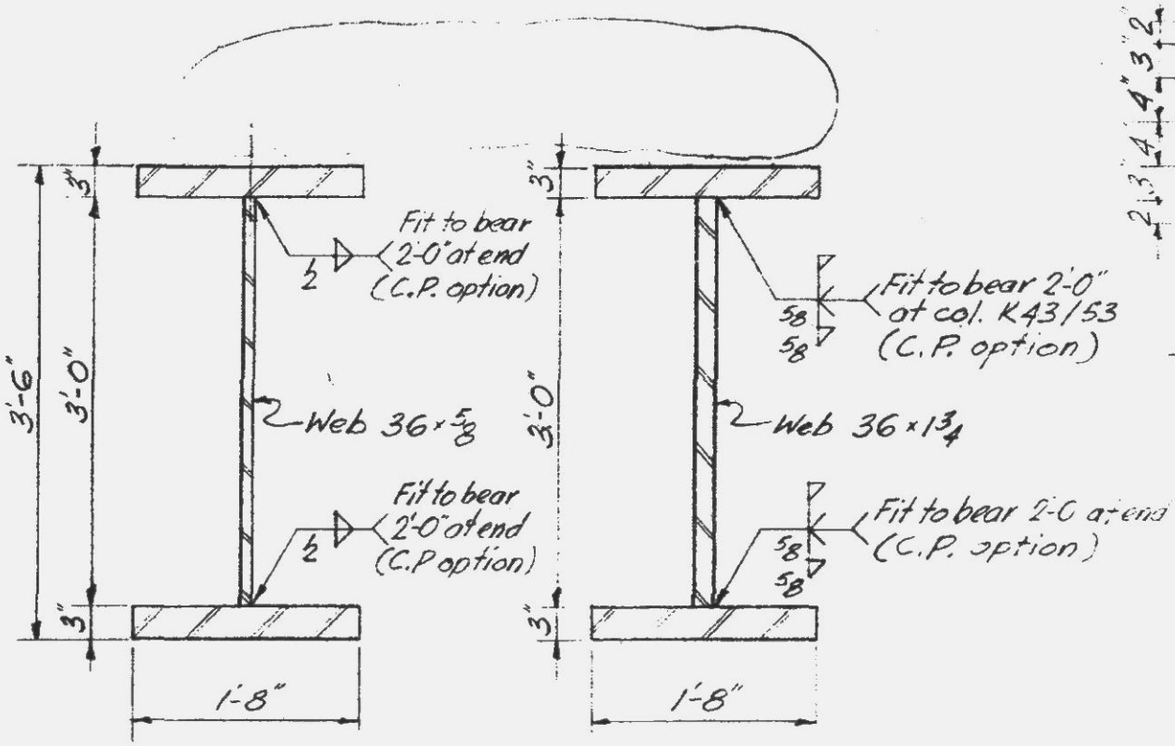

Section a-a | Section b-b

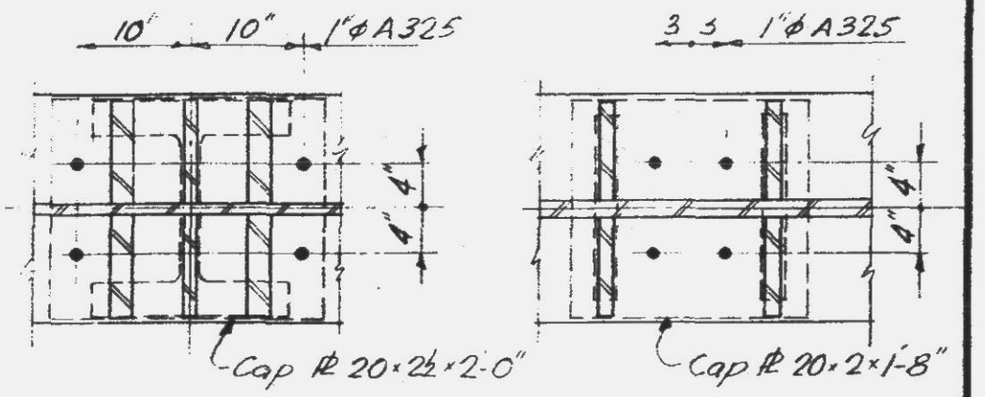

Section d-d | Section e-e

LICENSED PROFESSIONAL ENGINEER
LESLIE E. ROBERTSON
No. 34960
UNIVERSITY OF THE STATE OF NEW YORK

DESIGNED Hufnagel
DRAWN J. Gricius
REVIEWED E.L.

12-JK2-172

SKILLING, HELLE, CHRISTIANSEN, ROBERTSON — Structural & Civil Engineers

PROJECT THE WORLD TRADE CENTER | TITLE DETAIL OF PLATE GIRDER | DATE 3-12-69

REVISIONS

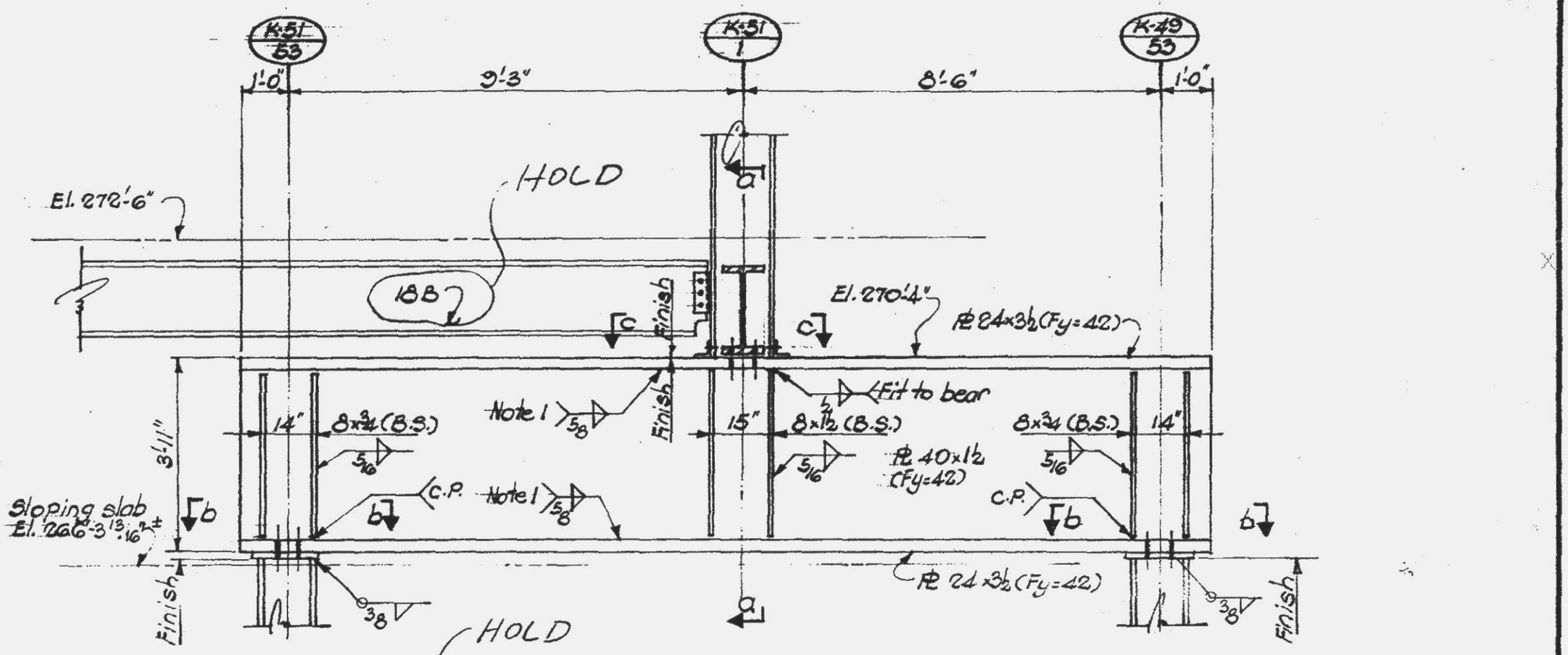

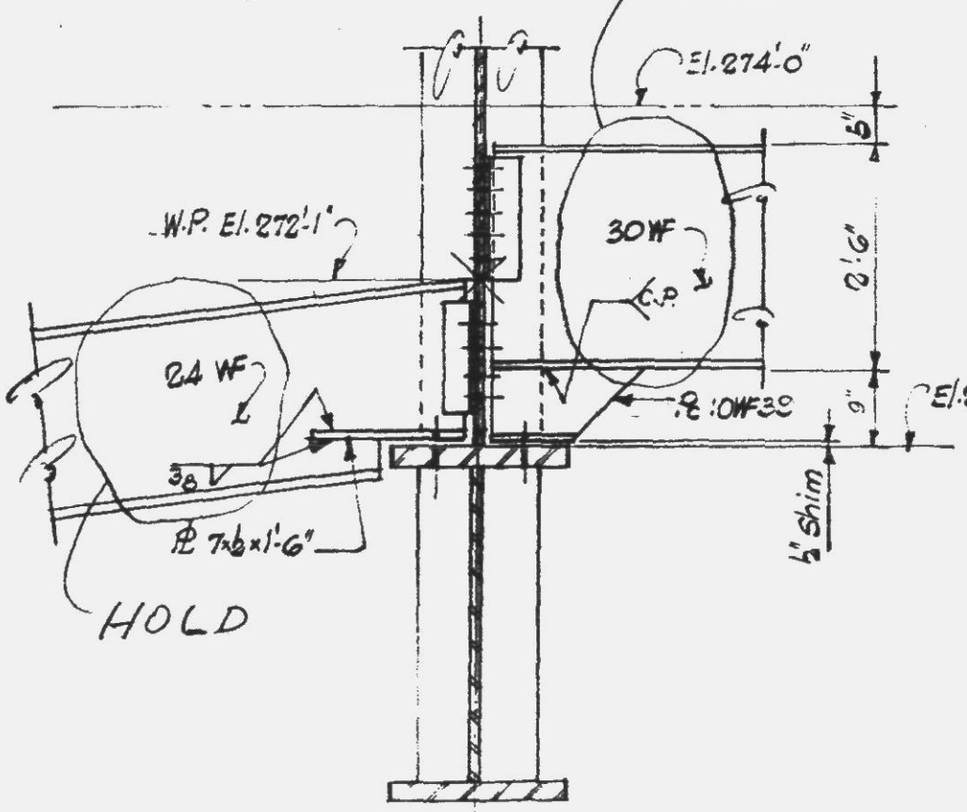

Section a-a

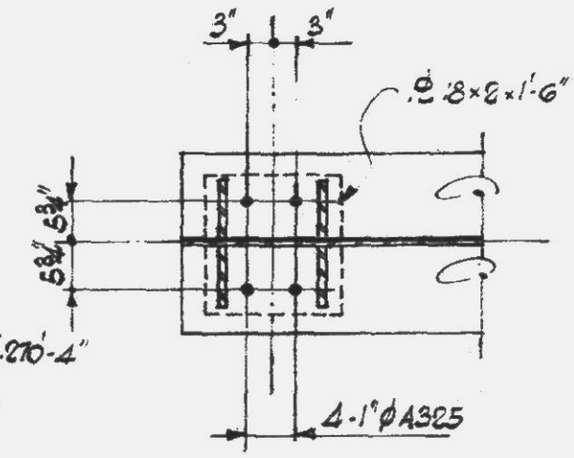

Section b-b

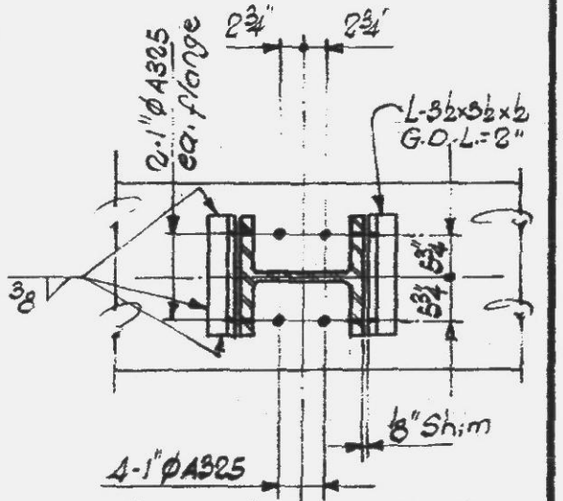

Section C-C

NOTES:

1. Fit web to bear for distance of 2'-0" at columns (loaded flange only), or C.P. weld for same distance at Contractors option.
2. All welds to be E70xx.
3. All PLs to be A-36 steel, except as noted.

12-JK2-173

LICENSED PROFESSIONAL ENGINEER — LESLIE E. ROBERTSON — No. 34360 — UNIVERSITY OF THE STATE OF NEW YORK

DESIGNED —rufnage!
DRAWN S.T.M.
REVIEWED E.L.

SKILLING, HELLE, CHRISTIANSEN, ROBERTSON — Structural & Civil Engineers

PROJECT THE WORLD TRADE CENTER | TITLE DETAIL OF PLATE GIRDER | DATE 3-12-69

REVISIONS

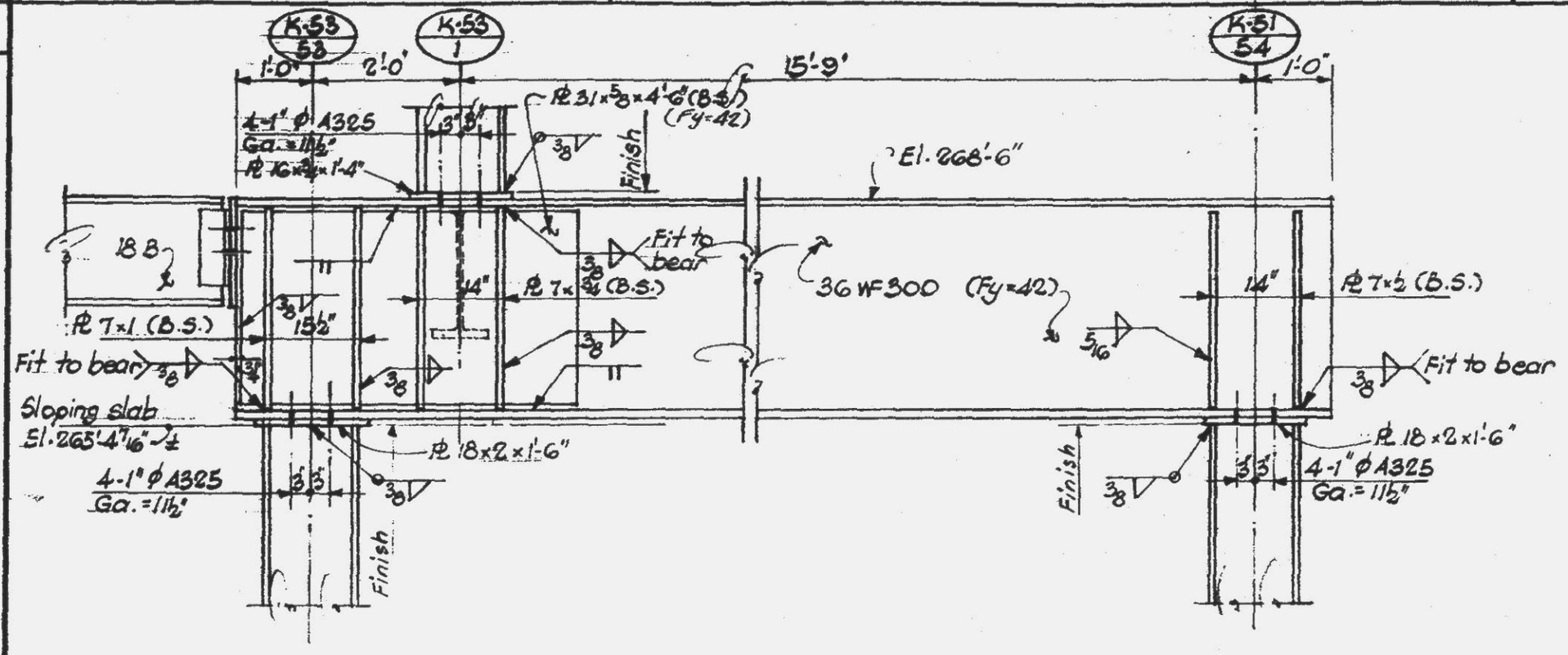

Notes:
1. All welds to be E70xx.
2. All PLs to be A-36 steel except as noted.

LICENSED PROFESSIONAL ENGINEER — LESLIE E. ROBERTSON — No. 24360 — NEW YORK

DESIGNED J. Hufnagel
DRAWN G.T.M.
REVIEWED E.L.

12-JK2-174

SKILLING, HELLE, CHRISTIANSEN, ROBERTSON — Structural & Civil Engineers

PROJECT: THE WORLD TRADE CENTER | TITLE: DETAIL OF PLATE GIRDER | DATE: 3-21-69

REVISIONS

4-18-69

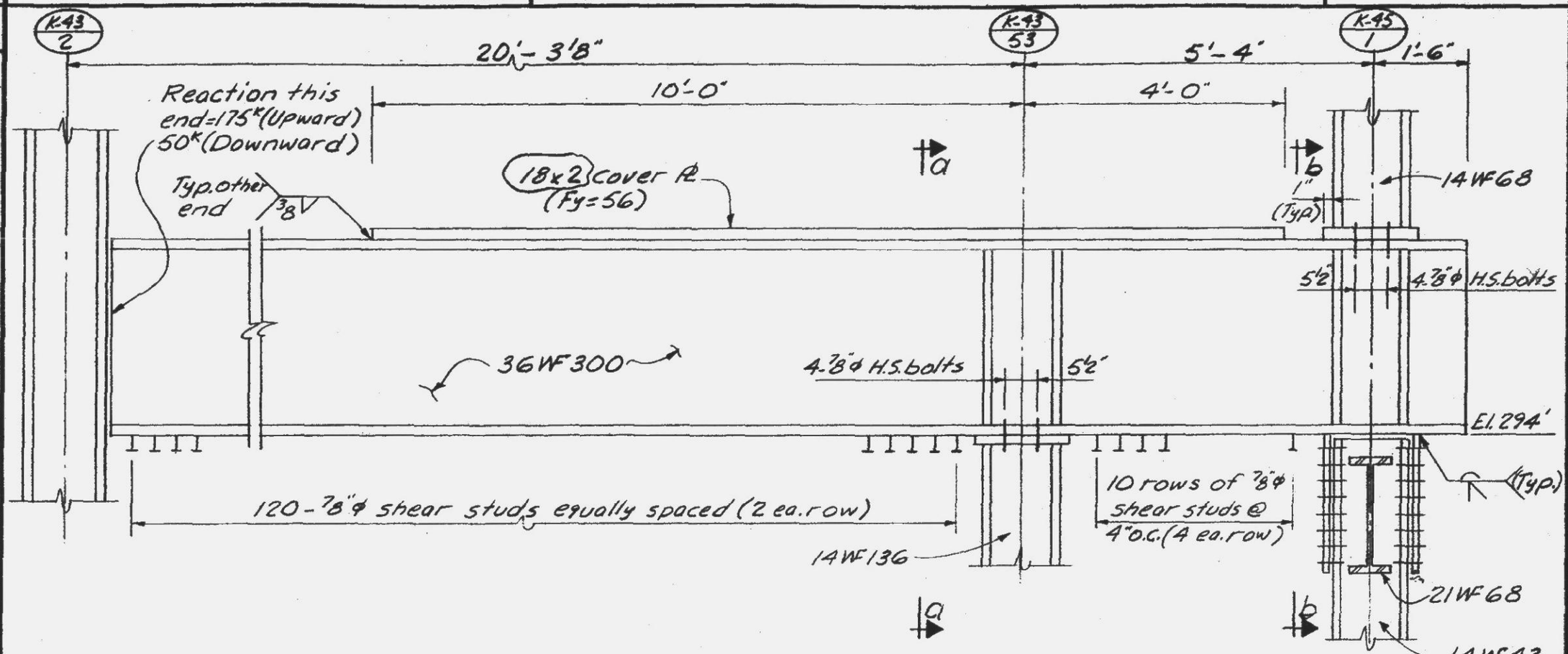

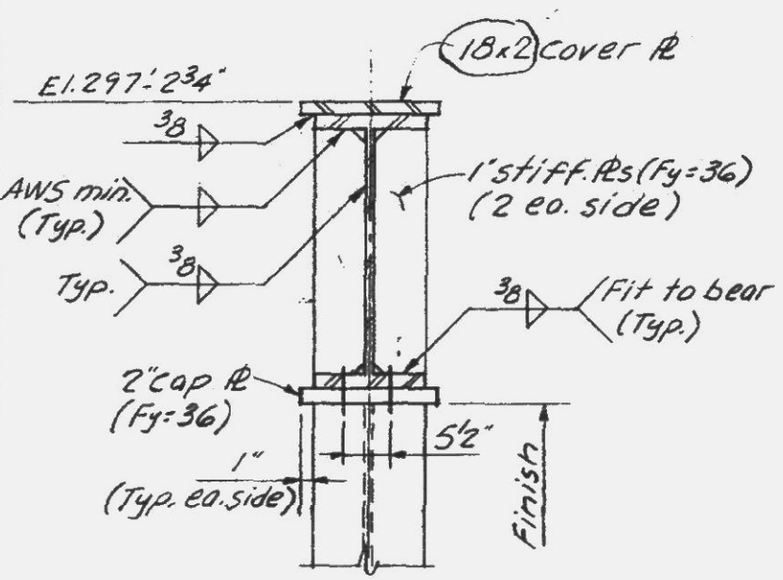

Section a-a

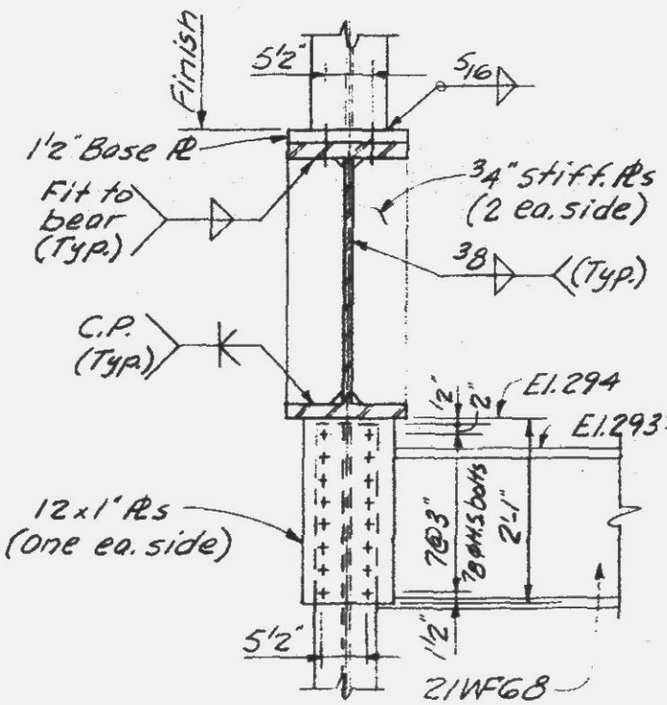

Section b-b

Notes:

1. All welds to be E70xx.
2. All bolts to be A-325 friction type H.S. bolts.
3. Column cap PL detail similar to detail 104 (10-JK2-7)

LICENSED PROFESSIONAL ENGINEER — LESLIE E. ROBERTSON — No. 34360 — UNIVERSITY OF THE STATE OF NEW YORK

DESIGNED

DRAWN: A.L. FRANQUI

REVIEWED: E.L.

12-JK2-175

SKILLING, HELLE, CHRISTIANSEN, ROBERTSON — Structural & Civil Engineers

PROJECT: THE WORLD TRADE CENTER | TITLE: DETAILS OF PLATE GIRDER | DATE: 9-17-69

REVISIONS

4-8-70

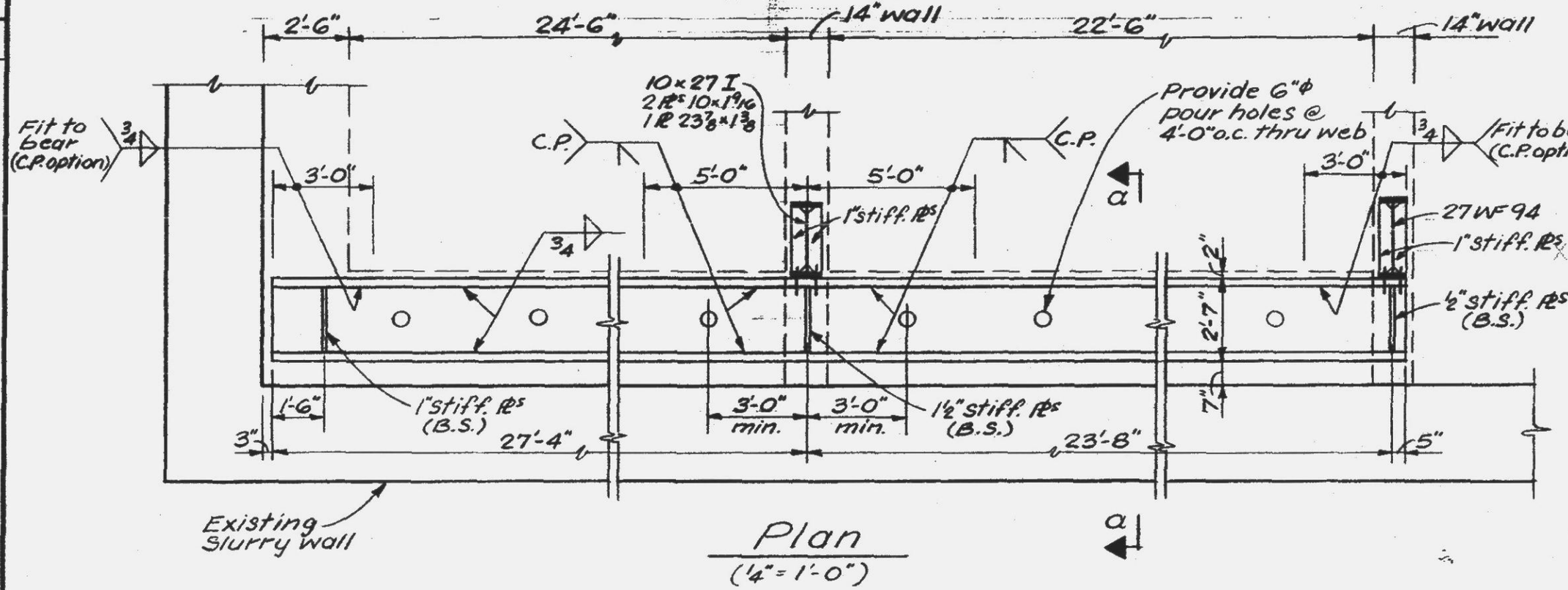

Plan

(1/4" = 1'-0")

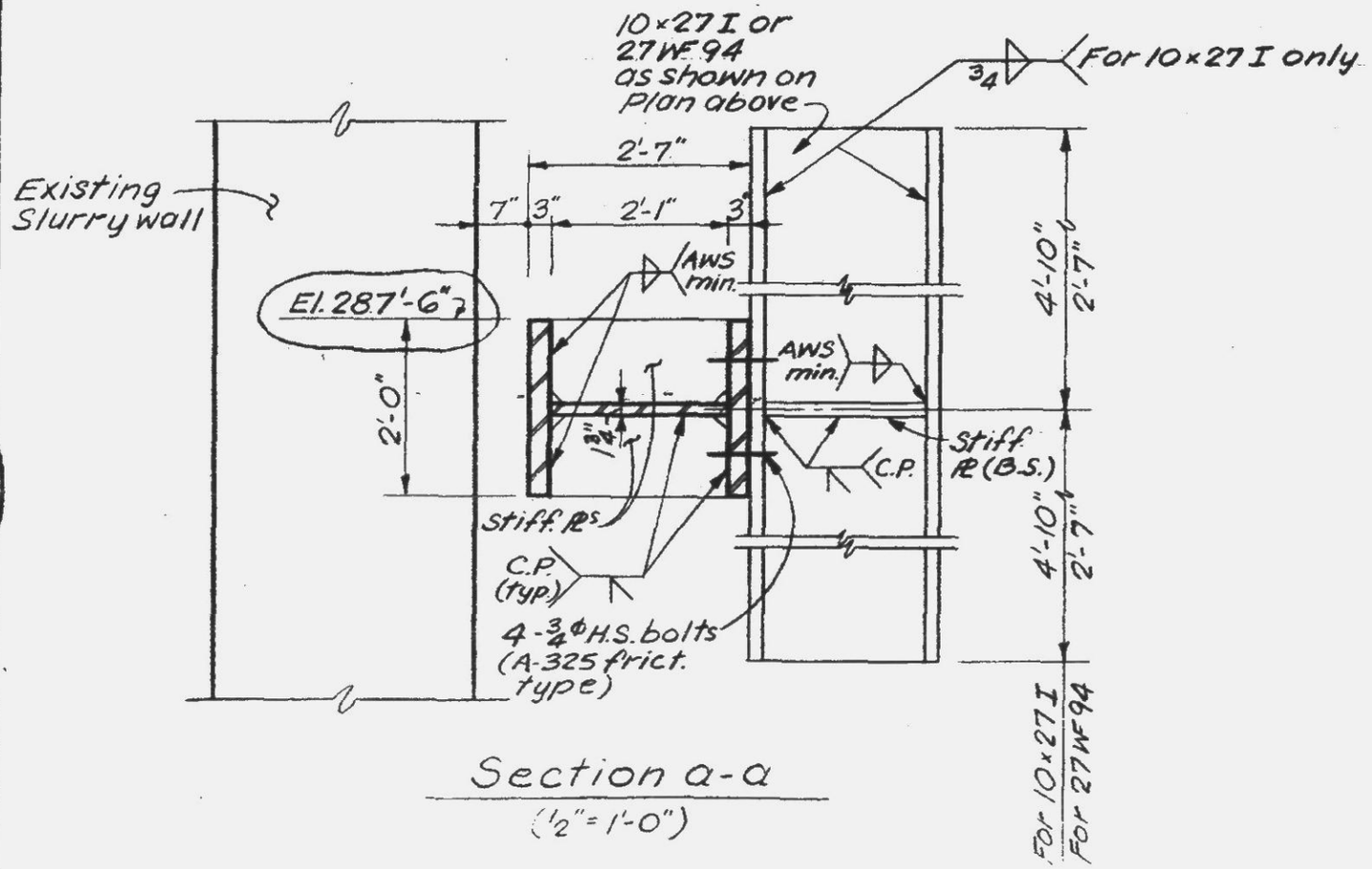

Section a-a

(1/2" = 1'-0")

Notes:

1. All material shown to have Fy = 42 ksi.
2. All welds to be E70xx

LICENSED PROFESSIONAL ENGINEER — LESLIE E. ROBERTSON — No. 34360 — UNIVERSITY OF THE STATE OF NEW YORK

DESIGNED

DRAWN S.C.

REVIEWED E.L.

12-JK2-176

SKILLING, HELLE, CHRISTIANSEN, ROBERTSON — Structural & Civil Engineers

PROJECT: THE WORLD TRADE CENTER | TITLE: GIRDERS EL 310 | DATE: 9/15/71

REVISIONS

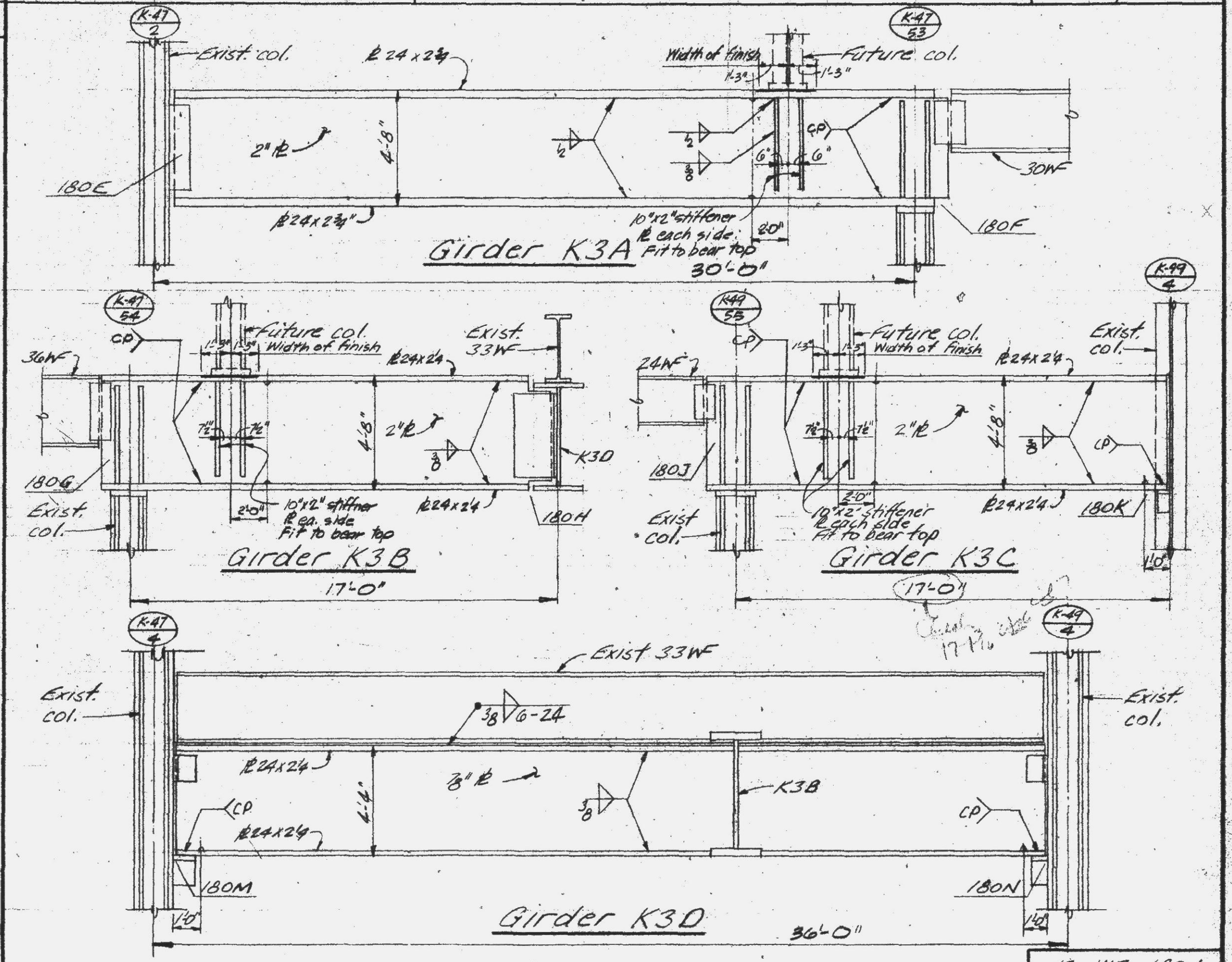

LICENSED PROFESSIONAL ENGINEER
LESLIE E. ROBERTSON
No. 34360
UNIVERSITY OF THE STATE OF NEW YORK

DESIGNED
DRAWN
REVIEWED

12-JKZ-180.1

SKILLING, HELLE, CHRISTIANSEN, ROBERTSON — Structural & Civil Engineers

PROJECT: THE WORLD TRADE CENTER | TITLE: GIRDERS EL 310 | DATE: 9/15/71

REVISIONS

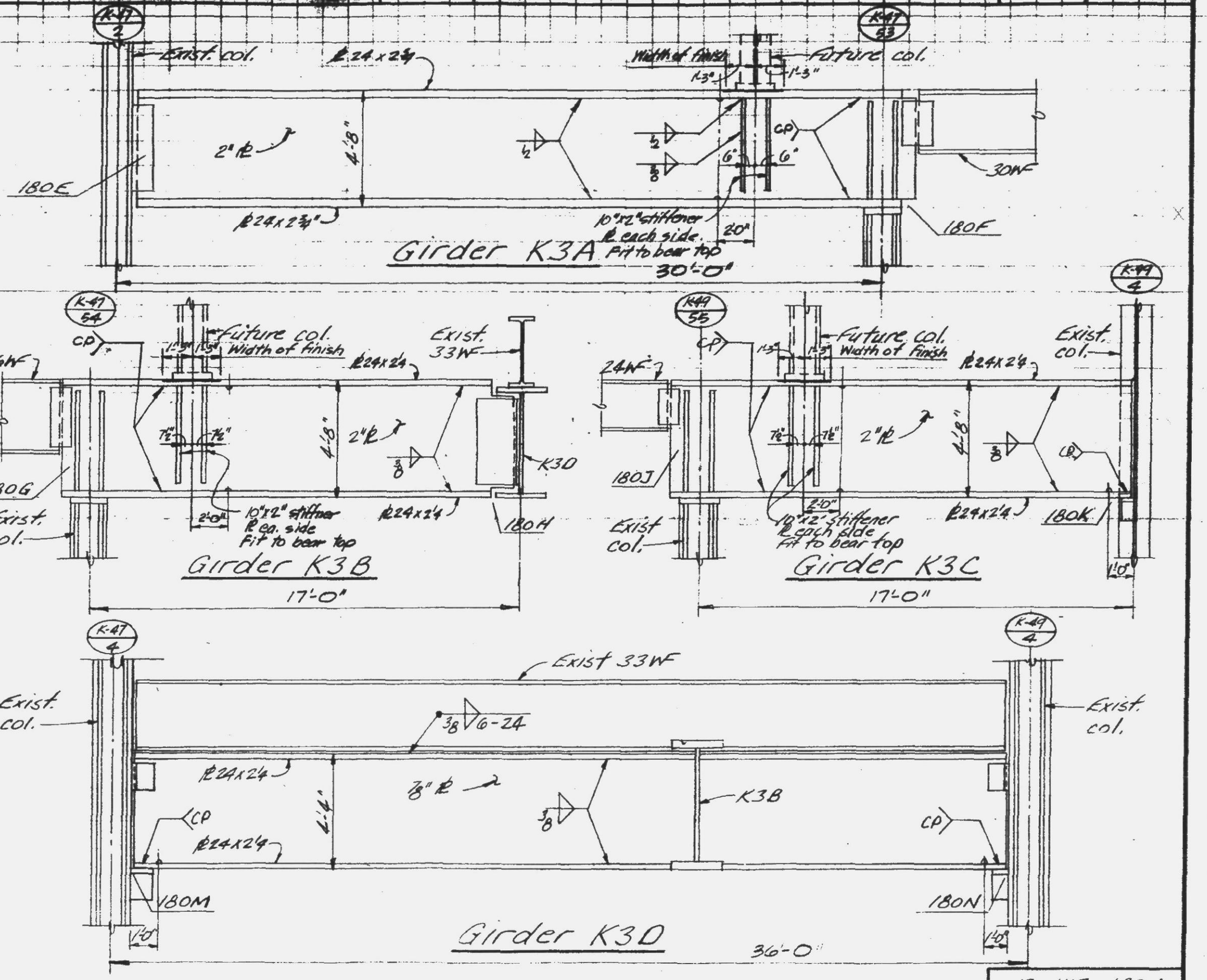

LICENSED PROFESSIONAL ENGINEER
LESLIE E. ROBERTSON
No. 34360
UNIVERSITY OF THE STATE OF NEW YORK

DESIGNED: J. Roer
DRAWN: [signature]
REVIEWED

12-JKZ-180.1

SKILLING, HELLE, CHRISTIANSEN, ROBERTSON — Structural & Civil Engineers

PROJECT: THE WORLD TRADE CENTER — TITLE: GIRDER DETAILS ELEVATION 310 — DATE: 9-15-71

REVISIONS

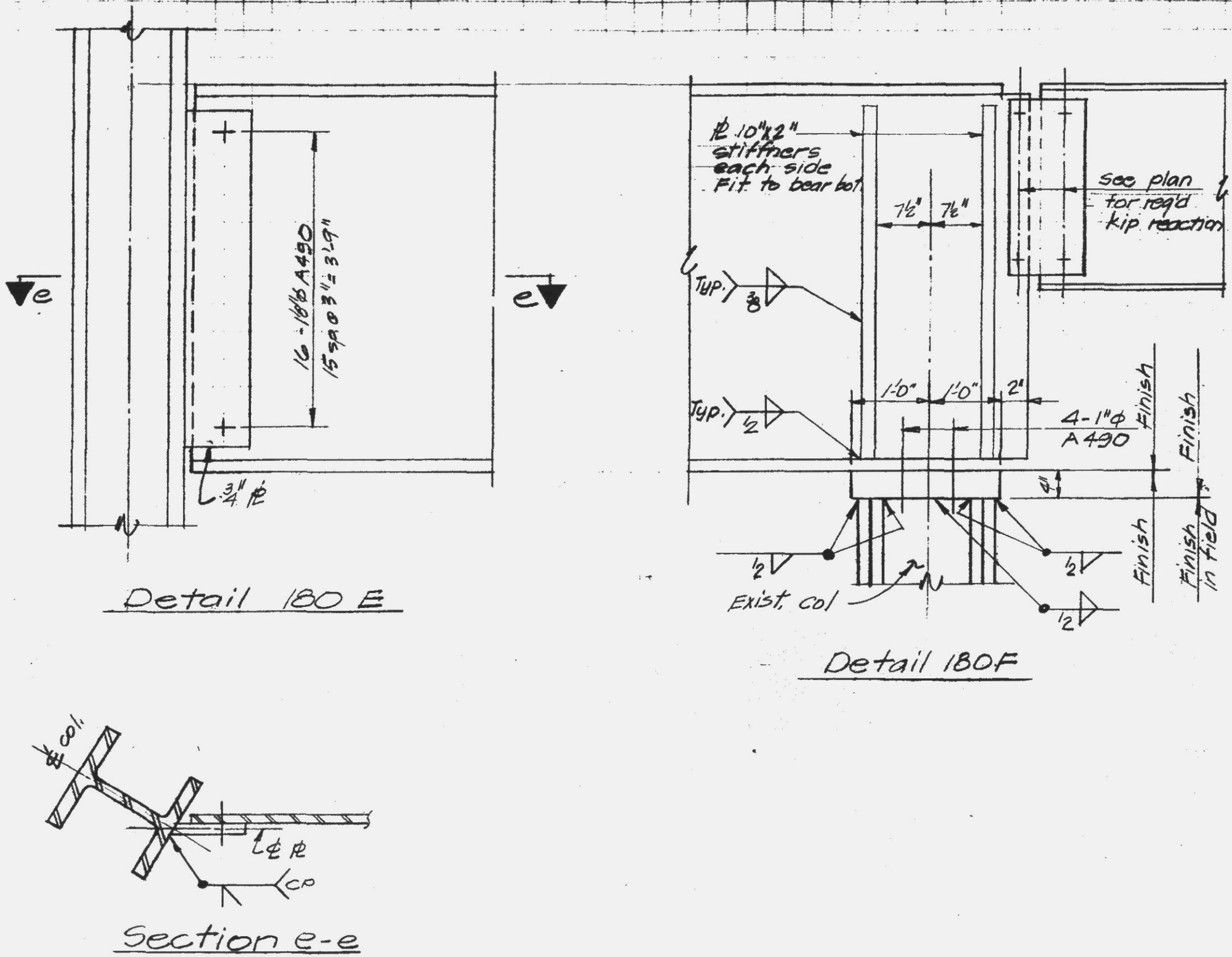

Detail 180 E

Detail 180F

Section e-e

LICENSED PROFESSIONAL ENGINEER
LESLIE E. ROBERTSON
No. 34360
UNIVERSITY OF THE STATE OF NEW YORK

DESIGNED: H. Roe

DRAWN: [illegible]

REVIEWED

12-JK2-180.2

REVISIONS

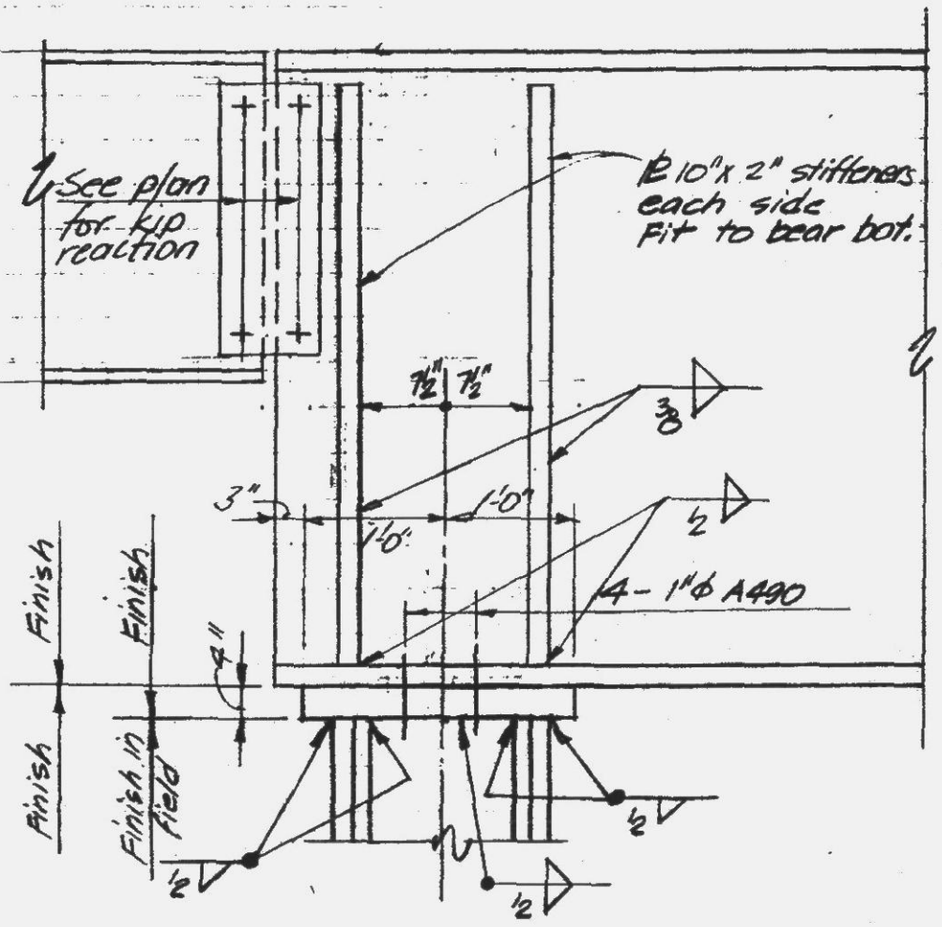

Detail 180 G
Detail 180 J

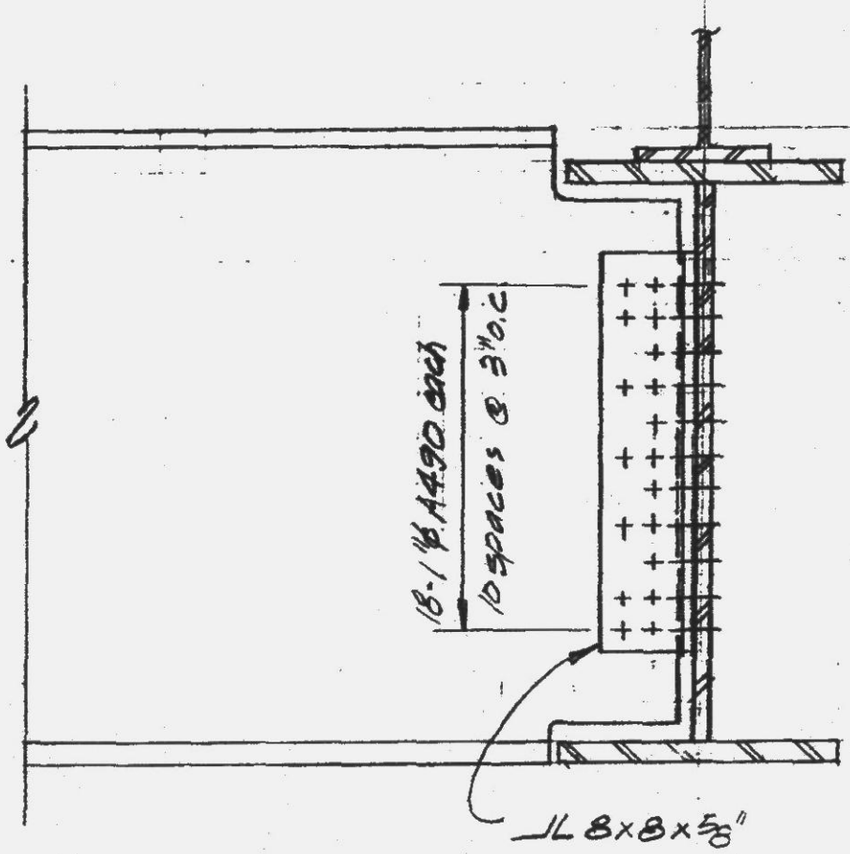

Detail 180 H

LICENSED PROFESSIONAL ENGINEER
LESLIE E. ROBERTSON
No. 34980
UNIVERSITY OF THE STATE OF NEW YORK

DESIGNED H. Roer
DRAWN pMorelli
REVIEWED

12-JK2-1803

REVISIONS

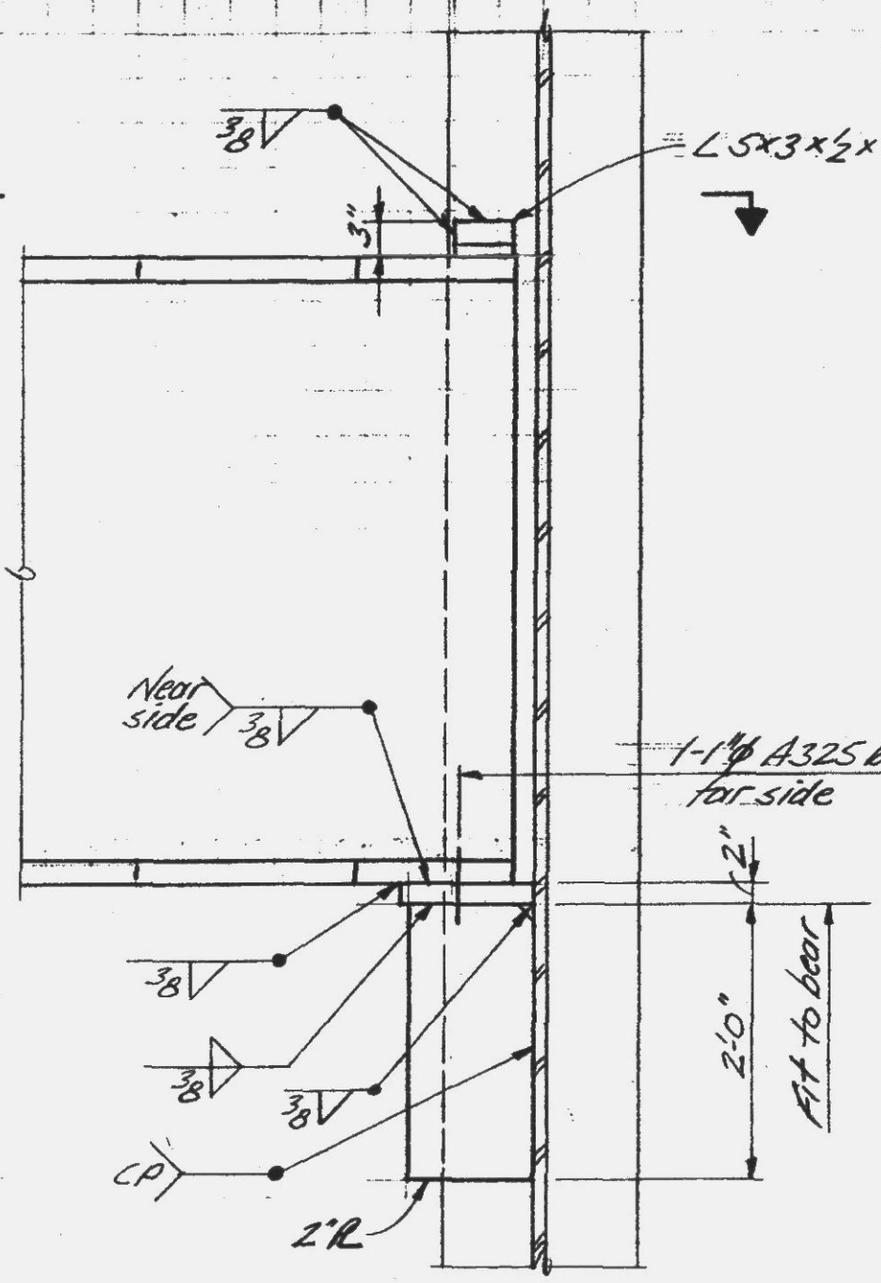

180K

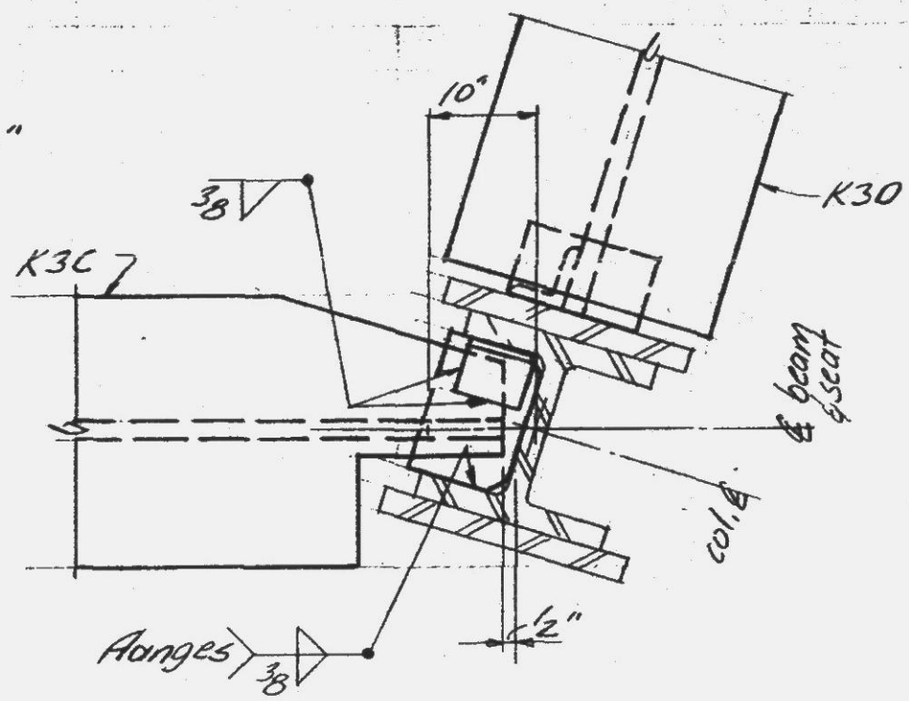

180 K & N

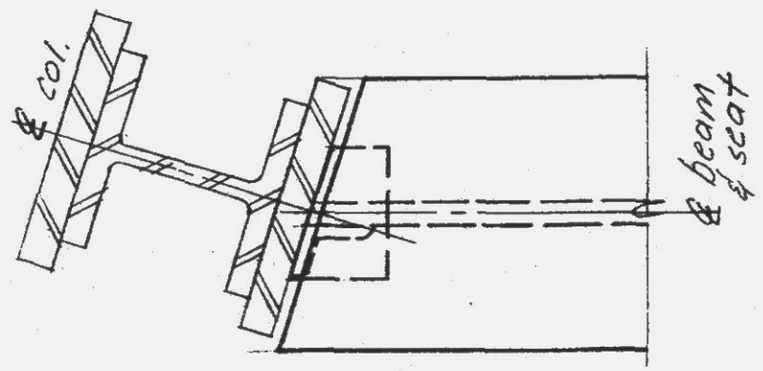

180M

LICENSED PROFESSIONAL ENGINEER
LESLIE E. ROBERTSON
No 34360
UNIVERSITY OF THE STATE OF NEW YORK

DESIGNED J. Rost
DRAWN J. Adams
REVIEWED

12-JK2-180.4

SKILLING, HELLE, CHRISTIANSEN, ROBERTSON — Structural & Civil Engineers

PROJECT: THE WORLD TRADE CENTER | TITLE: GIRDER DETAILS - EL 310 | DATE: 9-15-71

REVISIONS

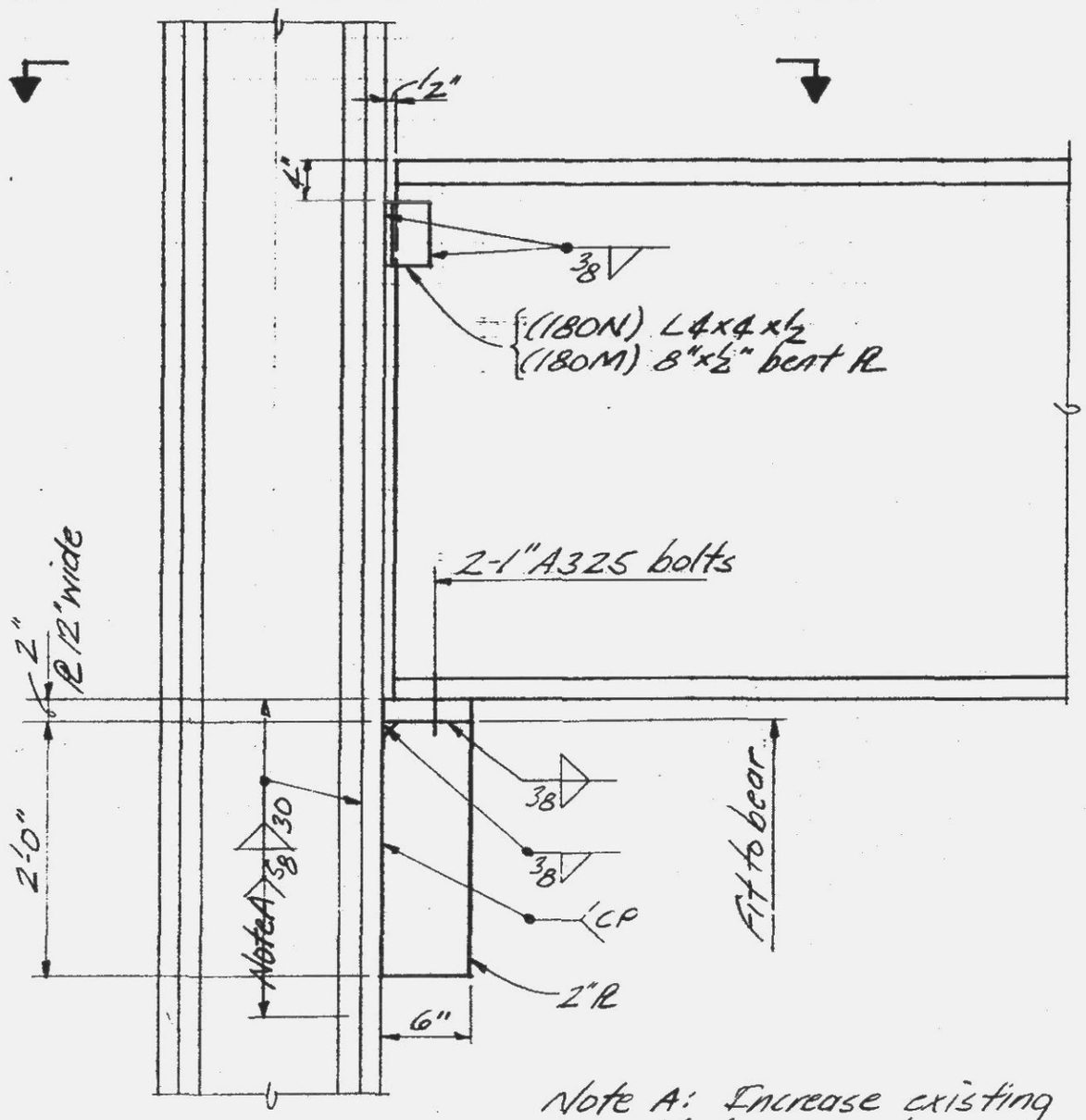

Note A: Increase existing weld to size shown.

180M
180N

LICENSED PROFESSIONAL ENGINEER
LESLIE E. ROBERTSON
No. 34360
UNIVERSITY OF THE STATE OF NEW YORK

DESIGNED
DRAWN
REVIEWED

12-JK2-180.5

SKILLING HELLE CHRISTIANSEN ROBERTSON Structural & Civil Engineers

PROJECT THE WORLD TRADE CENTER | TITLE NEW GIRDERS K3E & K3F EL. 294 | DATE 1-15-72

REVISIONS

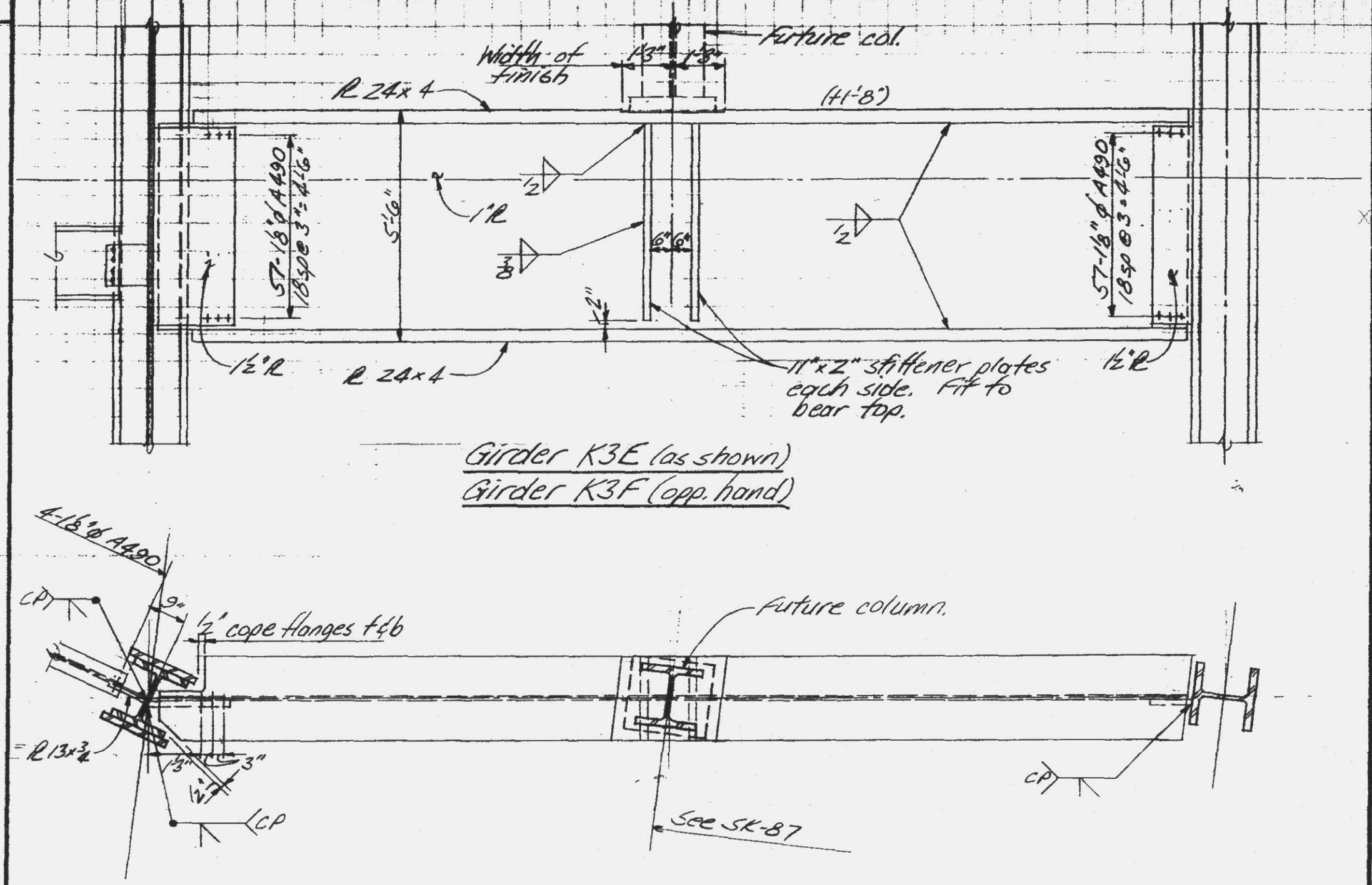

Girder K3E (as shown)
Girder K3F (opp. hand)

Plan

LICENSED PROFESSIONAL ENGINEER
LESLIE E. ROBERTSON
No. 34360
UNIVERSITY OF THE STATE OF NEW YORK

DESIGNED

DRAWN

REVIEWED
W Brewer

12-JK2-180.6

SKILLING, HELLE, CHRISTIANSEN, ROBERTSON — Structural & Civil Engineers

PROJECT: THE WORLD TRADE CENTER | TITLE: SILOCK DETAILS - EL. 332 | DATE: 7-15-72

REVISIONS

2/25/72

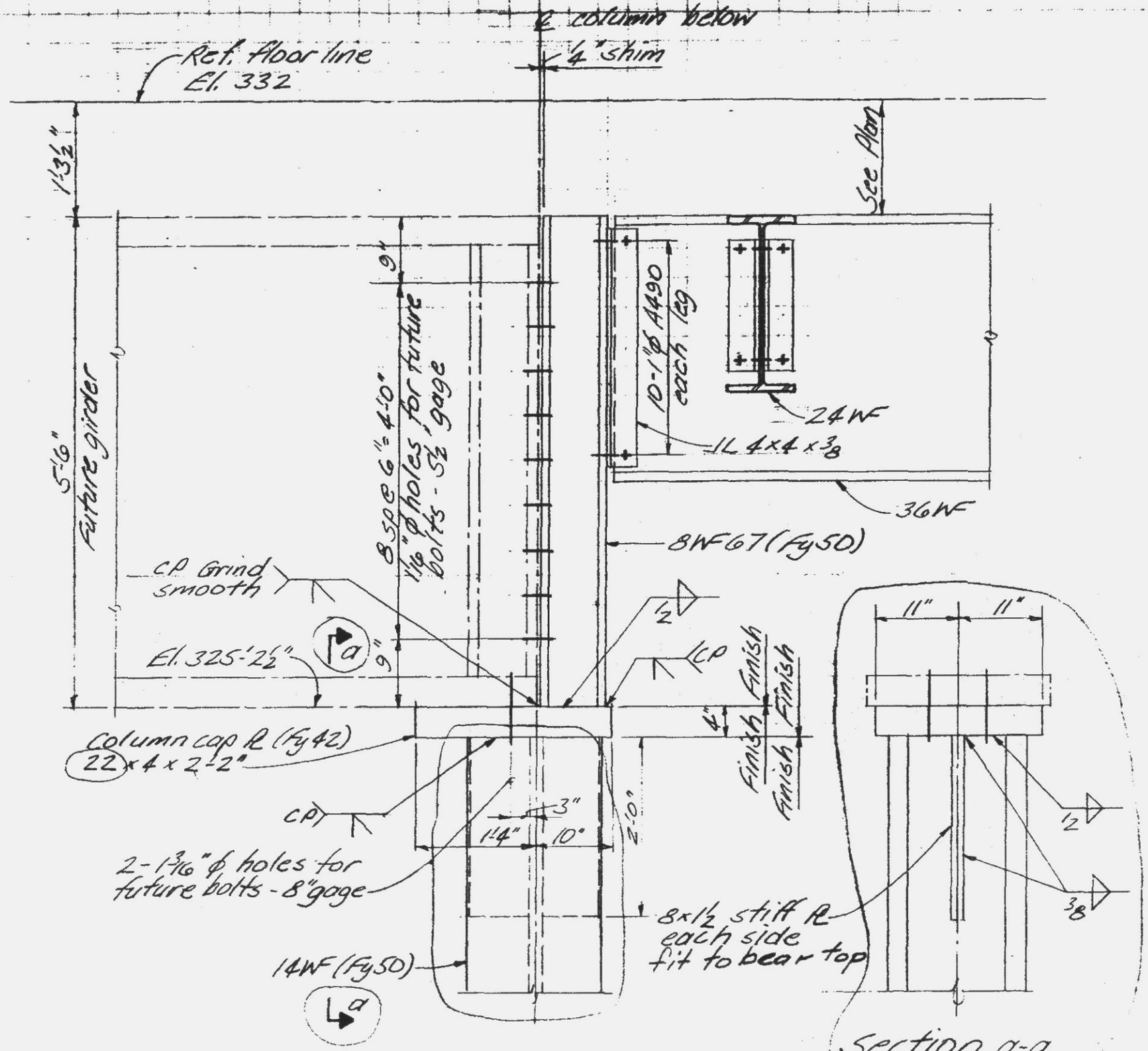

LICENSED PROFESSIONAL ENGINEER
LESLIE E. ROBERTSON
No. 34360
UNIVERSITY OF THE STATE OF NEW YORK

DESIGNED

DRAWN
J Adams

REVIEWED
W Brewer

12-JK2-181

SKILLING, HELLE, CHRISTIANSEN, ROBERTSON — Structural & Civil Engineers

PROJECT: THE WORLD TRADE CENTER | TITLE: DETAILS - EL 332 | DATE: 4-7-72

REVISIONS

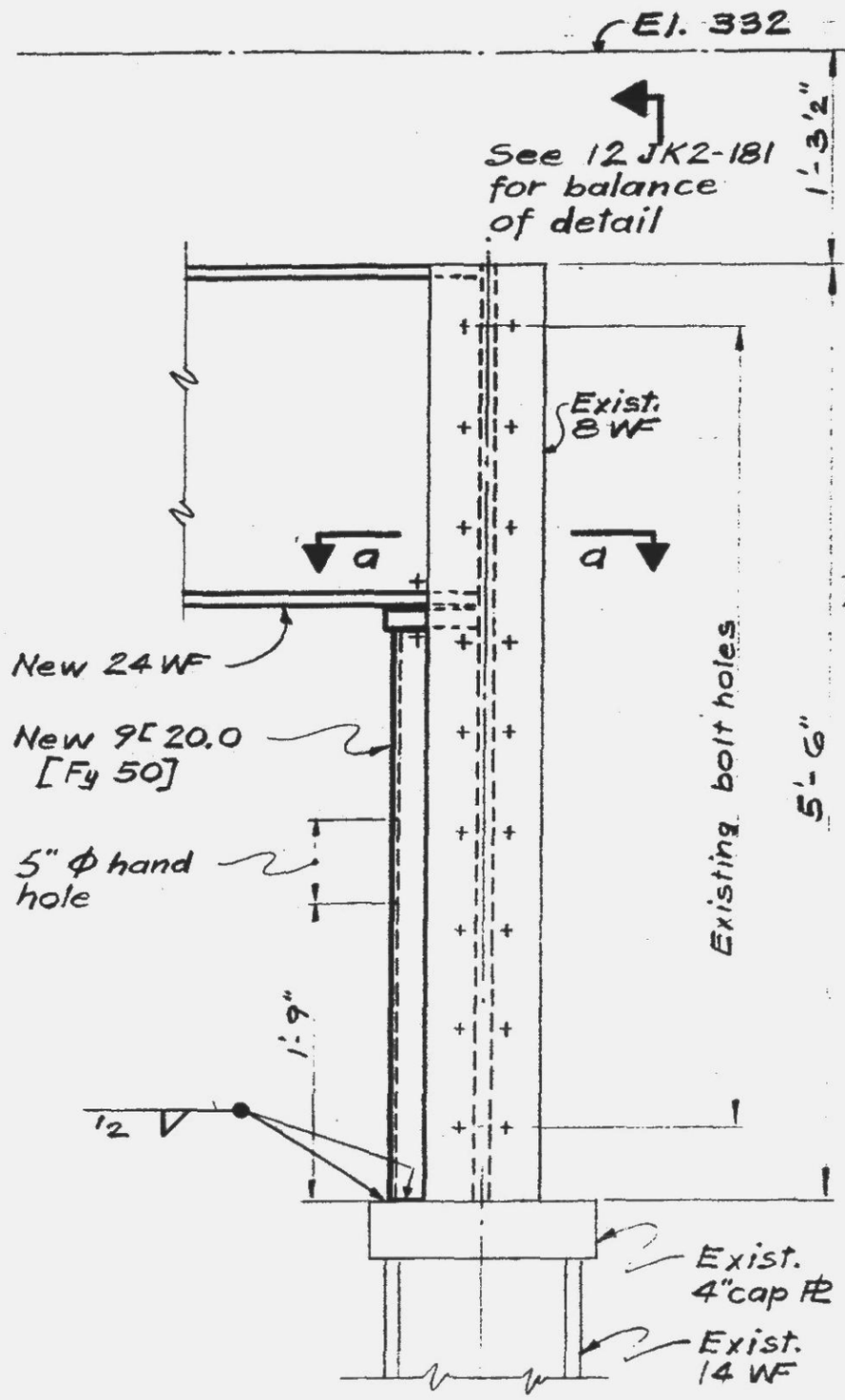

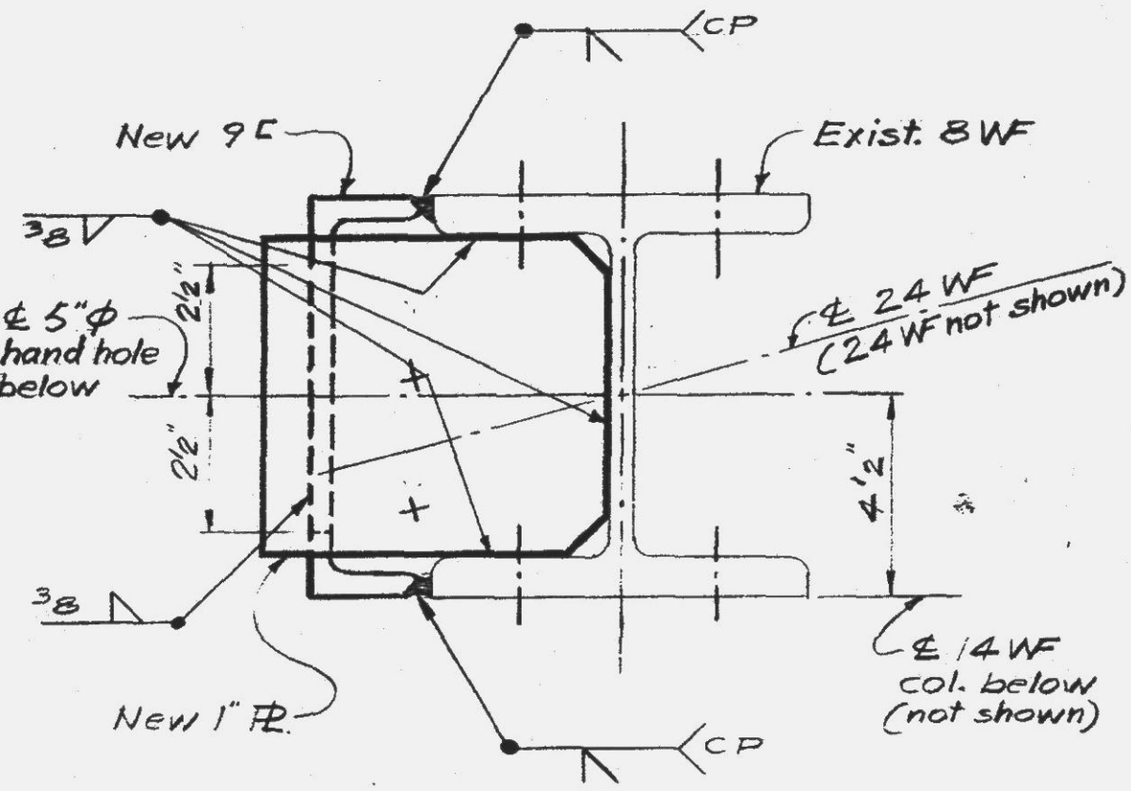

Section a-a

LICENSED PROFESSIONAL ENGINEER — LESLIE E. ROBERTSON — No. 34360 — UNIVERSITY OF THE STATE OF NEW YORK

DESIGNED

DRAWN H.A.W.

REVIEWED

12-JK2-182

SKILLING, HELLE, CHRISTIANSEN, ROBERTSON — Structural & Civil Engineers

PROJECT: THE WORLD TRADE CENTER

TITLE: BEAM CONNECTION DETAIL

DATE: 4-7-72

REVISIONS

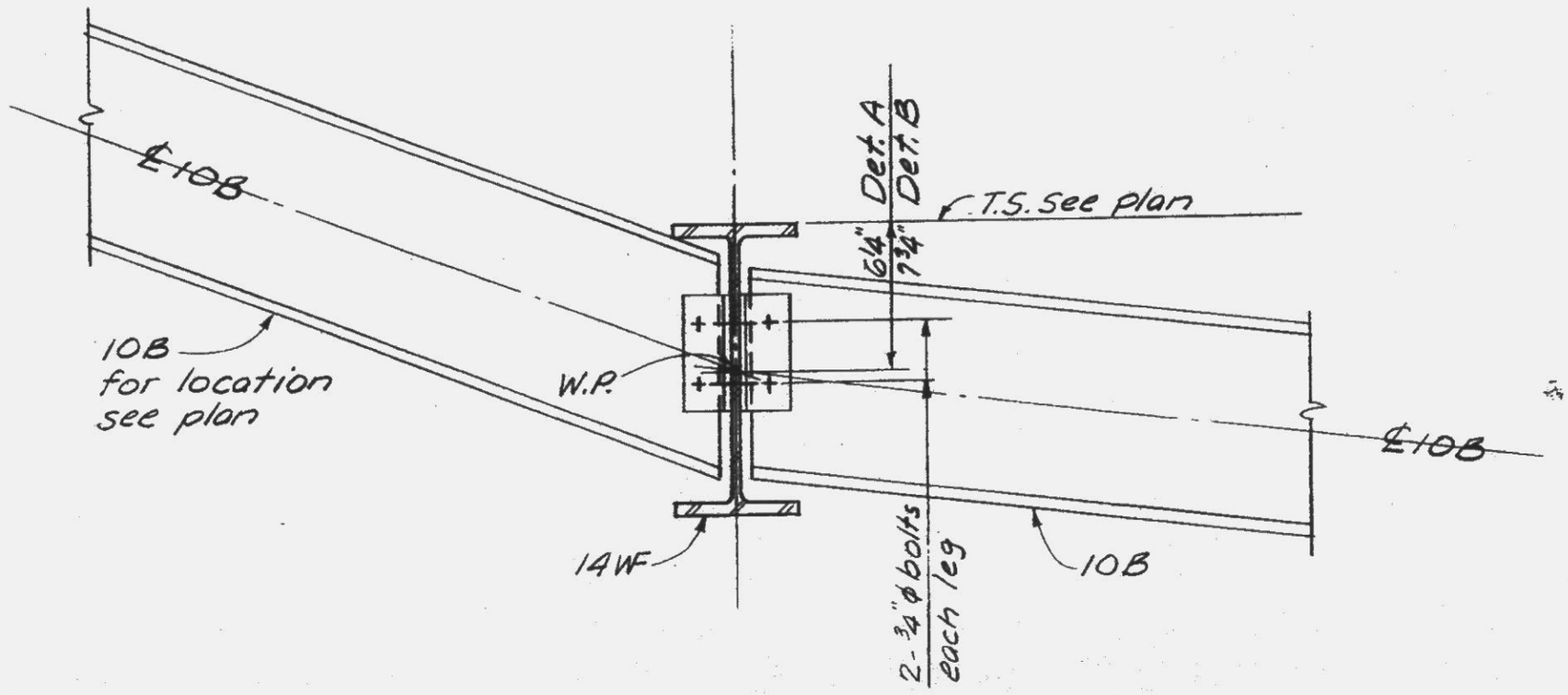

LICENSED PROFESSIONAL ENGINEER
LESLIE E. ROBERTSON
No. 34360
UNIVERSITY OF THE STATE OF NEW YORK

DESIGNED

DRAWN
A. Franqui

REVIEWED

12-JK2-183

SKILLING, HELLE, CHRISTIANSEN, ROBERTSON — Structural & Civil Engineers

PROJECT: THE WORLD TRADE CENTER | TITLE: CONNECTION DETAIL - EL. 332 | DATE: 6-9-72

REVISIONS

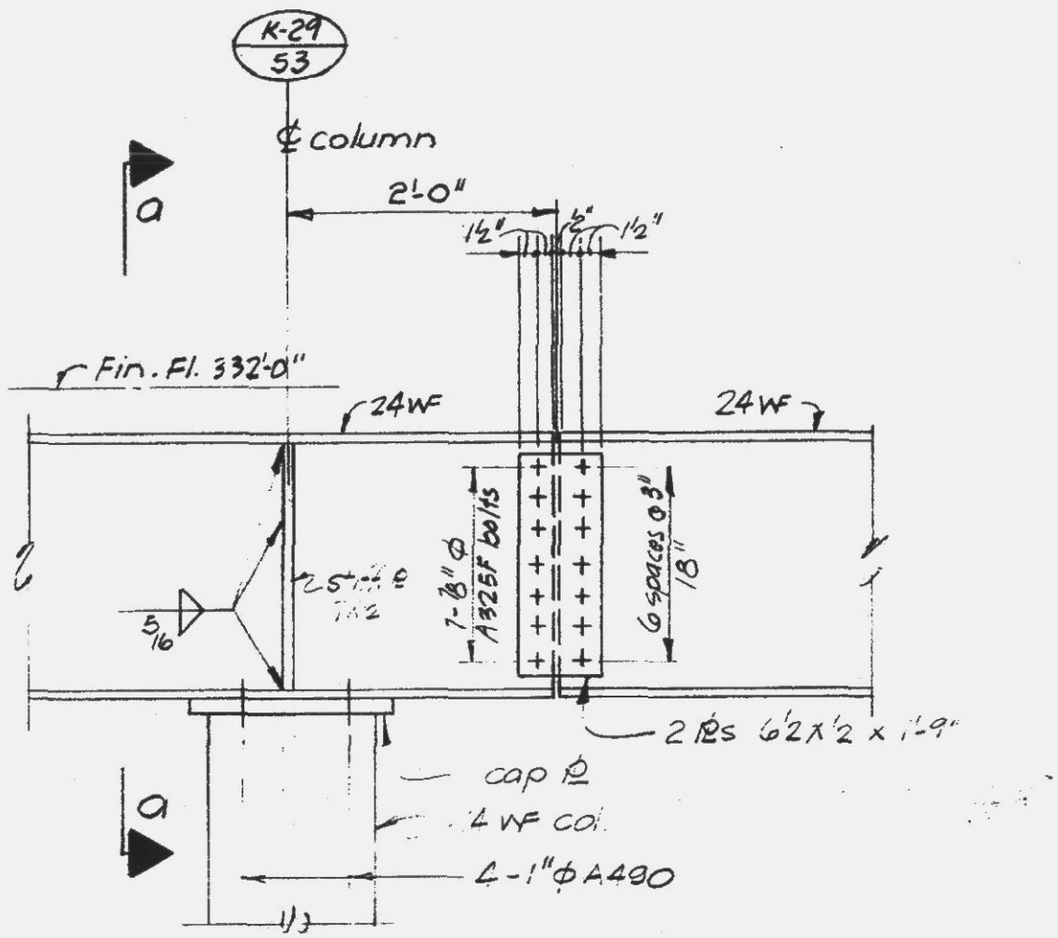

Detail A

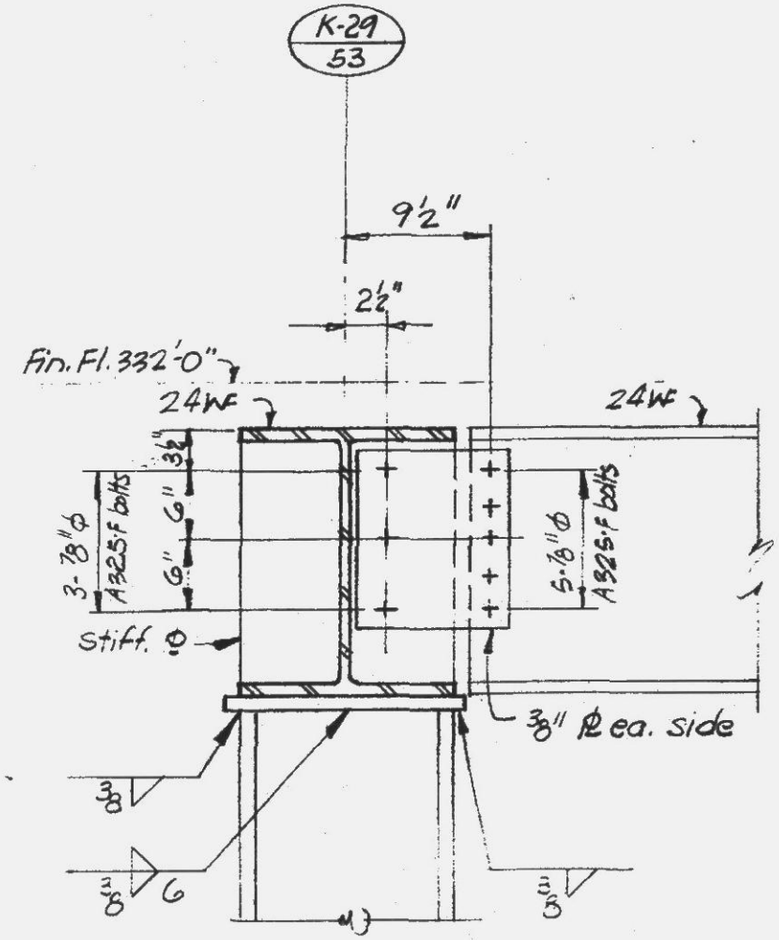

Section a-a

LICENSED PROFESSIONAL ENGINEER
LESLIE E. ROBERTSON
No. 34360
UNIVERSITY OF THE STATE OF NEW YORK

DESIGNED MR

DRAWN

REVIEWED

12-JK2-184

SKILLING, HELLE, CHRISTIANSEN, ROBERTSON — Structural & Civil Engineers

PROJECT: THE WORLD TRADE CENTER | TITLE: DETAIL FOR "NOTCHING" BEAM ALREADY IN PLACE | DATE: 1-23-69

(Per PNYA Change Order 433.013)

REVISIONS

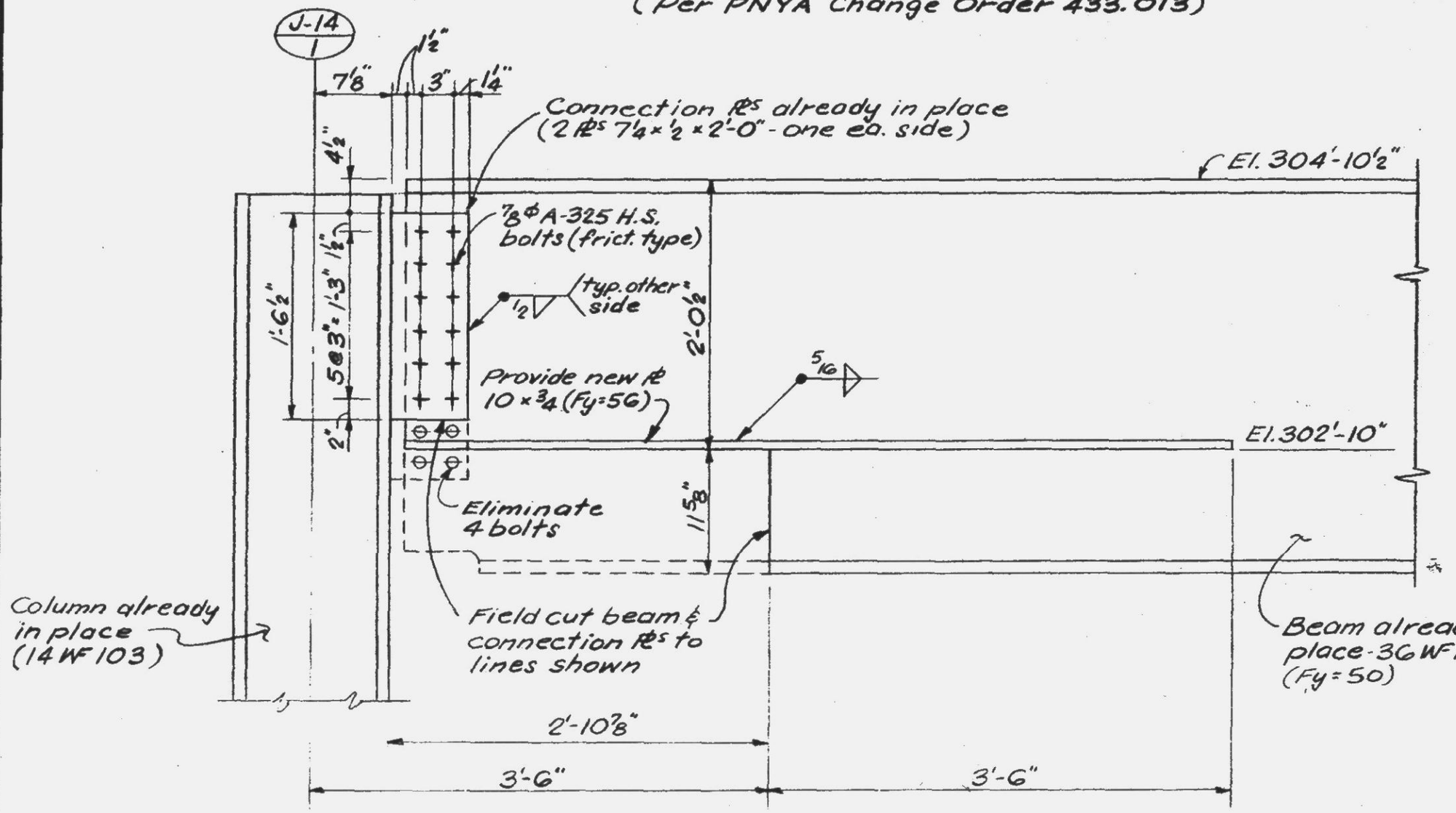

Location of beam — Zone J-3 (street level) East of column J14-1 as shown on Dwg. SJ-93

Notes:

1. All field work to be carried out under contract WTC-230.00 and to be completed before any concreting work in this area.
2. All welds to be E70xx.

LICENSED PROFESSIONAL ENGINEER — LESLIE E. ROBERTSON — No. 34360 — UNIVERSITY OF THE STATE OF NEW YORK

DESIGNED

DRAWN S.C.

REVIEWED E.L.

12-JK2-199